Smart Pet Treat Dispenser

User manual

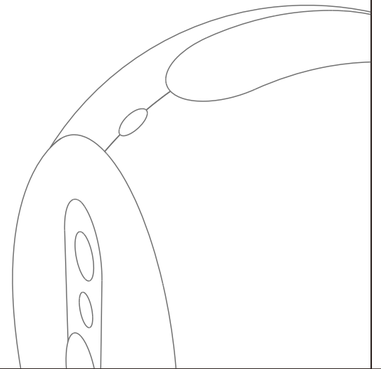

1. Product Structure

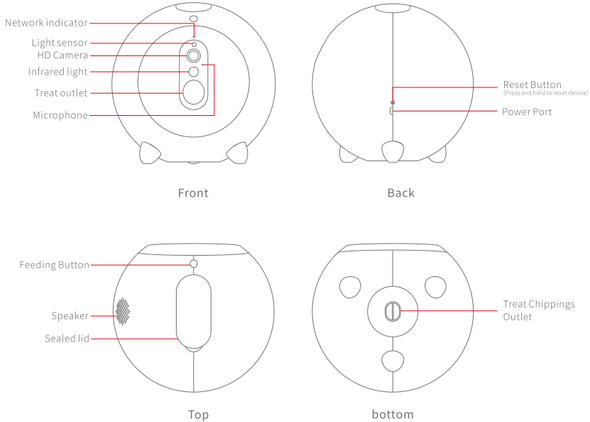

2.How to open treat hopper lid

Magnetic lid, take it off from one side by fingers slightly.(as following figures show)

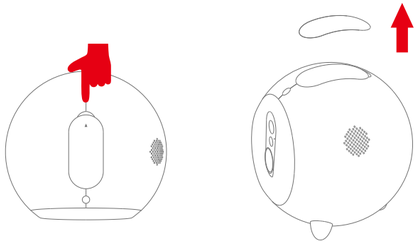

3. Turn on Device

Plug to socket with power adapter, after you hear" welcome to use smart pet feeder, please start quick configuration", please press reset button and hold for about 6 seconds, release till you hear "factory reset, please don't power off".

4. Download and install APP

Android User: Scan below QR code, choose normal download
iOs User: Search "Hipet" at APP Store or scan below QC code.

Attention:

- Please choose those treats with diameter 9-15mm.
- Please clean chippings outlet on time to prevent food jam.
- Please set up device horizontal on table.
- Please keep the equipment environment dry and do not use it in standing water.
- Avoid keeping sunlight toward camera.
- To avoid shooting nothing out when feed, please try to feed 2-4 portion for the first time or after clean device hopper, make sure the device shoot out treat properly.

5. Register and sign in

Open app, please register first, if you already have account, please sign in directly. If you forget password, please click"forget password" to retrieve password.

Fig.1

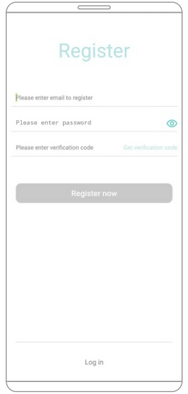

6. Add device

Open app, enter homepage, click "+Add device" -"add a new device"-"observed the above phenomenon"-"Wi-Fi configuration", input Wi-Fi password, waiting for connection(make sure your smart phone connect via 2.4GHz Wi-Fi, you will hear "connect router successfully")

After Wi-Fi connected successfully, please name the device and set password, then device will be shown in Device list.

Fig.2 Fig.3 Fig.4 Fig.5 Fig.6

7. Pet live video

Click device name in device list to enter "Live "(Fig.7), then you can operate and setting accordingly.

Fig.7

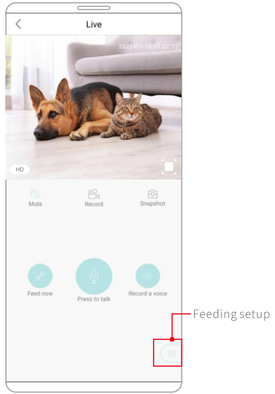

8.Feeding Plan

Click " ⋮" at right of device list, pop out "feeding plan ,settings, playback, delete"(Fig.8.9), click "Feeding plan" to program feeding schedules etc.

Fig.8 Fig.9

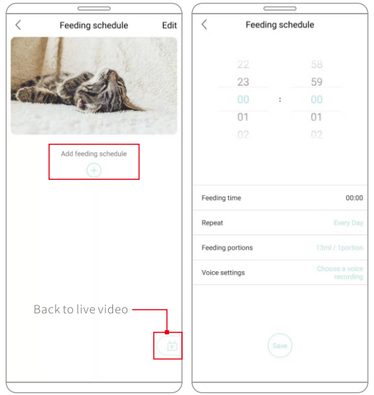

FCC Warning

This device complies with part 15 of the FCC Rules. Operation is subject to the following two conditions: (1) This device may not cause harmful interference, and (2) this device must accept any interference received, including interference that may cause undesired operation.

Any Changes or modifications not expressly approved by the party responsible for compliance could void the user's authority to operate the equipment.

This equipment complies with FCC radiation exposure limits set forth for an uncontrolled environment. This equipment should be installed and operated with minimum distance 20cm between the radiator and your body.

Note: This equipment has been tested and found to comply with the limits for a Class B digital device, pursuant to part 15 of the FCC Rules. These limits are designed to provide reasonable protection against harmful interference in a residential installation. This equipment generates uses and can radiate radio frequency energy and, if not installed and used in accordance with the instructions, may cause harmful interference to radio communications. However, there is no guarantee that interference will not occur in a particular installation. If this equipment does cause harmful interference to radio or television reception, which can be determined by turning the equipment off and on, the user is encouraged to try to correct the interference by one or more of the following measures:

-Reorient or relocate the receiving antenna.

-Increase the separation between the equipment and receiver.

-Connect the equipment into an outlet on a circuit different from that to which the receiver is connected.

-Consult the dealer or an experienced radio/TV technician for help.