Picup Media

GemLightbox Macro

User Manual

Welcome to the GemLightbox Family

Table of Contents

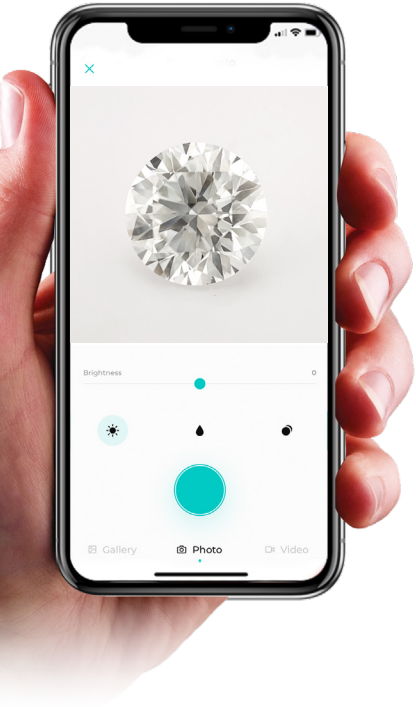

3 Welcome

4 Overview

5 What's Included

6 GemLightbox Macro

7 GemLightbox Application

9 Setting Up

11 Correct Positioning

12 Lighting Options

13 FAQ

15 Join Our Community

16 Appendix

Welcome

We are thrilled to guide you on your first steps to effortless diamond and gemstone photography.

At Picup Media, we've helped over 10,000+ jewelers enter the digital world and hope to share the same experience with you.

This user manual will teach you how to set up and use the GemLightbox Macro, its add-ons, and provide useful tips and tricks to help you capture perfect loose stone videos.

We recommend reading our full tutorial on the following pages to make the most of your GemLightbox Macro experience.

support.picupmedia.com

VISIT THE LINK TO WATCH THE SETUP VIDEO!

Overview

Reflector Cover with built-in macro lens 10x zoom

Height Adjustment

Power On

Smartphone Holder

Depth Adjustment

Different Lighting Options
Sparkles, 5500k, 3500k, 6500k

What's Included

GemLightbox Macro
1pc

International power adapter
1pc

White loose stone table tops
3pcs

Grey loose stone table tops
3pcs

Black loose stone table tops
3pcs

VISIT THE LINK TO WATCH
THE SETUP VIDEO!

GemLightbox Macro

GemLightbox Application

The GemLightbox Application is your all-in-one diamond and loose stone photography companion, and is essential to capturing amazing diamond and loose stone images and videos. Simply follow the steps below to get started:

Google Play Store

iOS App Store

1 Download the Application

The GemLightbox Application is available to download on both the iOS App Store and Google Play Store.

To download, simply search for "GemLightbox" and follow the download instructions, or scan the QR code.

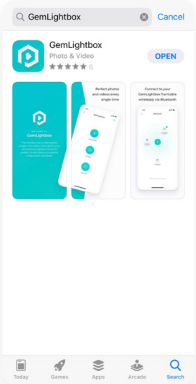

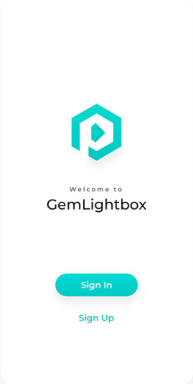

2 Create an Account

Click "Sign Up", then follow the steps to create your GemLightbox Application account.

Please note that only one device may be logged into an account at any time.

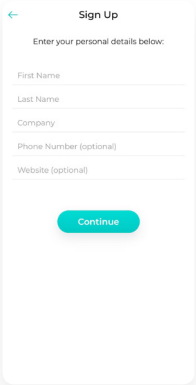

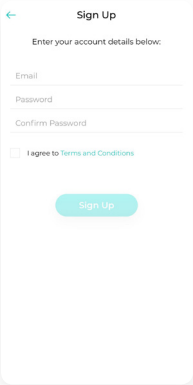

GemLightbox Application

Setting Up

The GemLightbox Application optimizes your smartphone camera settings for jewelry and diamond photography, meaning that you'll capture the best results every time.

The GemLightbox Application connects with your GemLightbox Macro unit directly via Bluetooth. Please ensure that the Bluetooth setting on your smartphone is enabled in order to successfully connect with the GemLightbox Macro.

To learn more about the GemLightbox Application functions and its newest updates, simply visit our online knowledge base at https://support.picupmedia.com for more information.

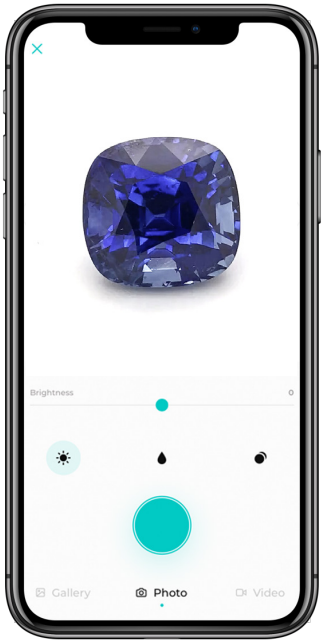

VISIT THE LINK TO WATCH THE SETUP VIDEO!

Watch Setup Video here:

Setting Up

1 Set up the smartphone stand

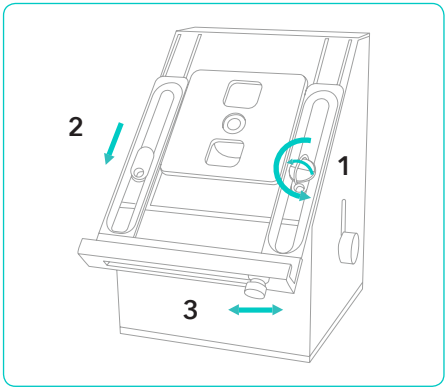

Before you set up the smartphone stand, please ensure to remove the front Macro cover and your smartphone case, if any.

1 Lift the lock counterclockwise to loosen the smartphone holder.
2 Adjust the smartphone holder. Ensure that the smartphone camera lens is pointing right into the Macro lens.
3 Push the width adjuster towards your phone. Lock it by rotating clockwise.

**See Appendix for complete smartphone holder set-up process.*

Once the procedure is complete, we suggest not to change the set-up again for ease of use in the future.

2 Choose the correct loose stone disc

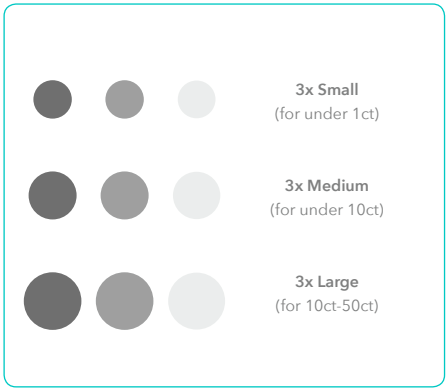

Macro comes with three (3) loose stone discs to match the size of your loose stones.

- Small for stones under 1ct
- Medium for 1 -10ct
- Large for 10ct and above

The loose stone discs come in 3 colors - white, grey, and black.

Simply place the loose stone disc on top of the metal stand inside of the GemLightbox Macro and firmly push down to secure it in place.

Scan here to see more detailed instructions for your phone model

Setting Up

3 Using the adjuster, adjust the height and width

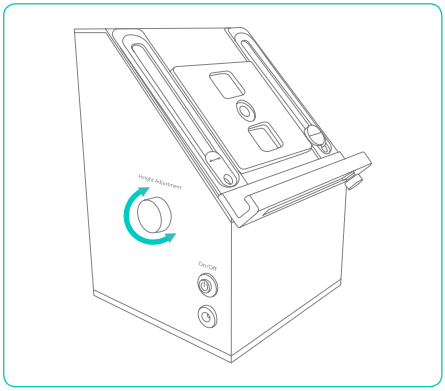

The height adjuster and the depth adjuster on the left and right side of the box allow you to move the center point of the turntable so that you can capture the best angle of your loose stone.

4 Using the Macro lens

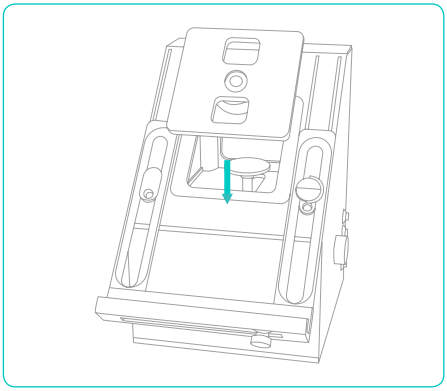

When using the Macro lens, ensure the following:

- The Macro lens is on before starting photography.
- Keep the lens away from water and other liquids.
- Use a microfiber cloth to clean the lens from time to time to ensure the best results.

Scan here to see more detailed instructions for your phone model

Correct Positioning

Correct positioning of your loose stones is critical to the quality of the 360-video. Position the loose stone correctly to capture the details of the gems or diamonds in the best light possible. Follow the steps below for the optimal position.

Use the height and depth adjustment on both sides of the box to adjust the position of the loose stone. Ensure that the stone is not too far backward or too far forward to get the best result.

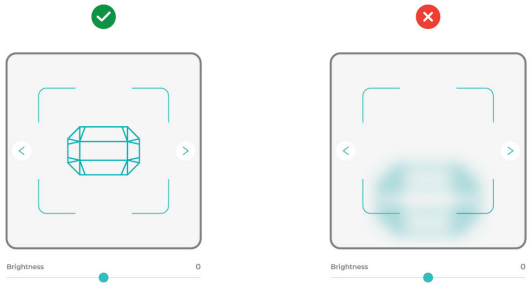

Always position the gem in the center of the disc; otherwise, the gem will be carried farther away from the center of the turntable when it rotates. The disc comes with a groove to mark the center point. Place the gem right on the groove and start shooting.

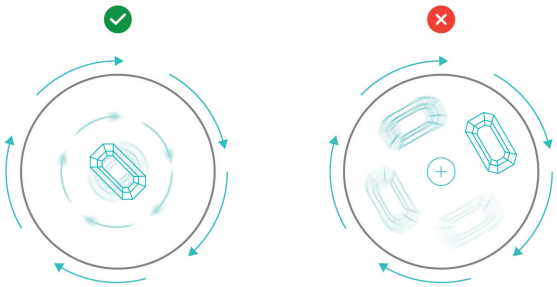

Use the width and height adjustment to position the gemstones closer or farther away from the lens. **Small stones should be moved closer to the lens and large ones farther away from the lens** to achieve the optimal result.

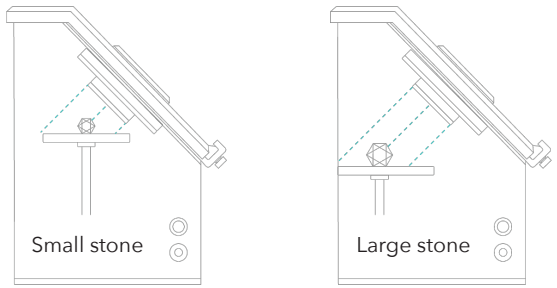

Lighting Options

Perfect lighting in a box!

Different gems require different lighting. The GemLightbox Macro caters to this need by providing a lighting environment with perfect lighting temperature to capture accurate colors of all loose diamonds and gemstones.

Four Lighting Options

Blue Lighting

6500k soft lighting perfect for colored diamonds and semi precious stones.

White Lighting

5500k soft lighting perfect for diamonds and precious stones like sapphires.

Sparkles

A direct set of 5500k lights that bring out the natural sparkles.

Yellow Lighting

3500k soft lighting perfect for emeralds, rubies, and alexandrites.

VISIT THE LINK TO WATCH THE SETUP VIDEO!

Watch GemLightbox Macro Lighting Options here :

Frequently Asked Questions

1. What is the best lighting setup to use?

Macro has four (4) lighting setups – Sparkles, White, Blue, and Yellow.

Ninety percent (90%) of the time, we will use the White light alone.

If you want to add sparkles to your diamond, you may turn on the Sparkle light without switching the white light off. Use the Blue and Yellow light for colored stones and diamonds as needed.

2. How do I clean the GemLightbox Macro?

The GemLightbox Macro is made from durable materials. It is easy to clean. You may use any non-toxic, acidic cleaners for regular cleaning, but always spray your cleaning product onto a micro-fiber cloth, then use this cloth to wipe the surfaces of your GemLightbox Macro. Never apply or spray cleaning products directly onto it.

3. Where can I check the warranty?

Unless specified by your country, the GemLightbox Macro comes with a one (1) year warranty.

To find our Warranty Policy, please visit the following page. https://bit.ly/3olSFLw

Check the Warranty Policy here:

4. How do I contact Support?

You can contact Picup Media by visiting the following link: https://picupmedia.com/contact-us/

Our Support Team operates 24/7.

5. Can I put jewelry inside of the GemLightbox Macro?

The GemLightbox Macro is made specifically for loose stones and, therefore, not suitable for jewelry. If you are looking for a jewelry photography solution, please check out the appropriate GemLightbox solution here: https://picupmedia.com/shop-page/

6. What is the maximum size of the stone that can fit inside GemLightbox Macro?

The GemLightbox Macro can capture almost all common sizes of stones on the market, from as small as 0.1ct to 50 ct in size.

Please observe the country-specific disposal requirements

Join Our Community

Share your beautiful jewelry images with thousands of other GemLightbox users on our fan pages:

Join our #GemLightbox family

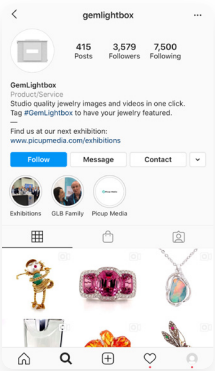

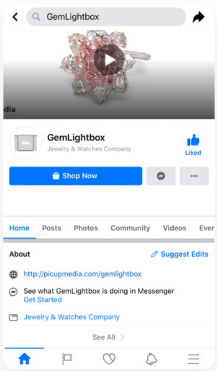

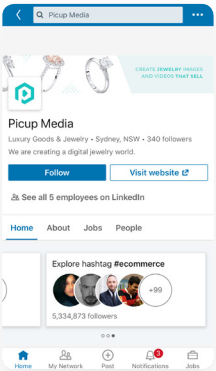

Appendix

To set-up your smartphone holder properly, follow the detailed process below.

1. Pull down the smartphone holder. Ensure that the double-sided arrow on the left side of the holder is pointed to the exact height measurement of your phone.

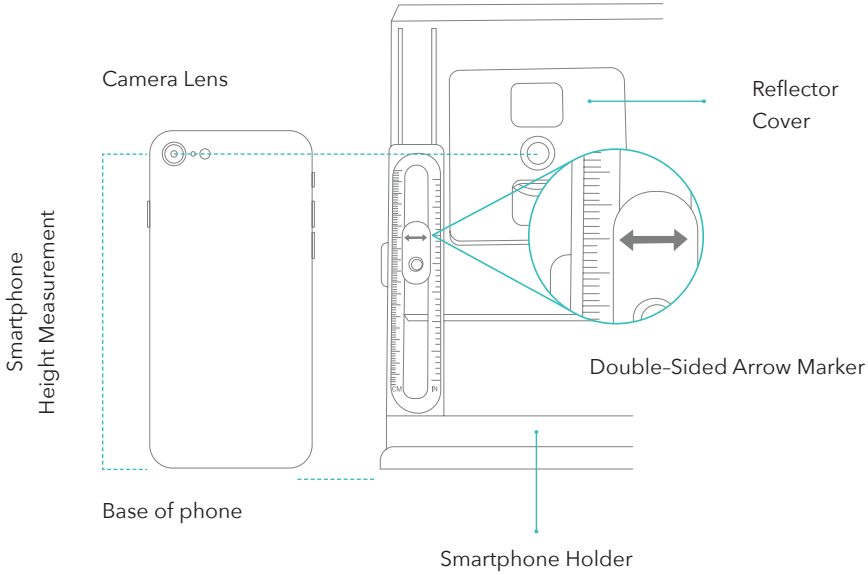

Scan here to see more detailed instructions for your phone model

Appendix

2. Rotate the lock clockwise and push it down to secure the holder.

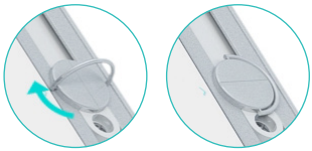

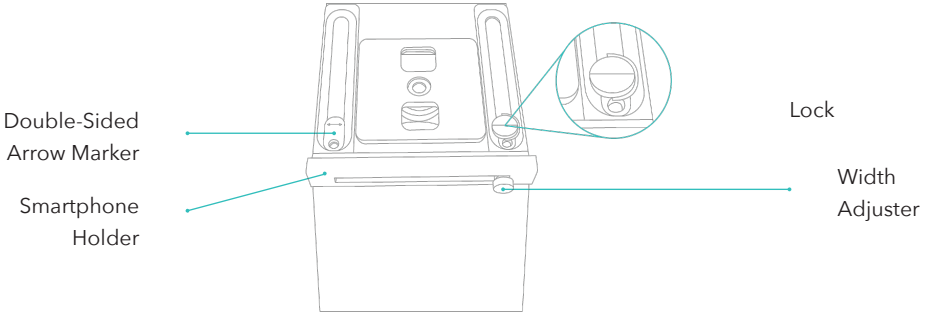

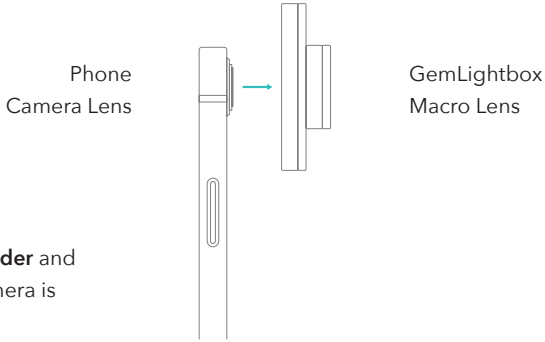

3. Place your smartphone on the holder and move sideways until your phone camera is pointing right into the lens.

Does your phone have more than 1 camera?

We have listed the measurements based on different smartphone devices. Simply visit **support.picupmedia.com** to find out the length you should be using for your smartphone.

Scan here to see more detailed instructions for your phone model

FCC Statement

This equipment has been tested and found to comply with the limits for a Class B digital device, pursuant to Part 15 of the FCC Rules. These limits are designed to provide reasonable protection against harmful interference in a residential installation. This equipment generates uses and can radiate radio frequency energy and, if not installed and used in accordance with the instructions, may cause harmful interference to radio communications. However, there is no guarantee that interference will not occur in a particular installation. If this equipment does cause harmful interference to radio or television reception, which can be determined by turning the equipment off and on, the user is encouraged to try to correct the interference by one or more of the following measures:

-- Reorient or relocate the receiving antenna.

-- Increase the separation between the equipment and receiver.

-- Connect the equipment into an outlet on a circuit different from that to which the receiver is connected.

-- Consult the dealer or an experienced radio/TV technician for help.

This device complies with FCC Part 15 Rules. Operation is subject to the following two conditions:(1) This device may not cause harmful interference, and (2) this device must accept any interference received, including interference that may cause undesired operation.

Changes or modifications not expressly approved by the party responsible for compliance could void the user's authority to operate the equipment.

Picup Media

Thank you

for choosing GemLightbox

Please observe the country-specific disposal requirements

SUPPORT.PICUPMEDIA.COM