TEST REPORT

Product	:	Projector
Trade mark	:	N/A
Model/Type reference	:	A3, A1, A2, A4, A5, A6, A7, A8, A9, A10, Q5, Q6, Q7, Q8, Q9, Q10, Q11, Q12, Q13, Q14
Serial Number	:	N/A
Report Number	:	EED32M80097101
FCC ID	:	2AYUS-A3
Date of Issue	:	Mar. 17, 2021
Test Standards	:	47 CFR Part 15 Subpart C
Test result	:	PASS

Prepared for:

Shenzhen Bonage Technology Co., Ltd.
Room 601, No.6, Jianghao Industrial Zone, No. 430, Jihua Road, Bantian, Longgang, Shenzhen,China

Prepared by:

Centre Testing International Group Co., Ltd.
Hongwei Industrial Zone, Bao'an 70 District, Shenzhen, Guangdong, China
TEL: +86-755-3368 3668
FAX: +86-755-3368 3385

Compiled by: Vita. he Reviewed by: Aaron Ma

Aaron Ma

Approved by: David Wang Date: Mar. 17, 2021

David Wang

Check No.:5554261120

2 Contents

Page

1 COVER PAGE 1
2 CONTENTS 2
3 VERSION 3
4 TEST SUMMARY 4
5 GENERAL INFORMATION 5
5.1 CLIENT INFORMATION 5
5.2 GENERAL DESCRIPTION OF EUT 5
5.3 TEST CONFIGURATION 7
5.4 TEST ENVIRONMENT 8
5.5 DESCRIPTION OF SUPPORT UNITS 8
5.8 EQUIPMENT LIST 10
6 TEST RESULTS AND MEASUREMENT DATA 12
6.1 ANTENNA REQUIREMENT 12
6.2 AC POWER LINE CONDUCTED EMISSIONS 13
6.3 MAXIMUM CONDUCTED OUTPUT POWER 16
6.4 20DB EMISSION BANDWIDTH 17
6.5 CARRIER FREQUENCY SEPARATION 18
6.6 NUMBER OF HOPPING CHANNEL 19
6.7 TIME OF OCCUPANCY 20
6.8 BAND EDGE MEASUREMENTS 21
6.9 CONDUCTED SPURIOUS EMISSIONS 22
6.10 OTHER REQUIREMENTS FREQUENCY HOPPING SPREAD SPECTRUM SYSTEM 23
6.11 RADIATED SPURIOUS EMISSION & RESTRICTED BANDS 25
6.11.1 Radiated Emission below 1GHz 28
6.11.2 Transmitter Emission above 1GHz 30
6..11.3 Transmitter Emission at Band edges 33
7 APPENDIX A 49
8 PHOTOGRAPHS OF TEST SETUP 50

3 Version

Version No.	Date	Description
00	Mar. 17, 2021	Original

4 Test Summary

Test Item	Test Requirement	Result
Antenna Requirement	47 CFR Part 15, Subpart C Section 15.203/15.247 (c)	PASS
AC Power Line Conducted Emission	47 CFR Part 15, Subpart C Section 15.207	PASS
Maximum Conducted Output Power	47 CFR Part 15, Subpart C Section 15.247 (b)(1)	PASS
20dB Emission Bandwidth	47 CFR Part 15, Subpart C Section 15.247 (a)(1)	PASS
Carrier Frequency Separation	47 CFR Part 15, Subpart C Section 15.247 (a)(1)	PASS
Number of Hopping Channels	47 CFR Part 15, Subpart C Section 15.247 (a)(1)	PASS
Time of Occupancy	47 CFR Part 15, Subpart C Section 15.247 (a)(1)	PASS
Pseudorandom Frequency Hopping Sequence	47 CFR Part 15, Subpart C Section 15.247(b)(4)	PASS
Band Edge Measurements	47 CFR Part 15, Subpart C Section 15.247(d)	PASS
Conducted Spurious Emissions	47 CFR Part 15, Subpart C Section 15.247(d)	PASS
Radiated Spurious emissions	47 CFR Part 15, Subpart C Section 15.205/15.209	PASS
Restricted bands around fundamental frequency	47 CFR Part 15, Subpart C Section 15.205/15.209	PASS

Remark:
Company Name and Address shown on Report, the sample(s) and sample Information were provided by the applicant who should be responsible for the authenticity which CTI hasn't verified.

Model No.: A3, A1, A2, A4, A5, A6, A7, A8, A9, A10, Q5, Q6, Q7, Q8, Q9, Q10, Q11, Q12, Q13, Q14
Only the model A3 was tested, since the electrical circuit design, layout, components used and internal wiring were identical for the above models, Only model number and colors difference for market reason.

5 General Information

5.1 Client Information

Applicant:	Shenzhen Bonage Technology Co., Ltd.
Address of Applicant:	Room 601, No.6, Jianghao Industrial Zone, No. 430, Jihua Road, Bantian , Longgang, Shenzhen,China
Manufacturer:	Shenzhen Bonage Technology Co., Ltd.
Address of Manufacturer:	Room 601, No.6, Jianghao Industrial Zone, No. 430, Jihua Road, Bantian , Longgang, Shenzhen,China
Factory:	Shenzhen Bonage Technology Co., Ltd.
Address of Factory:	Room 601, No.6, Jianghao Industrial Zone, No. 430, Jihua Road, Bantian , Longgang, Shenzhen,China

5.2 General Description of EUT

Product Name:	Projector
Model No.:	A3
Add Model No.:	A1, A2, A4, A5, A6, A7, A8, A9, A10, Q5, Q6, Q7, Q8, Q9, Q10, Q11, Q12, Q13, Q14
Trade Mark:	N/A
Product Type:	☐ Mobile ☐ Portable ☒ Fix Location
Bluetooth Version:	V4.2
Operation Frequency:	2402MHz~2480MHz
Modulation Technique:	Frequency Hopping Spread Spectrum(FHSS)
Modulation Type:	GFSK, π/4DQPSK
Number of Channel:	79
Hopping Channel Type:	Adaptive Frequency Hopping systems
Antenna Type:	Internal antenna
Antenna Gain:	-0.58 dBi
Power Supply:	AC 120V/60Hz
Test Voltage:	AC 120V/60Hz
Sample Received Date:	Nov. 26, 2020
Sample tested Date:	Nov. 29, 2020 to Feb. 01, 2021

Operation Frequency each of channel							
Channel	Frequency	Channel	Frequency	Channel	Frequency	Channel	Frequency
0	2402MHz	20	2422MHz	40	2442MHz	60	2462MHz
1	2403MHz	21	2423MHz	41	2443MHz	61	2463MHz
2	2404MHz	22	2424MHz	42	2444MHz	62	2464MHz
3	2405MHz	23	2425MHz	43	2445MHz	63	2465MHz
4	2406MHz	24	2426MHz	44	2446MHz	64	2466MHz
5	2407MHz	25	2427MHz	45	2447MHz	65	2467MHz
6	2408MHz	26	2428MHz	46	2448MHz	66	2468MHz
7	2409MHz	27	2429MHz	47	2449MHz	67	2469MHz
8	2410MHz	28	2430MHz	48	2450MHz	68	2470MHz
9	2411MHz	29	2431MHz	49	2451MHz	69	2471MHz
10	2412MHz	30	2432MHz	50	2452MHz	70	2472MHz
11	2413MHz	31	2433MHz	51	2453MHz	71	2473MHz
12	2414MHz	32	2434MHz	52	2454MHz	72	2474MHz
13	2415MHz	33	2435MHz	53	2455MHz	73	2475MHz
14	2416MHz	34	2436MHz	54	2456MHz	74	2476MHz
15	2417MHz	35	2437MHz	55	2457MHz	75	2477MHz
16	2418MHz	36	2438MHz	56	2458MHz	76	2478MHz
17	2419MHz	37	2439MHz	57	2459MHz	77	2479MHz
18	2420MHz	38	2440MHz	58	2460MHz	78	2480MHz
19	2421MHz	39	2441MHz	59	2461MHz		

Note:
In section 15.31(m), regards to the operating frequency range over 10 MHz, the Lowest frequency, the middle frequency, and the highest frequency of channel were selected to perform the test, and the selected channel see below:

Channel	Frequency
The Lowest channel	2402MHz
The Middle channel	2441MHz
The Highest channel	2480MHz

5.3 Test Configuration

EUT Test Software Settings:		
Software:	FCCAssist	
EUT Power Grade:	Default	
Use test software to set the lowest frequency, the middle frequency and the highest frequency keep transmitting of the EUT.		
Mode	Channel	Frequency(MHz)
DH1/DH3/DH5	CH0	2402
	CH39	2441
	CH78	2480
2DH1/2DH3/2DH5	CH0	2402
	CH39	2441
	CH78	2480

5.4 Test Environment

Operating Environment:	
Radiated Spurious Emissions:	
Temperature:	22~25.0 °C
Humidity:	50~55 % RH
Atmospheric Pressure:	1010mbar
Conducted Emissions:	
Temperature:	22~25.0 °C
Humidity:	50~55 % RH
Atmospheric Pressure:	1010mbar
RF Conducted:	
Temperature:	22~25.0 °C
Humidity:	50~55 % RH
Atmospheric Pressure:	1010mbar

5.5 Description of Support Units

The EUT has been tested with associated equipment below.

Associated equipment name		Manufacture	model	S/N serial number	Supplied by	Certification
AE	Notebook	DELL	DELL 3490	D245DX2	DELL	CE&FCC

5.6 Test Location

All tests were performed at:

Centre Testing International Group Co., Ltd
Building C, Hongwei Industrial Park Block 70, Bao'an District, Shenzhen, China
Telephone: +86 (0) 755 33683668 Fax:+86 (0) 755 33683385
No tests were sub-contracted.
FCC Designation No.: CN1164

5.7 Measurement Uncertainty (95% confidence levels, k=2)

No.	Item	Measurement Uncertainty
1	Radio Frequency	7.9×10^{-8}
2	RF power, conducted	0.46dB (30MHz-1GHz)
		0.55dB (1GHz-18GHz)
3	Radiated Spurious emission test	3.3dB (9kHz-30MHz)
		4.3dB (30MHz-1GHz)
		4.5dB (1GHz-18GHz)
		3.4dB (18GHz-40GHz)
4	Conduction emission	3.5dB (9kHz to 150kHz)
		3.1dB (150kHz to 30MHz)
5	Temperature test	0.64°C
6	Humidity test	3.8%
7	DC power voltages	0.026%

5.8 Equipment List

Conducted disturbance Test					
Equipment	**Manufacturer**	**Model No.**	**Serial Number**	**Cal. date (mm-dd-yyyy)**	**Cal. Due date (mm-dd-yyyy)**
Receiver	R&S	ESCI	100435	04-28-2020	04-27-2021
Temperature/ Humidity Indicator	Defu	TH128	/	---	---
LISN	R&S	ENV216	100098	03-05-2020	03-04-2021
Barometer	changchun	DYM3	1188	---	---

RF test system					
Equipment	**Manufacturer**	**Mode No.**	**Serial Number**	**Cal. Date (mm-dd-yyyy)**	**Cal. Due date (mm-dd-yyyy)**
Spectrum Analyzer	Keysight	N9010A	MY54510339	02-17-2020	02-16-2021
Signal Generator	Keysight	N5182B	MY53051549	02-17-2020	02-16-2021
Temperature/ Humidity Indicator	biaozhi	HM10	1804186	06-29-2020	06-28-2021
High-pass filter	Sinoscite	FL3CX03WG18 NM12-0398-002	---	---	---
High-pass filter	MICRO-TRONICS	SPA-F-63029-4	---	---	---
DC Power	Keysight	E3642A	MY56376072	02-17-2020	02-16-2021
PC-1	Lenovo	R4960d	---	---	---
Power unit	R&S	OSP120	101374	02-17-2020	02-16-2021
RF control unit	JS Tonscend	JS0806-2	158060006	02-17-2020	02-16-2021
BT&WI-FI Automatic test software	JS Tonscend	JS1120-3	---	---	---

3M Semi/full-anechoic Chamber					
Equipment	**Manufacturer**	**Model No.**	**Serial Number**	**Cal. date (mm-dd-yyyy)**	**Cal. Due date (mm-dd-yyyy)**
3M Chamber & Accessory Equipment	TDK	SAC-3	---	05-24-2019	05-23-2022
TRILOG Broadband Antenna	Schwarzbeck	VULB9163	9163-618	05-16-2020	05-15-2021
Loop Antenna	Schwarzbeck	FMZB 1519B	1519B-076	04-25-2018	04-24-2021
Receiver	R&S	ESCI7	100938-003	10-16-2020	10-15-2021
Multi device Controller	maturo	NCD/070/10711 112	---	---	---
Temperature/ Humidity Indicator	Shanghai qixiang	HM10	1804298	06-29-2020	06-28-2021
Cable line	Fulai(7M)	SF106	5219/6A	---	---
Cable line	Fulai(6M)	SF106	5220/6A	---	---
Cable line	Fulai(3M)	SF106	5216/6A	---	---
Cable line	Fulai(3M)	SF106	5217/6A	---	---

3M full-anechoic Chamber					
Equipment	**Manufacturer**	**Model No.**	**Serial Number**	**Cal. date (mm-dd-yyyy)**	**Cal. Due date (mm-dd-yyyy)**
RSE Automatic test software	JS Tonscend	JS36-RSE	10166	---	---
Receiver	Keysight	N9038A	MY57290136	03-05-2020	03-04-2021
Spectrum Analyzer	Keysight	N9020B	MY57111112	03-05-2020	03-04-2021
Spectrum Analyzer	Keysight	N9030B	MY57140871	03-05-2020	03-04-2021
TRILOG Broadband Antenna	Schwarzbeck	VULB 9163	9163-1148	04-25-2018	04-24-2021
Horn Antenna	Schwarzbeck	BBHA 9170	9170-832	04-25-2018	04-24-2021
Horn Antenna	ETS-LINDGREN	3117	00057407	07-10-2018	07-09-2021
Preamplifier	EMCI	EMC184055SE	980596	05-20-2020	05-19-2021
Preamplifier	EMCI	EMC001330	980563	04-22-2020	04-21.2021
Preamplifier	JS Tonscend	980380	EMC051845 SE	01-09-2020 01-08-2021	01-08-2021 01-07-2022
Temperature/ Humidity Indicator	biaozhi	GM1360	EE1186631	04-27-2020	04.26-2021
Fully Anechoic Chamber	TDK	FAC-3	---	01-17-2018 01-09-2021	01-16-2021 01-08-2024
Filter bank	JS Tonscend	JS0806-F	188060094	04-10-2018	04-09-2021
Cable line	Times	SFT205-NMSM-2.50M	394812-0001	---	---
Cable line	Times	SFT205-NMSM-2.50M	394812-0002	---	---
Cable line	Times	SFT205-NMSM-2.50M	394812-0003	---	---
Cable line	Times	SFT205-NMSM-2.50M	393495-0001	---	---
Cable line	Times	EMC104-NMNM-1000	SN160710	---	---
Cable line	Times	SFT205-NMSM-3.00M	394813-0001	---	---
Cable line	Times	SFT205-NMNM-1.50M	381964-0001	---	---
Cable line	Times	SFT205-NMSM-7.00M	394815-0001	---	---
Cable line	Times	HF160-KMKM-3.00M	393493-0001	---	---

6 Test results and Measurement Data

6.1 Antenna Requirement

Standard requirement:	47 CFR Part 15C Section 15.203 /247(c)
15.203 requirement: An intentional radiator shall be designed to ensure that no antenna other than that furnished by the responsible party shall be used with the device. The use of a permanently attached antenna or of an antenna that uses a unique coupling to the intentional radiator, the manufacturer may design the unit so that a broken antenna can be replaced by the user, but the use of a standard antenna jack or electrical connector is prohibited. 15.247(b) (4) requirement: The conducted output power limit specified in paragraph (b) of this section is based on the use of antennas with directional gains that do not exceed 6 dBi. Except as shown in paragraph (c) of this section, if transmitting antennas of directional gain greater than 6 dBi are used, the conducted output power from the intentional radiator shall be reduced below the stated values in paragraphs (b)(1), (b)(2), and (b)(3) of this section, as appropriate, by the amount in dB that the directional gain of the antenna exceeds 6 dBi.	
EUT Antenna:	Please see Internal photos
The antenna is Internal antenna. The best case gain of the antenna is -0.58 dBi.	

6.2 AC Power Line Conducted Emissions

Test Requirement:	47 CFR Part 15C Section 15.207
Test Method:	ANSI C63.10: 2013
Test Frequency Range:	150kHz to 30MHz
Receiver setup:	RBW=9 kHz, VBW=30 kHz, Sweep time=auto
Limit:	

Frequency range (MHz)	Limit (dBuV)	
	Quasi-peak	Average
0.15-0.5	66 to 56*	56 to 46*
0.5-5	56	46
5-30	60	50

* Decreases with the logarithm of the frequency.

Test Setup:

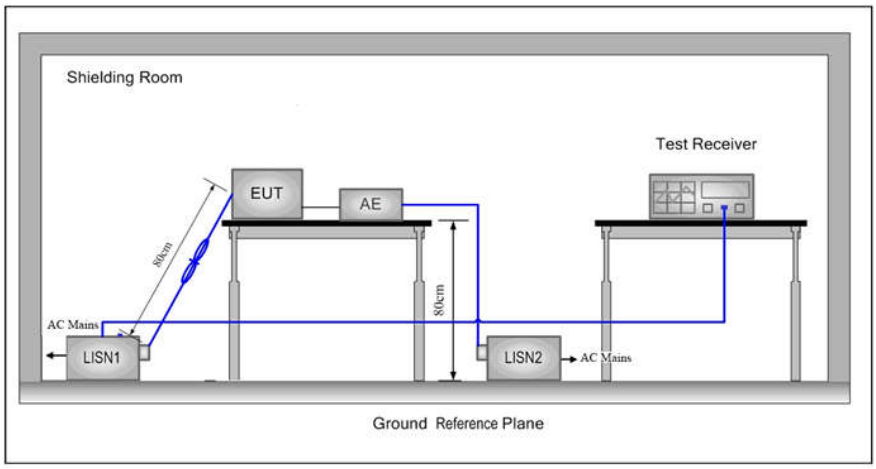

Test Procedure:

1) The mains terminal disturbance voltage test was conducted in a shielded room.
2) The EUT was connected to AC power source through a LISN 1 (Line Impedance Stabilization Network) which provides a 50Ω/50μH + 5Ω linear impedance. The power cables of all other units of the EUT were connected to a second LISN 2, which was bonded to the ground reference plane in the same way as the LISN 1 for the unit being measured. A multiple socket outlet strip was used to connect multiple power cables to a single LISN provided the rating of the LISN was not exceeded.
3) The tabletop EUT was placed upon a non-metallic table 0.8m above the ground reference plane. And for floor-standing arrangement, the EUT was placed on the horizontal ground reference plane,
4) The test was performed with a vertical ground reference plane. The rear of the EUT shall be 0.4 m from the vertical ground reference plane. The vertical ground reference plane was bonded to the horizontal ground reference plane. The LISN 1 was placed 0.8 m from the boundary of the unit under test and bonded to a ground reference plane for LISNs mounted on top of the ground reference plane. This distance was between the closest points of the LISN 1 and the EUT. All other units of the EUT and associated equipment was at least 0.8 m from the LISN 2.
5) In order to find the maximum emission, the relative positions of equipment and all of the interface cables must be changed according to ANSI C63.10: 2013 on conducted measurement.

Exploratory Test Mode:	Non-hopping transmitting mode with all kind of modulation and all kind of data type at the lowest, middle, high channel.
Final Test Mode:	Through Pre-scan, find the DH5 of data type and GFSK modulation at the lowest channel is the worst case. Only the worst case is recorded in the report.
Test Results:	Pass

Measurement Data

Live line:

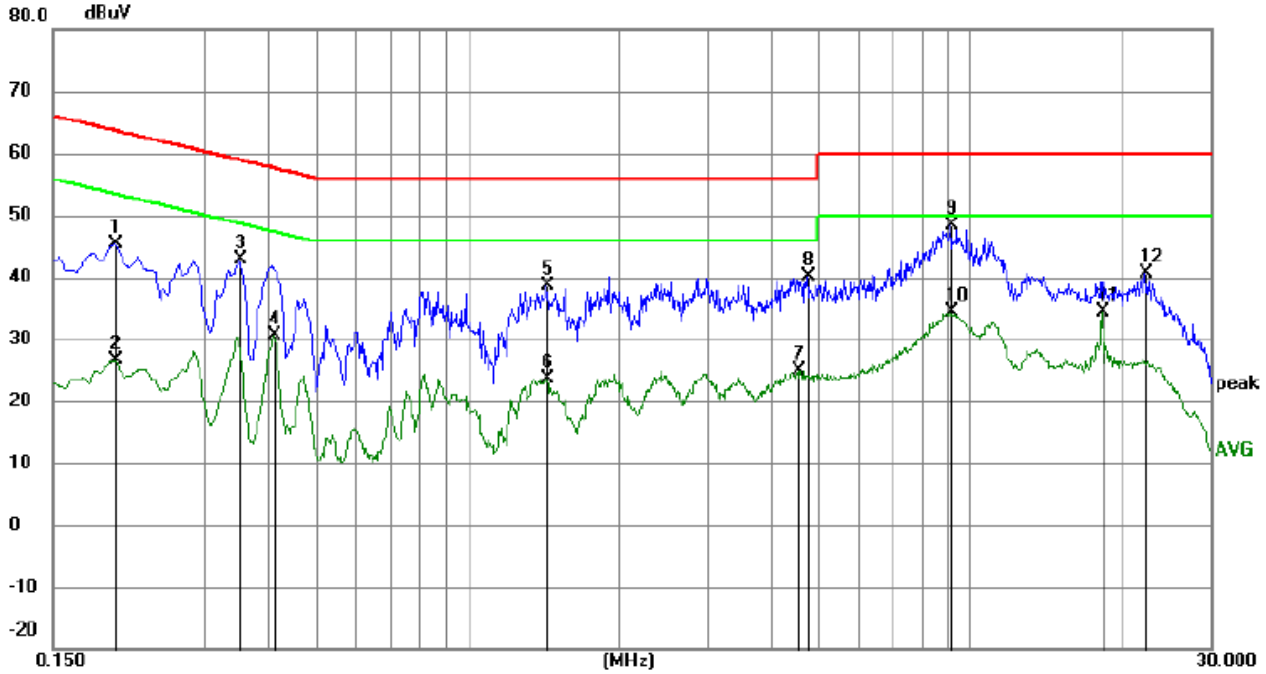

No.	Mk.	Freq.	Reading Level	Correct Factor	Measure-ment	Limit	Margin		
		MHz	dBuV	dB	dBuV	dBuV	dB	Detector	Comment
1		0.1995	35.51	9.87	45.38	63.63	-18.25	peak	
2		0.1995	16.65	9.87	26.52	53.63	-27.11	AVG	
3		0.3525	32.94	10.02	42.96	58.90	-15.94	peak	
4		0.4110	20.74	9.97	30.71	47.63	-16.92	AVG	
5		1.4370	28.91	9.81	38.72	56.00	-17.28	peak	
6		1.4370	13.72	9.81	23.53	46.00	-22.47	AVG	
7		4.5510	15.16	9.78	24.94	46.00	-21.06	AVG	
8		4.7265	30.44	9.78	40.22	56.00	-15.78	peak	
9	*	9.1365	38.61	9.78	48.39	60.00	-11.61	peak	
10		9.1365	24.68	9.78	34.46	50.00	-15.54	AVG	
11		18.2580	24.49	9.96	34.45	50.00	-15.55	AVG	
12		22.2764	30.76	9.98	40.74	60.00	-19.26	peak	

Remark:

1. The following Quasi-Peak and Average measurements were performed on the EUT:
2. Final Test Level =Receiver Reading + LISN Factor + Cable Loss.
3. If the Peak value under Average limit, the Average value is not recorded in the report.

Neutral line:

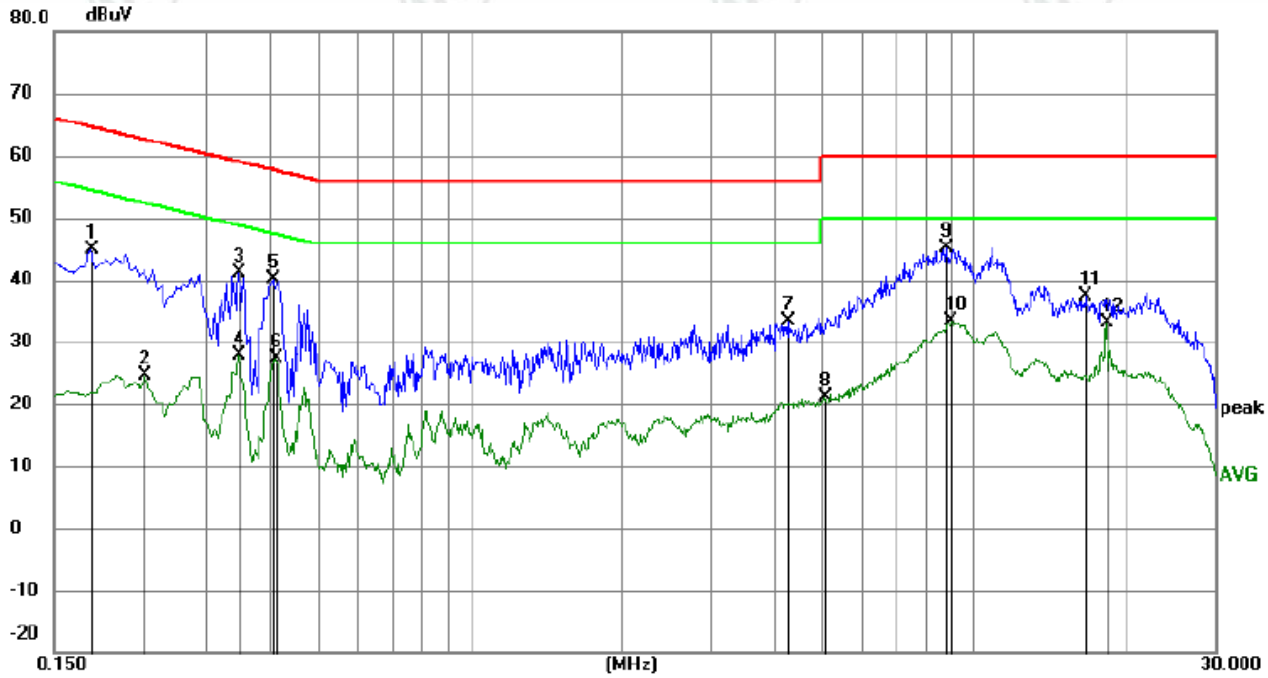

No.	Mk.	Freq.	Reading Level	Correct Factor	Measure-ment	Limit	Margin		
		MHz	dBuV	dB	dBuV	dBuV	dB	Detector	Comment
1		0.1770	35.12	9.87	44.99	64.63	-19.64	peak	
2		0.2265	14.69	9.92	24.61	52.58	-27.97	AVG	
3		0.3480	31.21	10.02	41.23	59.01	-17.78	peak	
4		0.3480	17.88	10.02	27.90	49.01	-21.11	AVG	
5		0.4065	30.11	9.97	40.08	57.72	-17.64	peak	
6		0.4110	17.36	9.97	27.33	47.63	-20.30	AVG	
7		4.2855	23.68	9.78	33.46	56.00	-22.54	peak	
8		5.0370	11.24	9.78	21.02	50.00	-28.98	AVG	
9	*	8.7990	35.27	9.78	45.05	60.00	-14.95	peak	
10		8.9745	23.61	9.78	33.39	50.00	-16.61	AVG	
11		16.6290	27.44	9.94	37.38	60.00	-22.62	peak	
12		18.2535	23.20	9.96	33.16	50.00	-16.84	AVG	

Remark:

1. The following Quasi-Peak and Average measurements were performed on the EUT:
2. Final Test Level =Receiver Reading + LISN Factor + Cable Loss.
3. If the Peak value under Average limit, the Average value is not recorded in the report.

6.3 Maximum Conducted Output Power

Test Requirement:	47 CFR Part 15C Section 15.247 (b)(1)
Test Method:	ANSI C63.10:2013
Test Setup:	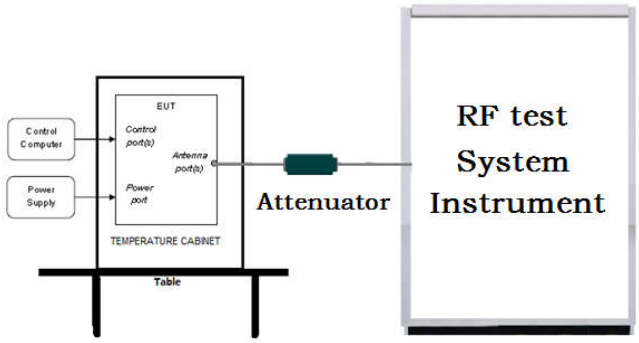 Remark: Offset=Cable loss+ attenuation factor.
Test Procedure:	Use the following spectrum analyzer settings: Span = approximately 5 times the 20 dB bandwidth, centered on a hopping channel RBW > the 20 dB bandwidth of the emission being measured VBW ≥ RBW Sweep = auto Detector function = peak Trace = max hold Allow the trace to stabilize. Use the marker-to-peak function to set the marker to the peak of the emission.
Limit:	21dBm
Exploratory Test Mode:	Non-hopping transmitting with all kind of modulation and all kind of data type
Final Test Mode:	Through Pre-scan, find the DH5 of data type is the worst case of GFSK modulation type, 2-DH5 of data type is the worst case of π/4DQPSK modulation type.
Test Results:	Refer to Appendix A

6.4 20dB Emission Bandwidth

Test Requirement:	47 CFR Part 15C Section 15.247 (a)(1)
Test Method:	ANSI C63.10:2013
Test Setup:	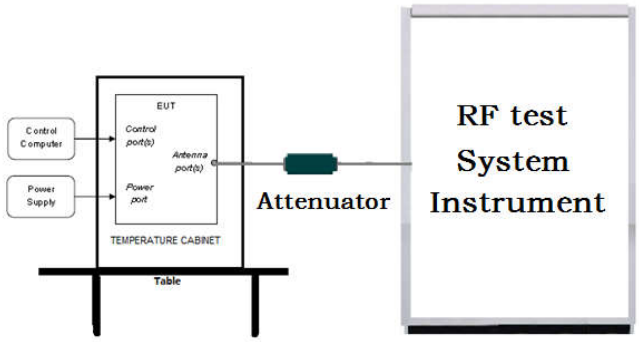 Remark: Offset=Cable loss+ attenuation factor.
Test Procedure:	1. The RF output of EUT was connected to the spectrum analyzer by RF cable and attenuator. The path loss was compensated to the results for each measurement. 2. Set to the maximum power setting and enable the EUT transmit continuously. 3. Use the following spectrum analyzer settings for 20dB Bandwidth measurement. Span = approximately 2 to 5 times the 20 dB bandwidth, centered on a hopping channel; 1%≤RBW ≤5% of the 20 dB bandwidth; VBW≥3RBW; Sweep = auto; Detector function = peak; Trace = max hold. 4. Measure and record the results in the test report.
Limit:	NA
Exploratory Test Mode:	Non-hopping transmitting with all kind of modulation and all kind of data type
Final Test Mode:	Through Pre-scan, find the DH5 of data type is the worst case of GFSK modulation type, 2-DH5 of data type is the worst case of π/4DQPSK modulation type.
Test Results:	Refer to Appendix A

6.5 Carrier Frequency Separation

Test Requirement:	47 CFR Part 15C Section 15.247 (a)(1)
Test Method:	ANSI C63.10:2013
Test Setup:	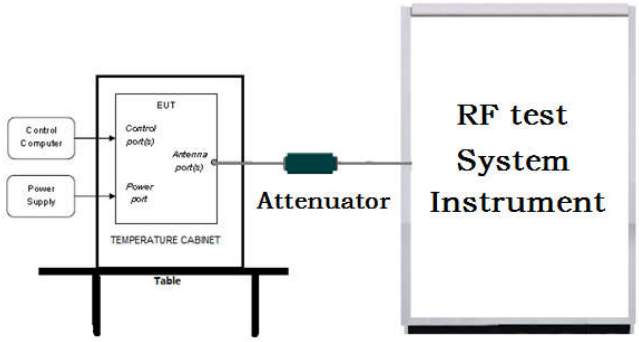 Remark: Offset=Cable loss+ attenuation factor.
Test Procedure:	1. The RF output of EUT was connected to the spectrum analyzer by RF cable and attenuator. The path loss was compensated to the results for each measurement. 2. Set to the maximum power setting and enable the EUT transmit continuously. 3. Enable the EUT hopping function. 4. Use the following spectrum analyzer settings: Span = wide enough to capture the peaks of two adjacent channels; RBW is set to approximately 30% of the channel spacing, adjust as necessary to best identify the center of each individual channel; VBW≥RBW; Sweep = auto; Detector function = peak; Trace = max hold. 5. Use the marker-delta function to determine the separation between the peaks of the adjacent channels. Record the value in report.
Limit:	Frequency hopping systems operating in the 2400-2483.5 MHz band may have hopping channel carrier frequencies that are separated by 25 kHz or two-thirds of the 20 dB bandwidth of the hopping channel, whichever is greater.
Exploratory Test Mode:	Hopping transmitting with all kind of modulation and all kind of data type
Final Test Mode:	Through Pre-scan, find the DH5 of data type is the worst case of GFSK modulation type, 2-DH5 of data type is the worst case of π/4DQPSK modulation type.
Test Results:	Refer to Appendix A

6.6 Number of Hopping Channel

Test Requirement:	47 CFR Part 15C Section 15.247 (a)(1)
Test Method:	ANSI C63.10:2013
Test Setup:	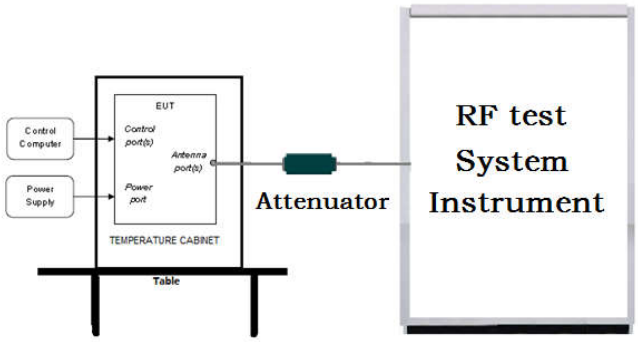 Remark: Offset=Cable loss+ attenuation factor.
Test Procedure:	1. The RF output of EUT was connected to the spectrum analyzer by RF cable and attenuator. The path loss was compensated to the results for each measurement. 2. Set to the maximum power setting and enable the EUT transmit continuously. 3. Enable the EUT hopping function. 4. Use the following spectrum analyzer settings: Span = the frequency band of operation; set the RBW to less than 30% of the channel spacing or the 20 dB bandwidth, whichever is smaller; VBW≥RBW; Sweep= auto; Detector function = peak; Trace = max hold. 5. The number of hopping frequency used is defined as the number of total channel. 6. Record the measurement data in report.
Limit:	Frequency hopping systems in the 2400-2483.5 MHz band shall use at least 15 channels.
Test Mode:	Hopping transmitting with all kind of modulation
Test Results:	Refer to Appendix A

6.7 Time of Occupancy

Test Requirement:	47 CFR Part 15C Section 15.247 (a)(1)
Test Method:	ANSI C63.10:2013
Test Setup:	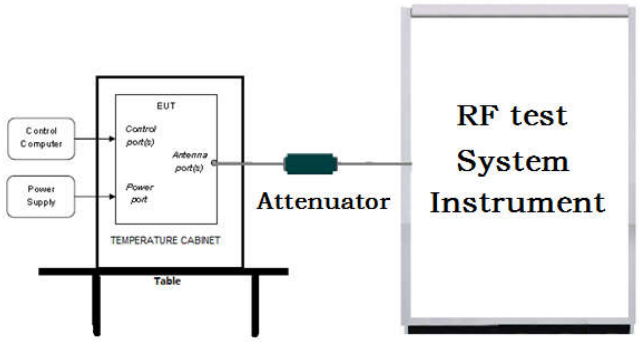 Remark: Offset=Cable loss+ attenuation factor.
Test Procedure:	1. The RF output of EUT was connected to the spectrum analyzer by RF cable and attenuator. The path loss was compensated to the results for each measurement. 2. Set to the maximum power setting and enable the EUT transmit continuously. 3. Enable the EUT hopping function. 4. Use the following spectrum analyzer settings: Span = zero span, centered on a hopping channel; RBW shall be ≤ channel spacing and where possible RBW should be set >> 1 / T, where T is the expected dwell time per channel; VBW≥RBW; Sweep = as necessary to capture the entire dwell time per hopping channel; Detector function = peak; Trace = max hold. 5. Measure and record the results in the test report.
Limit:	The average time of occupancy on any channel shall not be greater than 0.4 seconds within a period of 0.4 seconds multiplied by the number of hopping channels employed.
Test Mode:	Hopping transmitting with all kind of modulation and all kind of data type.
Test Results:	Refer to Appendix A

6.8 Band edge Measurements

Test Requirement:	47 CFR Part 15C Section 15.247 (d)
Test Method:	ANSI C63.10:2013
Test Setup:	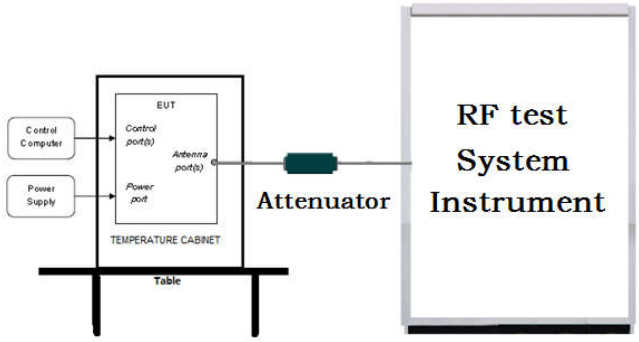 Remark: Offset=Cable loss+ attenuation factor.
Test Procedure:	1. Set to the maximum power setting and enable the EUT transmit continuously. 2. Set RBW = 100 kHz, VBW = 300 kHz (≥RBW). Band edge emissions must be at least 20 dB down from the highest emission level within the authorized band as measured with a 100kHz RBW. The attenuation shall be 30 dB instead of 20 dB when RMS conducted output power procedure is used. 3. Enable hopping function of the EUT and then repeat step 2 and 3. 4. Measure and record the results in the test report.
Limit:	In any 100 kHz bandwidth outside the frequency band in which the spread spectrum intentional radiator is operating, the radio frequency power that is produced by the intentional radiator shall be at least 20 dB below that in the 100 kHz bandwidth within the band that contains the highest level of the desired power, based on either an RF conducted or a radiated measurement.
Exploratory Test Mode:	Hopping and Non-hopping transmitting with all kind of modulation and all kind of data type
Final Test Mode:	Through Pre-scan, find the DH5 of data type is the worst case of GFSK modulation type, 2-DH5 of data type is the worst case of π/4DQPSK modulation type.
Test Results:	Refer to Appendix A

6.9 Conducted Spurious Emissions

Test Requirement:	47 CFR Part 15C Section 15.247 (d)
Test Method:	ANSI C63.10:2013
Test Setup:	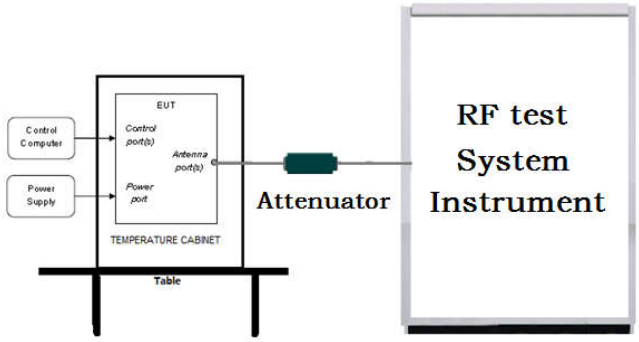 Remark: Offset=Cable loss+ attenuation factor.
Test Procedure:	1. The RF output of EUT was connected to the spectrum analyzer by RF cable and attenuator. The path loss was compensated to the results for each measurement. 2. Set to the maximum power setting and enable the EUT transmit continuously. 3. Set RBW = 100 kHz, VBW = 300kHz, scan up through 10th harmonic. All harmonics / spurs must be at least 20 dB down from the highest emission level within the authorized band as measured with a 100kHz RBW. 4. Measure and record the results in the test report. 5. The RF fundamental frequency should be excluded against the limit line in the operating frequency band.
Limit:	In any 100 kHz bandwidth outside the frequency band in which the spread spectrum intentional radiator is operating, the radio frequency power that is produced by the intentional radiator shall be at least 20 dB below that in the 100 kHz bandwidth within the band that contains the highest level of the desired power, based on either an RF conducted or a radiated measurement.
Exploratory Test Mode:	Non-hopping transmitting with all kind of modulation and all kind of data type
Final Test Mode:	Through Pre-scan, find the DH5 of data type is the worst case of GFSK modulation type, 2-DH5 of data type is the worst case of π/4DQPSK modulation type.
Test Results:	Refer to Appendix A

6.10 Other requirements Frequency Hopping Spread Spectrum System

Test Requirement:	47 CFR Part 15C Section 15.247 (a)(1), (h) requirement:

The system shall hop to channel frequencies that are selected at the system hopping rate from a Pseudorandom ordered list of hopping frequencies. Each frequency must be used equally on the average by each transmitter. The system receivers shall have input bandwidths that match the hopping channel bandwidths of their corresponding transmitters and shall shift frequencies in synchronization with the transmitted signals.

Frequency hopping spread spectrum systems are not required to employ all available hopping channels during each transmission. However, the system, consisting of both the transmitter and the receiver, must be designed to comply with all of the regulations in this section should the transmitter be presented with a continuous data (or information) stream. In addition, a system employing short transmission bursts must comply with the definition of a frequency hopping system and must distribute its transmissions over the minimum number of hopping channels specified in this section.

The incorporation of intelligence within a frequency hopping spread spectrum system that permits the system to recognize other users within the spectrum band so that it individually and independently chooses and adapts its hopsets to avoid hopping on occupied channels is permitted. The coordination of frequency hopping systems in any other manner for the express purpose of avoiding the simultaneous occupancy of individual hopping frequencies by multiple transmitters is not permitted.

Compliance for section 15.247(a)(1)

According to Bluetooth Core Specification, the pseudorandom sequence may be generated in a nine-stage shift register whose 5th and 9th stage
outputs are added in a modulo-two addition stage. And the result is fed back to the input of the first stage. The sequence begins with the first ONE of 9 consecutive ONEs; i.e. the shift register is initialized with nine ones.

- Number of shift register stages: 9
- Length of pseudo-random sequence: 2^9 -1 = 511 bits
- Longest sequence of zeros: 8 (non-inverted signal)

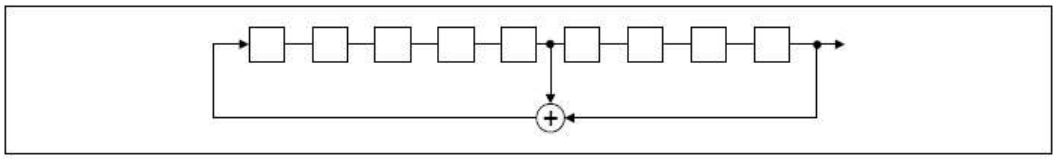

Linear Feedback Shift Register for Generation of the PRBS sequence

An example of Pseudorandom Frequency Hopping Sequence as follow:

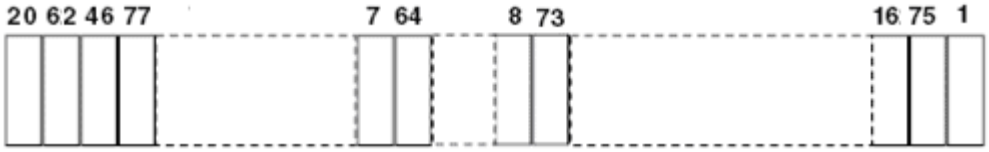

Each frequency used equally on the average by each transmitter.

According to Bluetooth Core Specification, Bluetooth receivers are designed to have input and IF bandwidths that match the hopping channel bandwidths of any Bluetooth transmitters and shift frequencies in synchronization with the transmitted signals.

Compliance for section 15.247(g)

According to Bluetooth Core Specification, the Bluetooth system transmits the packet with the pseudorandom hopping frequency with a continuous data and the short burst transmission from the

Bluetooth system is also transmitted under the frequency hopping system with the pseudorandom hopping frequency system.
Compliance for section 15.247(h)
According to Bluetooth Core specification, the Bluetooth system incorporates with an adaptive system to detect other user within the spectrum band so that it individually and independently to avoid hopping on the occupied channels. According to the Bluetooth Core specification, the Bluetooth system is designed not have the ability to coordinated with other FHSS System in an effort to avoid the simultaneous occupancy of individual hopping frequencies by multiple transmitter.

6.11 Radiated Spurious Emission & Restricted bands

Test Requirement:	47 CFR Part 15C Section 15.209 and 15.205
Test Method:	ANSI C63.10: 2013
Test Site:	Measurement Distance: 3m (Semi-Anechoic Chamber)
Receiver Setup:	

Frequency	Detector	RBW	VBW	Remark
0.009MHz-0.090MHz	Peak	10kHz	30kHz	Peak
0.009MHz-0.090MHz	Average	10kHz	30kHz	Average
0.090MHz-0.110MHz	Quasi-peak	10kHz	30kHz	Quasi-peak
0.110MHz-0.490MHz	Peak	10kHz	30kHz	Peak
0.110MHz-0.490MHz	Average	10kHz	30kHz	Average
0.490MHz -30MHz	Quasi-peak	10kHz	30kHz	Quasi-peak
30MHz-1GHz	Peak	100 kHz	300kHz	Peak
Above 1GHz	Peak	1MHz	3MHz	Peak
	Peak	1MHz	10kHz	Average

Limit:

Frequency	Field strength (microvolt/meter)	Limit (dBuV/m)	Remark	Measurement distance (m)
0.009MHz-0.490MHz	2400/F(kHz)	-	-	300
0.490MHz-1.705MHz	24000/F(kHz)	-	-	30
1.705MHz-30MHz	30	-	-	30
30MHz-88MHz	100	40.0	Quasi-peak	3
88MHz-216MHz	150	43.5	Quasi-peak	3
216MHz-960MHz	200	46.0	Quasi-peak	3
960MHz-1GHz	500	54.0	Quasi-peak	3
Above 1GHz	500	54.0	Average	3

Note: 15.35(b), Unless otherwise specified, the limit on peak radio frequency emissions is 20dB above the maximum permitted average emission limit applicable to the equipment under test. This peak limit applies to the total peak emission level radiated by the device.

Test Setup:	

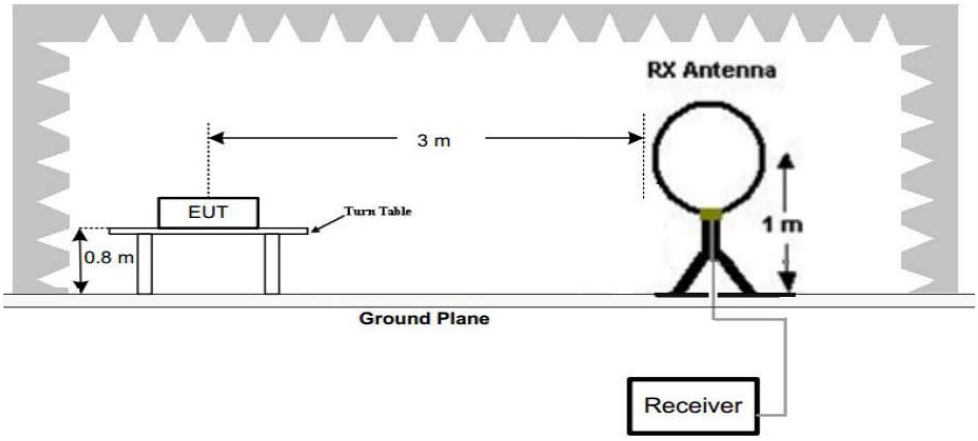

Figure 1. Below 30MHz

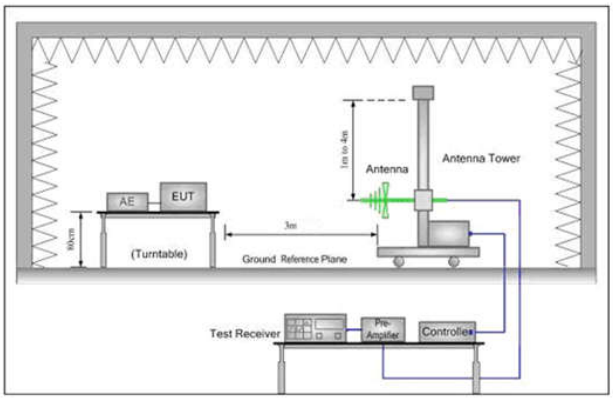

Figure 2. 30MHz to 1GHz

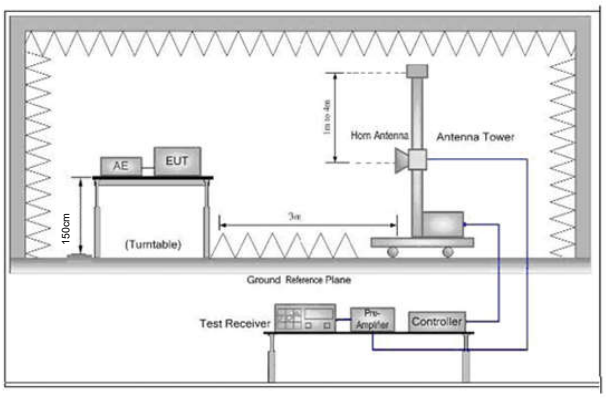

Figure 3. Above 1 GHz

Test Procedure:	a. 1) Below 1G: The EUT was placed on the top of a rotating table 0.8 meters above the ground at a 3 meter semi-anechoic camber. The table was rotated 360 degrees to determine the position of the highest radiation. 2) Above 1G: The EUT was placed on the top of a rotating table 1.5 meters above the ground at a 3 meter semi-anechoic camber. The table was rotated 360 degrees to determine the position of the highest radiation. Note: For the radiated emission test above 1GHz: Place the measurement antenna away from each area of the EUT determined to be a source of emissions at the specified measurement distance, while keeping the measurement antenna aimed at the source of emissions at each frequency of significant emissions, with polarization oriented for maximum response. The measurement antenna may have to be higher or lower than the EUT, depending on the radiation pattern of the emission and staying aimed at the emission source for receiving the maximum signal. The final measurement antenna elevation shall be that which maximizes the emissions. The measurement antenna elevation for maximum emissions shall be restricted to a range of heights of from 1 m to 4 m above the ground or reference ground plane. b. The EUT was set 3 meters away from the interference-receiving antenna, which was mounted on the top of a variable-height antenna tower. c. The antenna height is varied from one meter to four meters above the ground to determine the maximum value of the field strength. Both

	horizontal and vertical polarizations of the antenna are set to make the measurement. d. For each suspected emission, the EUT was arranged to its worst case and then the antenna was tuned to heights from 1 meter to 4 meters (for the test frequency of below 30MHz, the antenna was tuned to heights 1 meter) and the rotatable table was turned from 0 degrees to 360 degrees to find the maximum reading. e. The test-receiver system was set to Peak Detect Function and Specified Bandwidth with Maximum Hold Mode. f. If the emission level of the EUT in peak mode was 10dB lower than the limit specified, then testing could be stopped and the peak values of the EUT would be reported. Otherwise the emissions that did not have 10dB margin would be re-tested one by one using peak, quasi-peak or average method as specified and then reported in a data sheet. g. Test the EUT in the lowest channel (2402MHz),the middle channel (2441MHz),the Highest channel (2480MHz) h. The radiation measurements are performed in X, Y, Z axis positioning for Transmitting mode, and found the X axis positioning which it is the worst case. i. Repeat above procedures until all frequencies measured was complete.
Exploratory Test Mode:	Non-hopping transmitting mode with all kind of modulation and all kind of data type
Final Test Mode:	Through Pre-scan, find the DH5 of data type and GFSK modulation is the worst case. Pretest the EUT at Transmitting mode, For below 1GHz part, through pre-scan, the worst case is the lowest channel. Only the worst case is recorded in the report.
Test Results:	Pass

6.11.1 Radiated Emission below 1GHz

During the test, the Radiates Emission from 30MHz to 1GHz was performed in all modes with all channels, GFSK Channel 2441MHz was selected as the worst condition. The test data of the worst-case condition was recorded in this report.

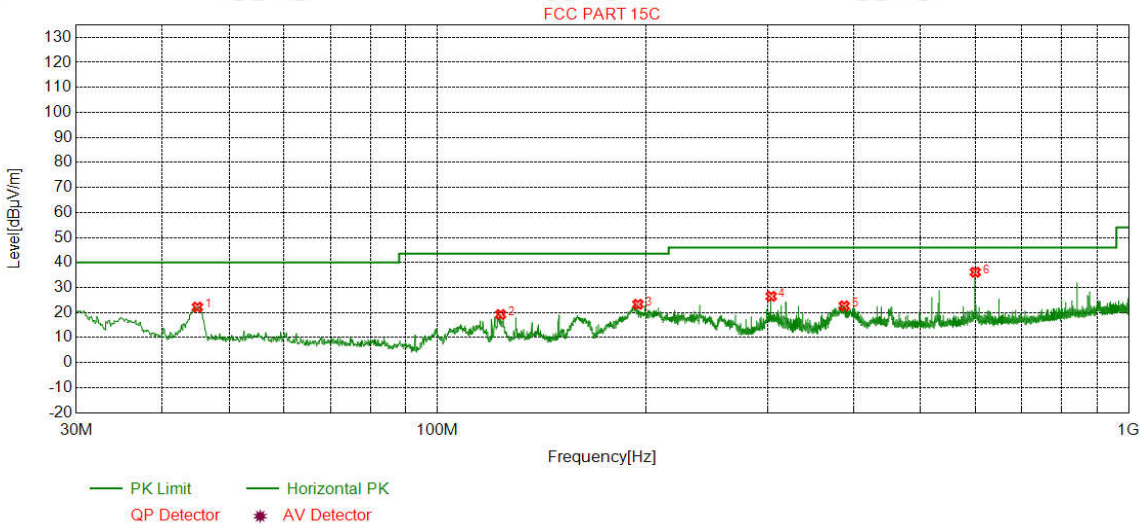

Mode:			GFSK Transmitting					Channel:		2441	
NO	Freq. [MHz]	Ant Factor [dB]	Cable loss [dB]	Pream gain [dB]	Reading [dBμV]	Level [dBμV/m]	Limit [dBμV/m]	Margin [dB]	Result	Polarity	Remark
1	44.9395	13.19	0.75	-31.71	39.95	22.18	40.00	17.82	Pass	H	PK
2	123.4203	8.69	1.31	-32.06	41.29	19.23	43.50	24.27	Pass	H	PK
3	195.0135	10.43	1.64	-31.94	43.19	23.32	43.50	20.18	Pass	H	PK
4	304.0524	13.29	2.07	-31.60	42.74	26.50	46.00	19.50	Pass	H	PK
5	387.6748	15.13	2.34	-31.83	37.03	22.67	46.00	23.33	Pass	H	PK
6	600.0290	19.00	2.96	-31.50	45.67	36.13	46.00	9.87	Pass	H	PK

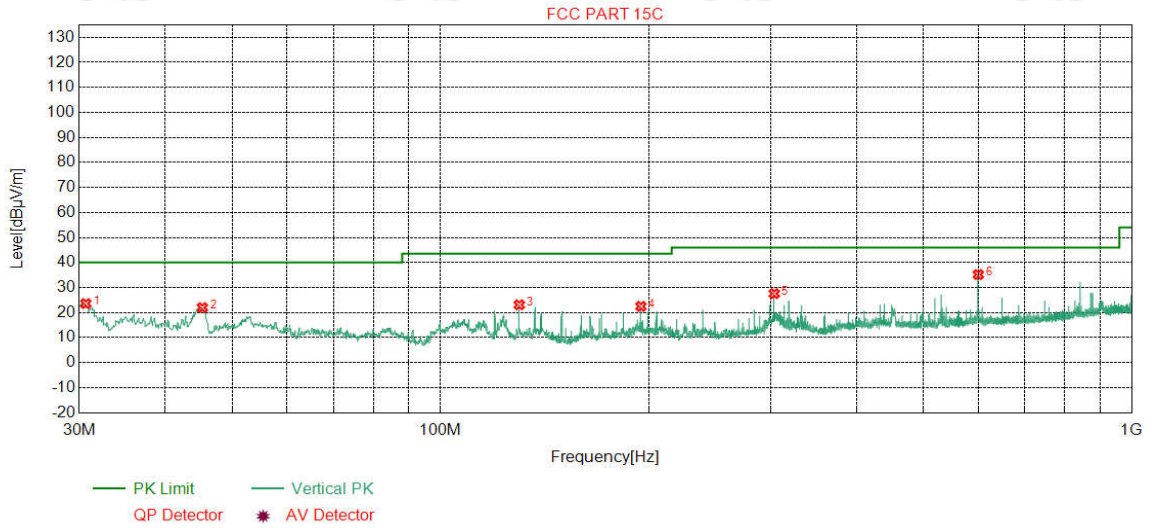

Mode:			GFSK Transmitting					Channel:		2441	
NO	Freq. [MHz]	Ant Factor [dB]	Cable loss [dB]	Pream gain [dB]	Reading [dBμV]	Level [dBμV/m]	Limit [dBμV/m]	Margin [dB]	Result	Polarity	Remark
1	30.6791	10.53	0.63	-31.53	43.95	23.58	40.00	16.42	Pass	V	PK
2	45.2305	13.20	0.75	-31.73	39.75	21.97	40.00	18.03	Pass	V	PK
3	130.0170	7.70	1.33	-32.02	46.10	23.11	43.50	20.39	Pass	V	PK
4	195.0135	10.43	1.64	-31.94	42.36	22.49	43.50	21.01	Pass	V	PK
5	304.0524	13.29	2.07	-31.60	43.82	27.58	46.00	18.42	Pass	V	PK
6	600.0290	19.00	2.96	-31.50	44.73	35.19	46.00	10.81	Pass	V	PK

6.11.2 Transmitter Emission above 1GHz

Mode:			GFSK Transmitting					Channel:		2402	
NO	Freq. [MHz]	Ant Factor [dB]	Cable loss [dB]	Pream gain [dB]	Reading [dBμV]	Level [dBμV/m]	Limit [dBμV/m]	Margin [dB]	Result	Polarity	Remark
1	1029.4029	27.93	2.46	-43.07	50.49	37.81	74.00	36.19	Pass	H	PK
2	1259.6260	28.16	2.69	-42.82	50.49	38.52	74.00	35.48	Pass	H	PK
3	1902.8903	31.06	3.42	-42.96	49.06	40.58	74.00	33.42	Pass	H	PK
4	2690.9691	32.71	4.11	-43.10	49.98	43.70	74.00	30.30	Pass	H	PK
5	3540.0360	33.43	4.45	-43.09	48.81	43.60	74.00	30.40	Pass	H	PK
6	5013.1342	34.51	4.84	-42.80	50.26	46.81	74.00	27.19	Pass	H	PK
7	1155.6156	28.06	2.69	-42.94	50.20	38.01	74.00	35.99	Pass	V	PK
8	2125.5126	31.88	3.62	-43.18	54.21	46.53	74.00	27.47	Pass	V	PK
9	3893.0595	33.71	4.34	-43.01	49.81	44.85	74.00	29.15	Pass	V	PK
10	5015.1343	34.52	4.84	-42.80	50.46	47.02	74.00	26.98	Pass	V	PK
11	6341.2227	35.87	5.46	-42.53	49.00	47.80	74.00	26.20	Pass	V	PK
12	7665.3110	36.53	6.18	-42.13	49.14	49.72	74.00	24.28	Pass	V	PK

Mode:			GFSK Transmitting					Channel:		2441	
N O	Freq. [MHz]	Ant Factor [dB]	Cable loss [dB]	Pream gain [dB]	Readin g [dBμV]	Level [dBμV/m]	Limit [dBμV/m]	Margin [dB]	Result	Polarity	Remark
1	1155.6156	28.06	2.69	-42.94	50.20	38.01	74.00	35.99	Pass	H	PK
2	2125.5126	31.88	3.62	-43.18	54.21	46.53	74.00	27.47	Pass	H	PK
3	3893.0595	33.71	4.34	-43.01	49.81	44.85	74.00	29.15	Pass	H	PK
4	5015.1343	34.52	4.84	-42.80	50.46	47.02	74.00	26.98	Pass	H	PK
5	6341.2227	35.87	5.46	-42.53	49.00	47.80	74.00	26.20	Pass	H	PK
6	7665.3110	36.53	6.18	-42.13	49.14	49.72	74.00	24.28	Pass	H	PK
7	1308.8309	28.21	2.76	-42.77	51.01	39.21	74.00	34.79	Pass	V	PK
8	2128.5129	31.88	3.62	-43.17	53.51	45.84	74.00	28.16	Pass	V	PK
9	2961.7962	33.14	4.44	-43.11	48.62	43.09	74.00	30.91	Pass	V	PK
10	3927.0618	33.74	4.34	-43.01	49.33	44.40	74.00	29.60	Pass	V	PK
11	4881.1254	34.50	4.80	-42.80	50.96	47.46	74.00	26.54	Pass	V	PK
12	7642.3095	36.54	6.14	-42.12	49.27	49.83	74.00	24.17	Pass	V	PK

Mode:			GFSK Transmitting					Channel:		2480	
NO	Freq. [MHz]	Ant Factor [dB]	Cable loss [dB]	Pream gain [dB]	Reading [dBμV]	Level [dBμV/m]	Limit [dBμV/m]	Margin [dB]	Result	Polarity	Remark
1	1241.8242	28.14	2.68	-42.85	50.57	38.54	74.00	35.46	Pass	H	PK
2	1739.0739	29.98	3.22	-42.68	49.06	39.58	74.00	34.42	Pass	H	PK
3	2333.3333	32.17	3.84	-43.14	50.78	43.65	74.00	30.35	Pass	H	PK
4	3749.0499	33.60	4.35	-43.05	50.12	45.02	74.00	28.98	Pass	H	PK
5	5014.1343	34.51	4.84	-42.79	51.77	48.33	74.00	25.67	Pass	H	PK
6	6380.2253	35.88	5.37	-42.53	49.51	48.23	74.00	25.77	Pass	H	PK
7	1129.4129	28.03	2.64	-42.97	50.28	37.98	74.00	36.02	Pass	V	PK
8	2124.9125	31.87	3.61	-43.17	55.40	47.71	74.00	26.29	Pass	V	PK
9	4248.0832	34.15	4.51	-42.90	51.45	47.21	74.00	26.79	Pass	V	PK
10	4956.1304	34.50	4.82	-42.80	53.27	49.79	74.00	24.21	Pass	V	PK
11	6009.2006	35.80	5.32	-42.60	49.16	47.68	74.00	26.32	Pass	V	PK
12	7443.2962	36.54	5.85	-42.11	49.21	49.49	74.00	24.51	Pass	V	PK

Mode:			π/4DQPSK Transmitting					Channel:		2402	
NO	Freq. [MHz]	Ant Factor [dB]	Cable loss [dB]	Pream gain [dB]	Reading [dBμV]	Level [dBμV/m]	Limit [dBμV/m]	Margin [dB]	Result	Polarity	Remark
1	1256.0256	28.16	2.69	-42.84	50.05	38.06	74.00	35.94	Pass	H	PK
2	1874.4874	30.87	3.40	-42.89	49.50	40.88	74.00	33.12	Pass	H	PK
3	2429.1429	32.30	3.95	-43.11	50.66	43.80	74.00	30.20	Pass	H	PK
4	3921.0614	33.74	4.34	-43.02	49.05	44.11	74.00	29.89	Pass	H	PK
5	5014.1343	34.51	4.84	-42.79	50.16	46.72	74.00	27.28	Pass	H	PK
6	7650.3100	36.54	6.15	-42.13	49.41	49.97	74.00	24.03	Pass	H	PK
7	1253.4253	28.15	2.68	-42.83	50.20	38.20	74.00	35.80	Pass	V	PK
8	2127.7128	31.88	3.62	-43.18	51.80	44.12	74.00	29.88	Pass	V	PK
9	2659.3659	32.65	4.10	-43.10	54.86	48.51	74.00	25.49	Pass	V	PK
10	3983.0655	33.79	4.33	-43.00	53.40	48.52	74.00	25.48	Pass	V	PK
11	5005.1337	34.51	4.83	-42.81	51.07	47.60	74.00	26.40	Pass	V	PK
12	7713.3142	36.51	6.25	-42.13	49.07	49.70	74.00	24.30	Pass	V	PK

Mode:			π/4DQPSK Transmitting					Channel:		2441	
NO	Freq. [MHz]	Ant Factor [dB]	Cable loss [dB]	Pream gain [dB]	Reading [dBμV]	Level [dBμV/m]	Limit [dBμV/m]	Margin [dB]	Result	Polarity	Remark
1	1281.0281	28.18	2.72	-42.80	50.30	38.40	74.00	35.60	Pass	H	PK
2	1790.6791	30.32	3.30	-42.70	48.91	39.83	74.00	34.17	Pass	H	PK
3	2531.1531	32.45	4.07	-43.10	50.32	43.74	74.00	30.26	Pass	H	PK
4	3183.0122	33.27	4.62	-43.09	50.00	44.80	74.00	29.20	Pass	H	PK
5	5015.1343	34.52	4.84	-42.80	50.25	46.81	74.00	27.19	Pass	H	PK
6	6357.2238	35.87	5.44	-42.53	50.00	48.78	74.00	25.22	Pass	H	PK
7	1205.0205	28.11	2.66	-42.89	50.08	37.96	74.00	36.04	Pass	V	PK
8	1814.8815	30.48	3.34	-42.75	49.97	41.04	74.00	32.96	Pass	V	PK
9	2663.9664	32.66	4.10	-43.10	54.55	48.21	74.00	25.79	Pass	V	PK
10	3982.0655	33.79	4.33	-43.00	51.65	46.77	74.00	27.23	Pass	V	PK
11	4987.1325	34.50	4.82	-42.80	50.63	47.15	74.00	26.85	Pass	V	PK
12	7794.3196	36.48	6.12	-42.16	48.91	49.35	74.00	24.65	Pass	V	PK

Mode:			π/4DQPSK Transmitting					Channel:		2480	
NO	Freq. [MHz]	Ant Factor [dB]	Cable loss [dB]	Pream gain [dB]	Reading [dBμV]	Level [dBμV/m]	Limit [dBμV/m]	Margin [dB]	Result	Polarity	Remark
1	1257.6258	28.16	2.69	-42.83	49.93	37.95	74.00	36.05	Pass	H	PK
2	1980.2980	31.57	3.45	-43.15	49.01	40.88	74.00	33.12	Pass	H	PK
3	2566.7567	32.51	4.09	-43.10	50.71	44.21	74.00	29.79	Pass	H	PK
4	3819.0546	33.66	4.37	-43.04	49.71	44.70	74.00	29.30	Pass	H	PK
5	5036.1357	34.54	4.86	-42.79	50.01	46.62	74.00	27.38	Pass	H	PK
6	7773.3182	36.49	6.17	-42.15	49.31	49.82	74.00	24.18	Pass	H	PK
7	1319.8320	28.22	2.78	-42.77	50.76	38.99	74.00	35.01	Pass	V	PK
8	2125.3125	31.88	3.62	-43.18	54.64	46.96	74.00	27.04	Pass	V	PK
9	3986.0657	33.79	4.33	-43.00	50.61	45.73	74.00	28.27	Pass	V	PK
10	4960.1307	34.50	4.82	-42.80	53.77	50.29	74.00	23.71	Pass	V	PK
11	7466.2978	36.57	5.89	-42.11	50.91	51.26	74.00	22.74	Pass	V	PK
12	10796.5198	38.56	7.20	-42.00	48.67	52.43	74.00	21.57	Pass	V	PK

Remark:

1) The field strength is calculated by adding the Antenna Factor, Cable Factor & Preamplifier. The basic equation with a sample calculation is as follows:
   Final Test Level =Receiver Reading + Antenna Factor + Cable Factor – Preamplifier Factor
   Scan from 9kHz to 25GHz, the disturbance above 13GHz and below 30MHz was very low.

6..11.3 Transmitter Emission at Band edges

Mode:	GFSK Transmitting	Channel:	2402MHz
Remark:	PK		

Test Graph

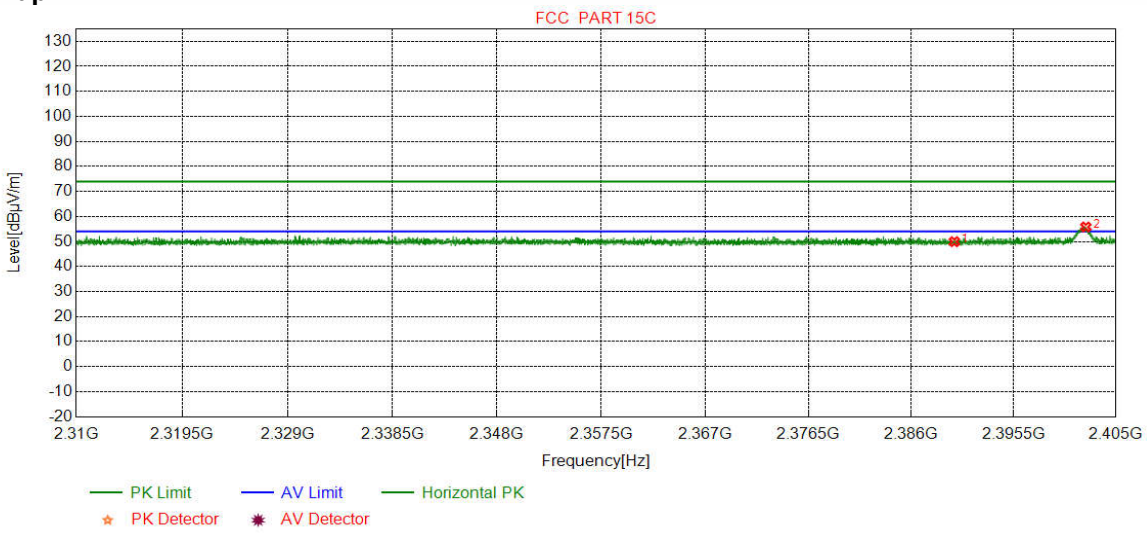

NO	Freq. [MHz]	Ant Factor [dB]	Cable loss [dB]	Pream gain [dB]	Reading [dBµV]	Level [dBµV/m]	Limit [dBµV/m]	Margin [dB]	Result	Polarity
1	2390.0000	32.25	13.37	-43.12	47.43	49.93	74.00	24.07	Pass	Horizontal
2	2402.2131	32.26	13.31	-43.12	53.36	55.81	74.00	18.19	Pass	Horizontal

Mode:	GFSK Transmitting	Channel:	2402MHz
Remark:	PK		

Test Graph

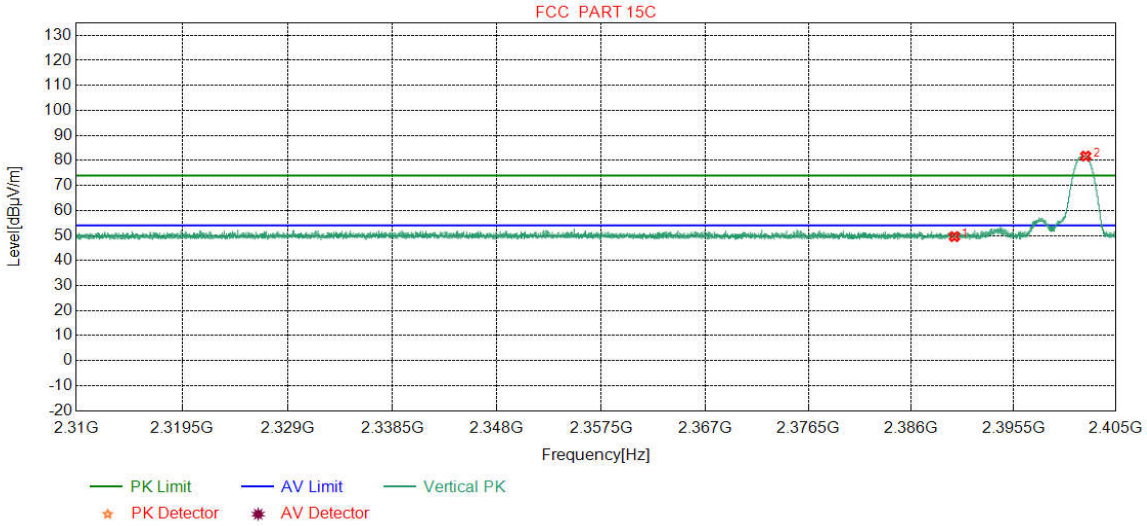

NO	Freq. [MHz]	Ant Factor [dB]	Cable loss [dB]	Pream gain [dB]	Reading [dBμV]	Level [dBμV/m]	Limit [dBμV/m]	Margin [dB]	Result	Polarity
1	2390.0000	32.25	13.37	-43.12	47.05	49.55	74.00	24.45	Pass	Vertical
2	2402.2005	32.26	13.31	-43.12	79.27	81.72	74.00	-7.72	Pass	Vertical

Mode:	GFSK Transmitting	Channel:	2402MHz
Remark:	AV		

Test Graph

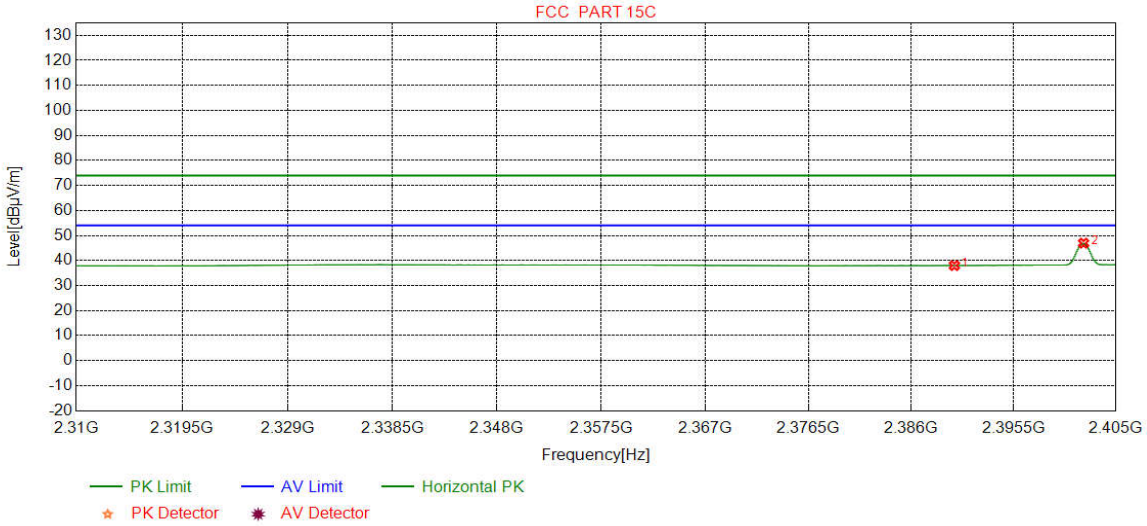

NO	Freq. [MHz]	Ant Factor [dB]	Cable loss [dB]	Pream gain [dB]	Reading [dBμV]	Level [dBμV/m]	Limit [dBμV/m]	Margin [dB]	Result	Polarity
1	2390.0000	32.25	13.37	-43.12	35.49	37.99	54.00	16.01	Pass	Horizontal
2	2402.0041	32.26	13.31	-43.12	44.49	46.94	54.00	7.06	Pass	Horizontal

Mode:	GFSK Transmitting	Channel:	2402MHz
Remark:	AV		

Test Graph

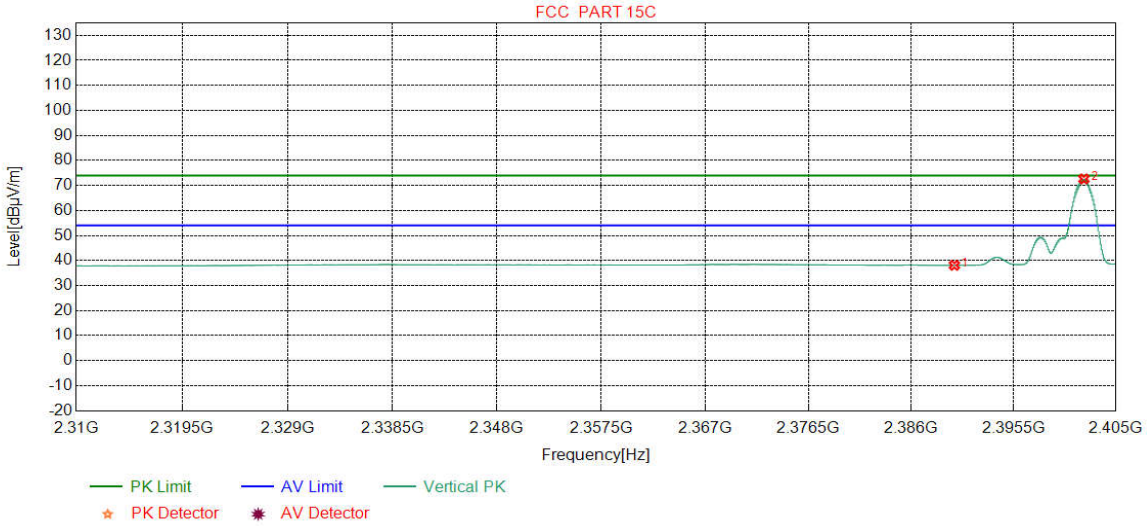

NO	Freq. [MHz]	Ant Factor [dB]	Cable loss [dB]	Pream gain [dB]	Reading [dBμV]	Level [dBμV/m]	Limit [dBμV/m]	Margin [dB]	Result	Polarity
1	2390.0000	32.25	13.37	-43.12	35.59	38.09	54.00	15.91	Pass	Vertical
2	2402.0358	32.26	13.31	-43.12	70.17	72.62	54.00	-18.62	Pass	Vertical

Mode:	GFSK Transmitting	Channel:	2480MHz
Remark:	PK		

Test Graph

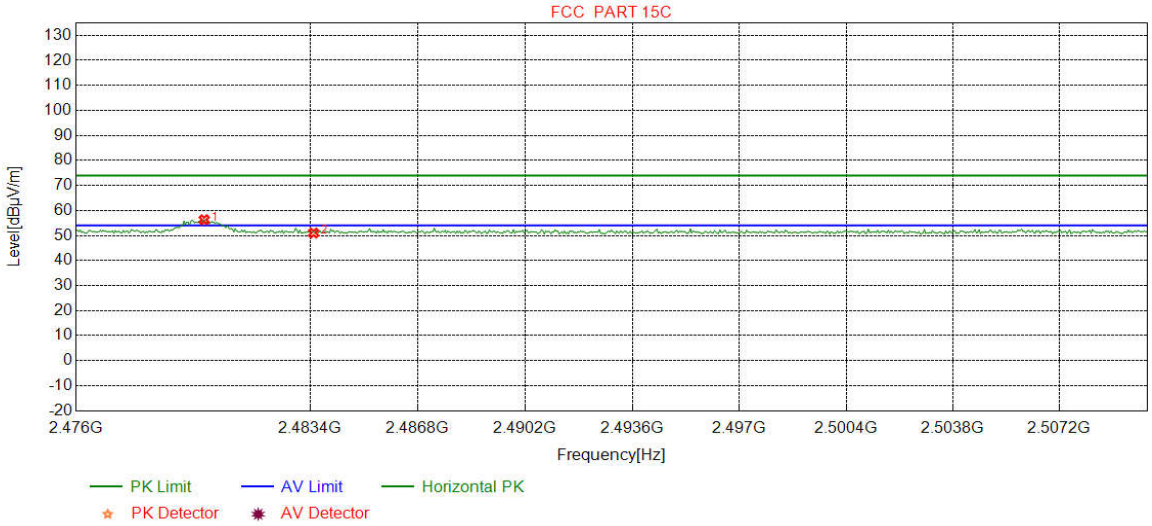

NO	Freq. [MHz]	Ant Factor [dB]	Cable loss [dB]	Pream gain [dB]	Reading [dBμV]	Level [dBμV/m]	Limit [dBμV/m]	Margin [dB]	Result	Polarity
1	2480.0426	32.37	13.39	-43.10	53.64	56.30	74.00	17.70	Pass	Horizontal
2	2483.5000	32.38	13.38	-43.11	48.34	50.99	74.00	23.01	Pass	Horizontal

Mode:	GFSK Transmitting	Channel:	2480MHz
Remark:	PK		

Test Graph

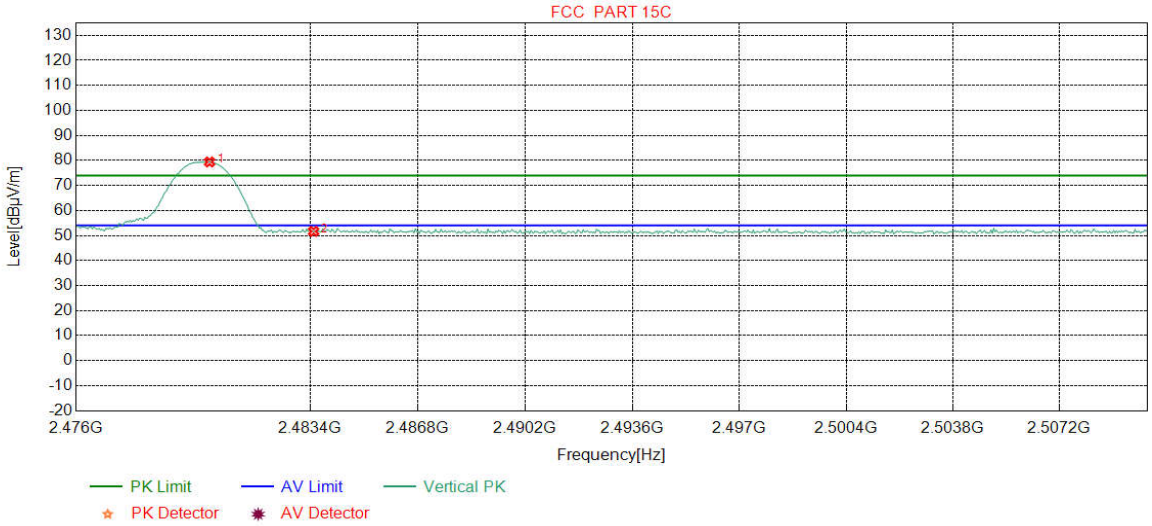

NO	Freq. [MHz]	Ant Factor [dB]	Cable loss [dB]	Pream gain [dB]	Reading [dBμV]	Level [dBμV/m]	Limit [dBμV/m]	Margin [dB]	Result	Polarity
1	2480.2128	32.37	13.39	-43.10	76.73	79.39	74.00	-5.39	Pass	Vertical
2	2483.5000	32.38	13.38	-43.11	49.00	51.65	74.00	22.35	Pass	Vertical

Mode:	GFSK Transmitting	Channel:	2480MHz
Remark:	AV		

Test Graph

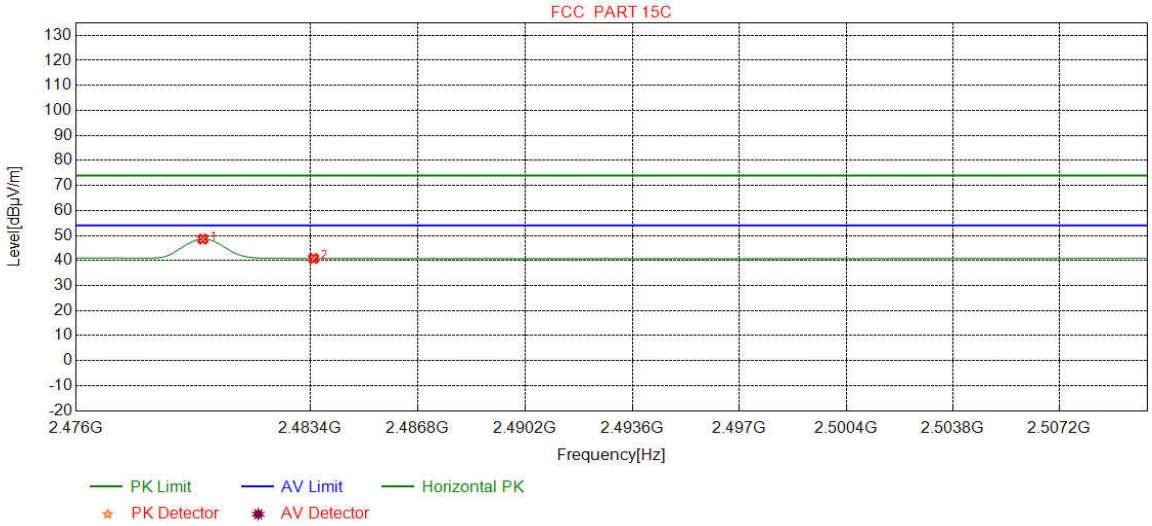

NO	Freq. [MHz]	Ant Factor [dB]	Cable loss [dB]	Pream gain [dB]	Reading [dBμV]	Level [dBμV/m]	Limit [dBμV/m]	Margin [dB]	Result	Polarity
1	2480.0000	32.37	13.39	-43.10	45.92	48.58	54.00	5.42	Pass	Horizontal
2	2483.5000	32.38	13.38	-43.11	38.18	40.83	54.00	13.17	Pass	Horizontal

Mode:	GFSK Transmitting	Channel:	2480MHz
Remark:	AV		

Test Graph

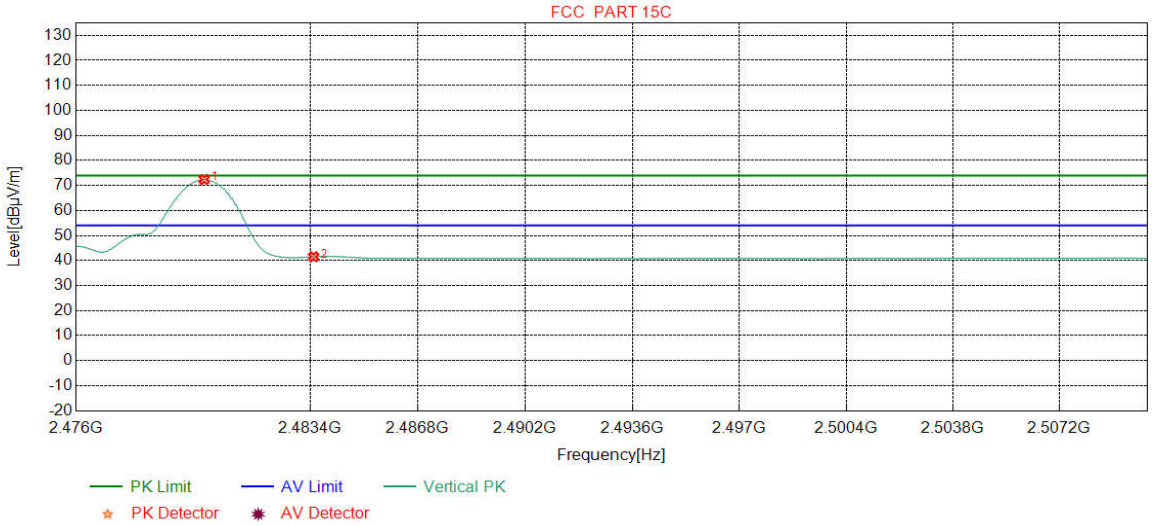

NO	Freq. [MHz]	Ant Factor [dB]	Cable loss [dB]	Pream gain [dB]	Reading [dBμV]	Level [dBμV/m]	Limit [dBμV/m]	Margin [dB]	Result	Polarity
1	2480.0426	32.37	13.39	-43.10	69.72	72.38	54.00	-18.38	Pass	Vertical
2	2483.5000	32.38	13.38	-43.11	38.87	41.52	54.00	12.48	Pass	Vertical

Mode:	π/4DQPSK Transmitting	Channel:	2402MHz
Remark:	PK		

Test Graph

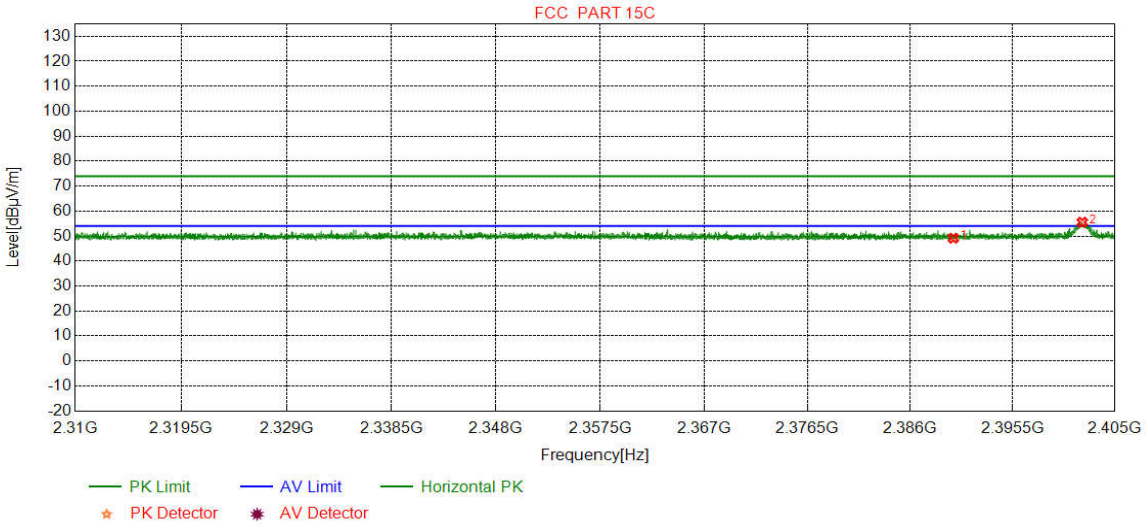

NO	Freq. [MHz]	Ant Factor [dB]	Cable loss [dB]	Pream gain [dB]	Reading [dBμV]	Level [dBμV/m]	Limit [dBμV/m]	Margin [dB]	Result	Polarity
1	2390.0000	32.25	13.37	-43.12	46.64	49.14	74.00	24.86	Pass	Horizontal
2	2401.9725	32.26	13.31	-43.12	53.09	55.54	74.00	18.46	Pass	Horizontal

Mode:	π/4DQPSK Transmitting	Channel:	2402MHz
Remark:	PK		

Test Graph

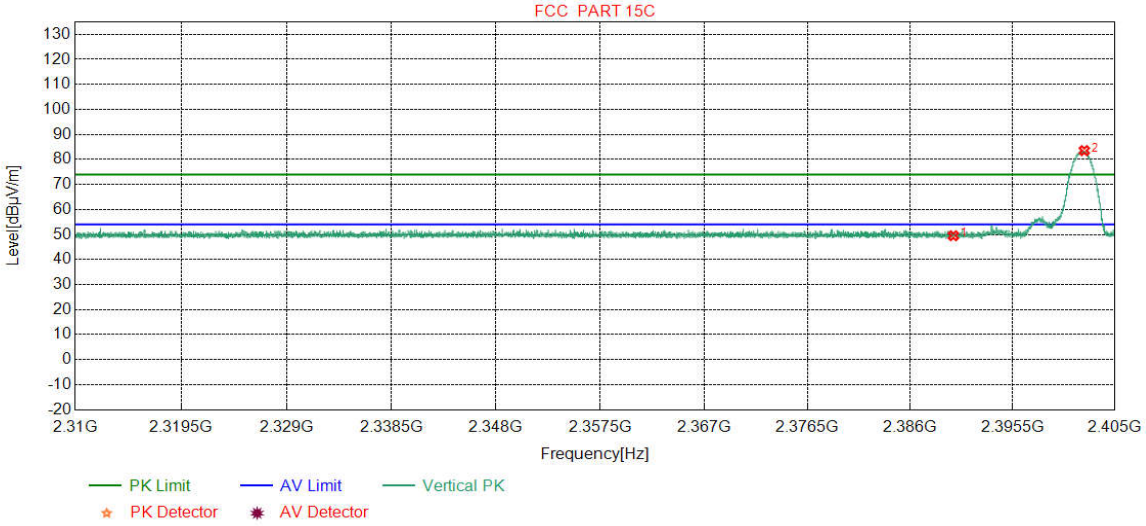

NO	Freq. [MHz]	Ant Factor [dB]	Cable loss [dB]	Pream gain [dB]	Reading [dBμV]	Level [dBμV/m]	Limit [dBμV/m]	Margin [dB]	Result	Polarity
1	2390.0000	32.25	13.37	-43.12	47.00	49.50	74.00	24.50	Pass	Vertical
2	2402.1625	32.26	13.31	-43.12	81.08	83.53	74.00	-9.53	Pass	Vertical

Mode:	π/4DQPSK Transmitting	Channel:	2402MHz
Remark:	AV		

Test Graph

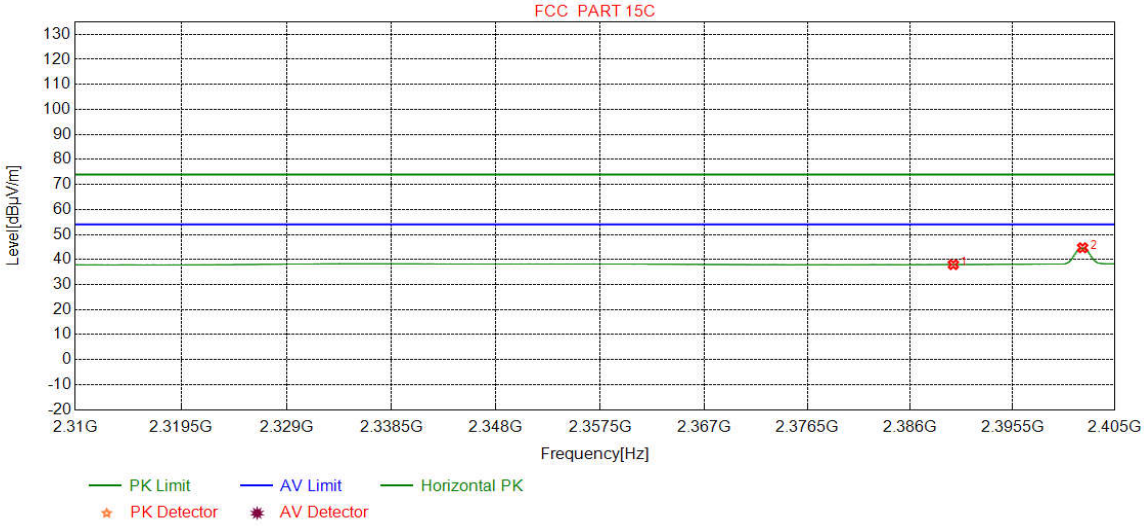

NO	Freq. [MHz]	Ant Factor [dB]	Cable loss [dB]	Pream gain [dB]	Reading [dBμV]	Level [dBμV/m]	Limit [dBμV/m]	Margin [dB]	Result	Polarity
1	2390.0000	32.25	13.37	-43.12	35.46	37.96	54.00	16.04	Pass	Horizontal
2	2402.0041	32.26	13.31	-43.12	42.25	44.70	54.00	9.30	Pass	Horizontal

Mode:	π/4DQPSK Transmitting	Channel:	2402MHz
Remark:	AV		

Test Graph

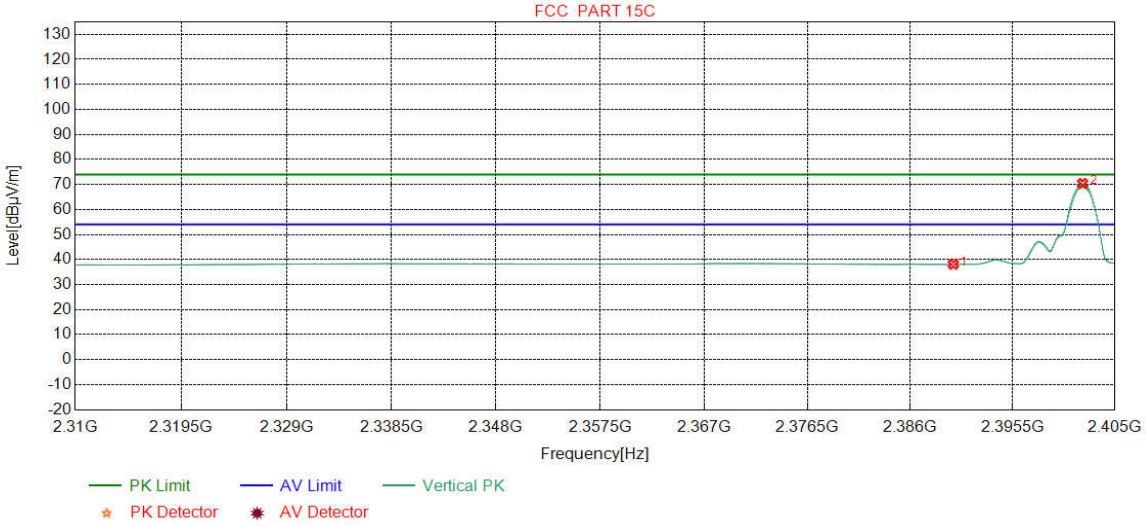

NO	Freq. [MHz]	Ant Factor [dB]	Cable loss [dB]	Pream gain [dB]	Reading [dBμV]	Level [dBμV/m]	Limit [dBμV/m]	Margin [dB]	Result	Polarity
1	2390.0000	32.25	13.37	-43.12	35.59	38.09	54.00	15.91	Pass	Vertical
2	2402.0041	32.26	13.31	-43.12	67.96	70.41	54.00	-16.41	Pass	Vertical

Mode:	π/4DQPSK Transmitting	Channel:	2480MHz
Remark:	PK		

Test Graph

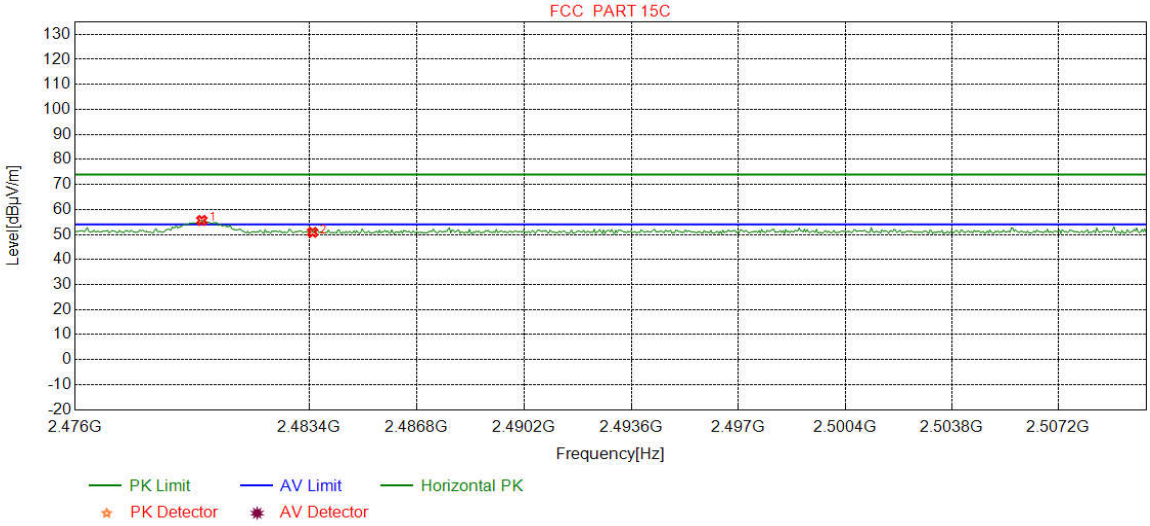

NO	Freq. [MHz]	Ant Factor [dB]	Cable loss [dB]	Pream gain [dB]	Reading [dBμV]	Level [dBμV/m]	Limit [dBμV/m]	Margin [dB]	Result	Polarity
1	2480.0000	32.37	13.39	-43.10	52.97	55.63	74.00	18.37	Pass	Horizontal
2	2483.5000	32.38	13.38	-43.11	48.24	50.89	74.00	23.11	Pass	Horizontal

Mode:	π/4DQPSK Transmitting	Channel:	2480MHz
Remark:	PK		

Test Graph

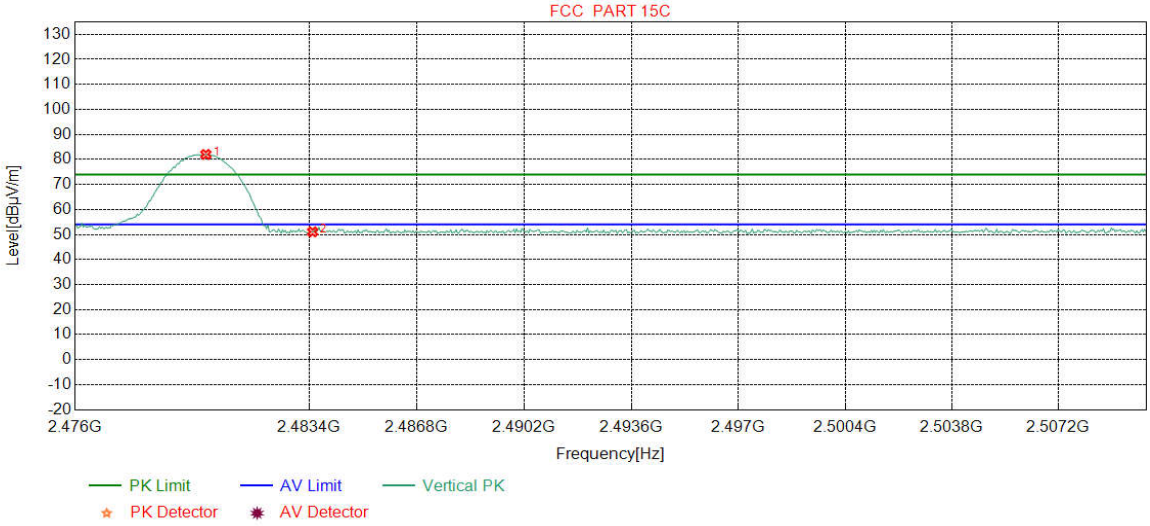

NO	Freq. [MHz]	Ant Factor [dB]	Cable loss [dB]	Pream gain [dB]	Reading [dBμV]	Level [dBμV/m]	Limit [dBμV/m]	Margin [dB]	Result	Polarity
1	2480.1277	32.37	13.39	-43.10	79.34	82.00	74.00	-8.00	Pass	Vertical
2	2483.5000	32.38	13.38	-43.11	48.40	51.05	74.00	22.95	Pass	Vertical

Mode:	π/4DQPSK Transmitting	Channel:	2480MHz
Remark:	AV		

Test Graph

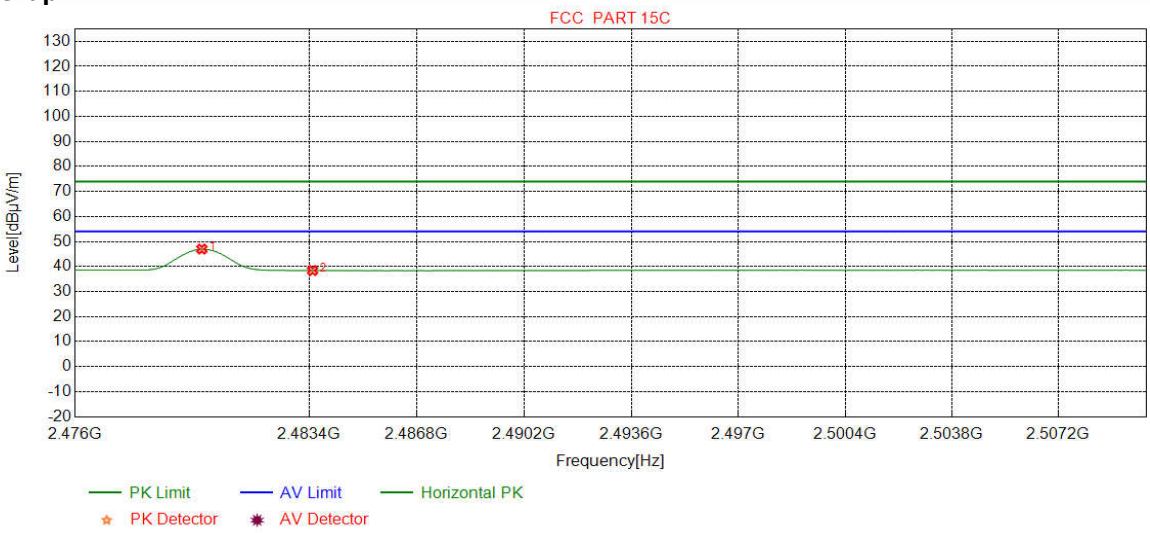

NO	Freq. [MHz]	Ant Factor [dB]	Cable loss [dB]	Pream gain [dB]	Reading [dBμV]	Level [dBμV/m]	Limit [dBμV/m]	Margin [dB]	Result	Polarity
1	2480.0000	32.37	13.39	-43.10	44.33	46.99	54.00	7.01	Pass	Horizontal
2	2483.5000	32.38	13.38	-43.11	35.74	38.39	54.00	15.61	Pass	Horizontal

Mode:	π/4DQPSK Transmitting	Channel:	2480MHz
Remark:	AV		

Test Graph

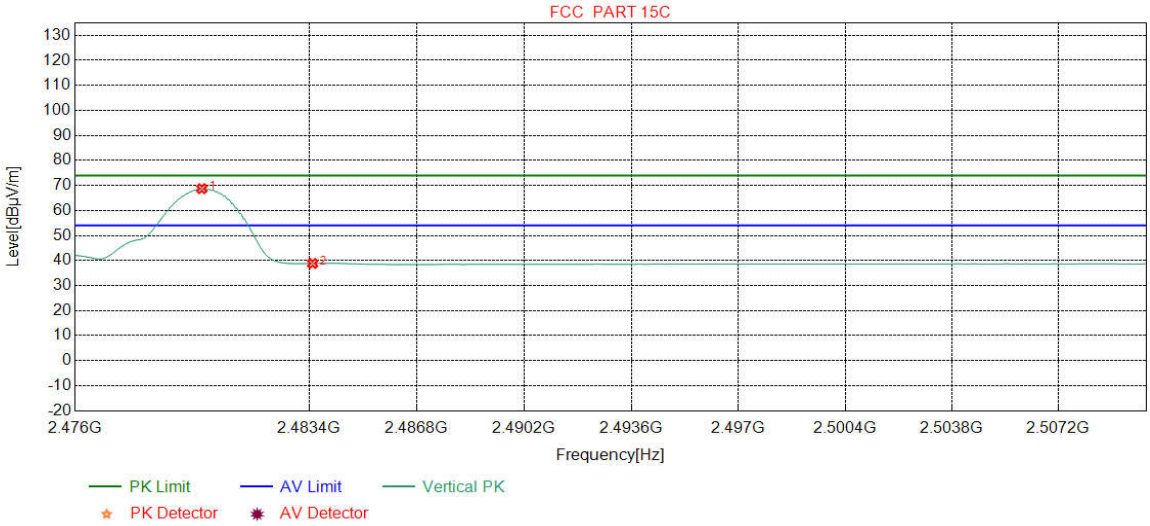

NO	Freq. [MHz]	Ant Factor [dB]	Cable loss [dB]	Pream gain [dB]	Reading [dBμV]	Level [dBμV/m]	Limit [dBμV/m]	Margin [dB]	Result	Polarity
1	2480.0000	32.37	13.39	-43.10	66.06	68.72	54.00	-14.72	Pass	Vertical
2	2483.5000	32.38	13.38	-43.11	36.19	38.84	54.00	15.16	Pass	Vertical

Note:
The field strength is calculated by adding the Antenna Factor, Cable Factor & Preamplifier. The basic equation with a sample calculation is as follows:
Final Test Level =Receiver Reading - Correct Factor
Correct Factor = Preamplifier Factor– Antenna Factor–Cable Factor

7 Appendix A

Refer to Appendix: Bluetooth BR/EDR of EED32M80097101.