FIIL®

THE ART OF AUDIO

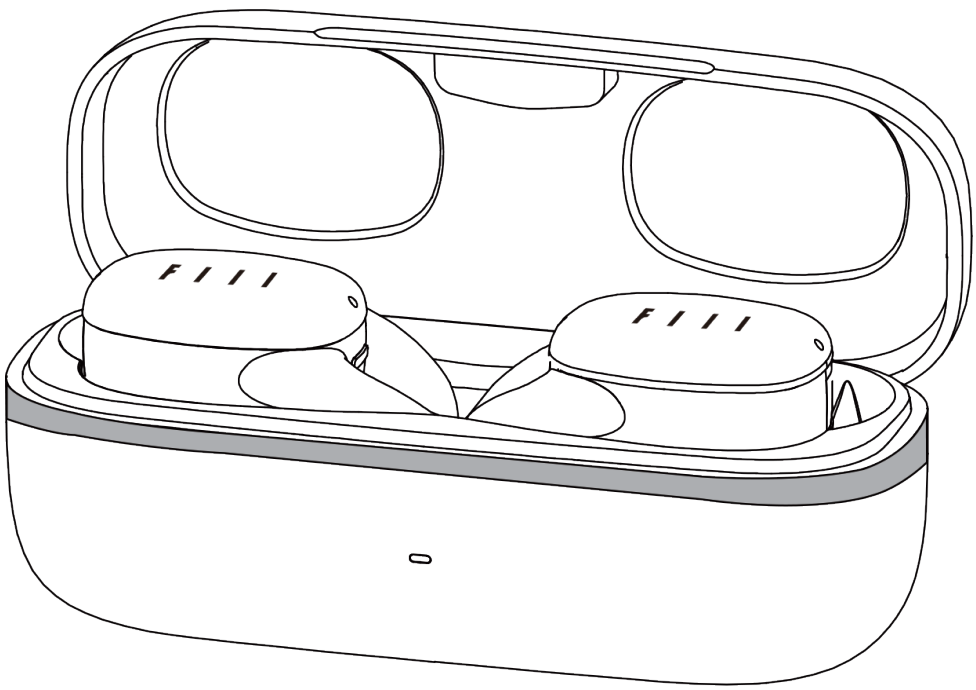

FIIL T2 Pro

TRUE WIRELESS EARBUDS

USER MANUAL

⚠ Important Safety Instructions

Please read the following safety instructions carefully before using this product. Please make sure to include these safety instructions with the product when delivered to a third party.

Health and safety

- Do not use the product in case it is apparently damaged;
- Do not use the product at a high volume level for an extended period of time;
- Do not use the product while driving or being engaged in activities that require full concentration;
- Keep the product, its packaging and accessories out of the reach of children and pets to avoid choking hazard;
- Keep the product away from medical devices that may be affected by magnetic field, such as an implanted cardiac pacemaker.

Product care

- Keep this product dry and at room temperature, avoid long time exposure to high temperature or humidity environments;
- Use accessories only provided by fiil;
- Excessive signal level may cause damaging overload;
- Clean the product only with dry and soft cloth.

Battery safety warning!

The product uses lithium polymer battery. Improper usage may lead to the risk of fire or burn. Please use the charger only supplied by qualified manufacturer (recommended output: voltage 5V, current ~500mA) or charge the product via PC USB port.

Specification and disclaimer

- The product is designed for portable devices and high-fidelity systems;
- Any usage other than those specified in the user manual is deemed as misuse;
- Please note that FIIL will accept no responsibility for any loss incurred by misuse.
- FIIL T2 Pro is designed &made by Jiangxi Feier Technology Co., Ltd.
- 'FIIL' is a registered trademark® of Jiangxi Feier Technology Co., Ltd.

fiil+ APP download and usage

FIIL T2 Pro supports fiil+ APP to config earbud settings, register products.

Visit homepage to download fiil+ APP

Visit iOS APP Store to download fiil+ APP

Scan above QR code to visit and download fiil+ APP

Packaging Content

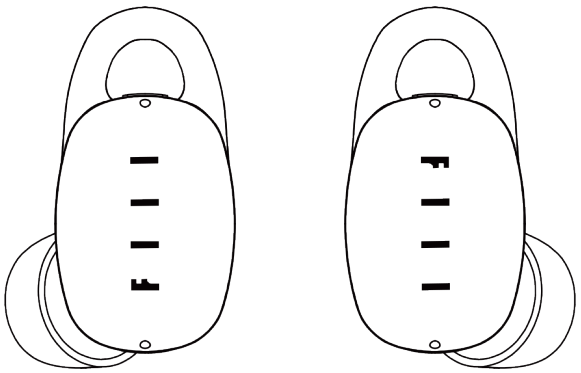

Earbuds X2
(L/R)

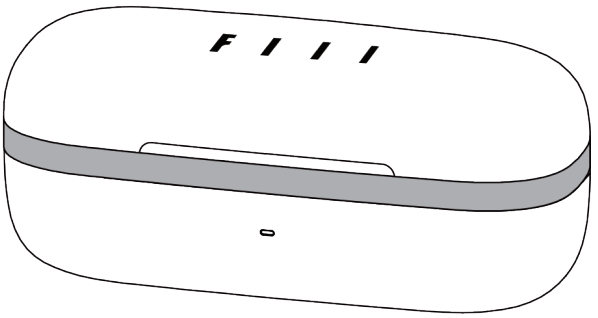

Charging Case X1

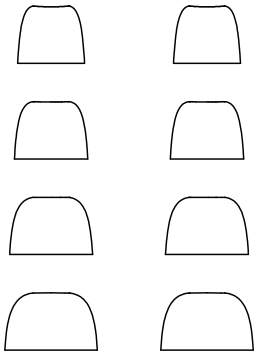

Eartips

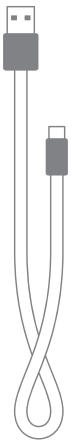

USB- C Cable X1

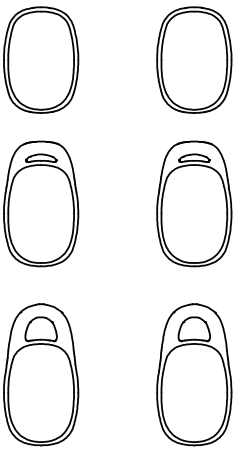

Earwings

Main User Interfaces

●Earbud

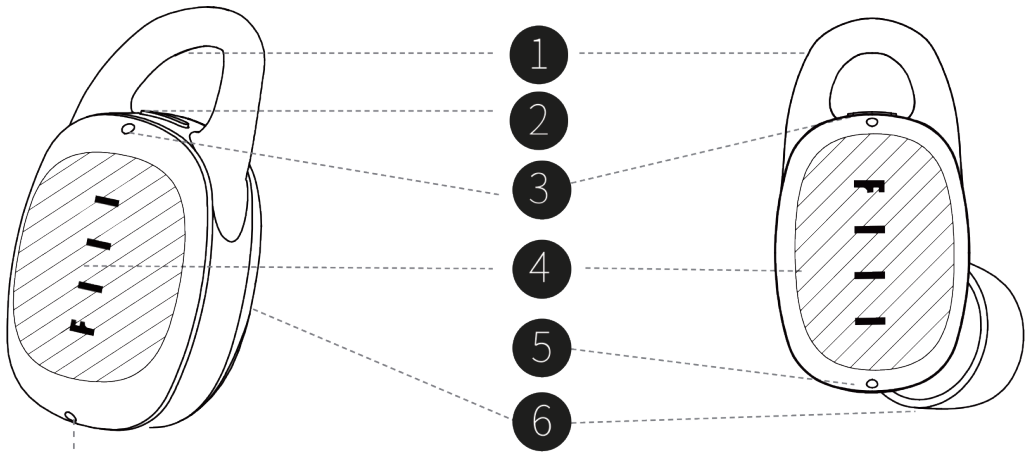

❶ Earwings
❷ LED indicator
❸ Env. microphone
❹ Touch pad
❺ Call microphone
❻ Eartips

● Charging Case

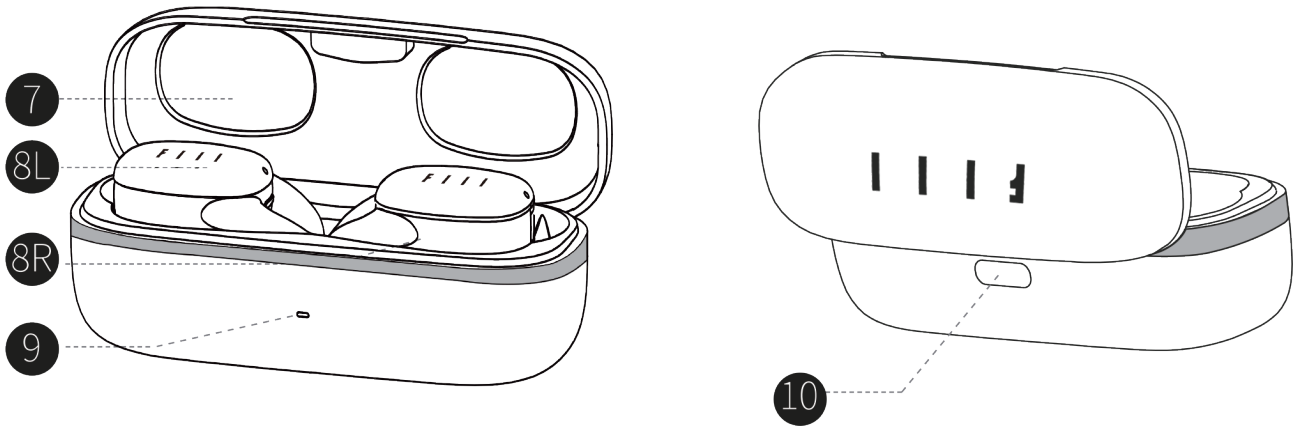

❼ Charging Case
❽L Left earbud
❽R Right earbud
❾ Charge indicator
❿ Type-C connector

Get Started

Please follow below steps to activate and start to use.

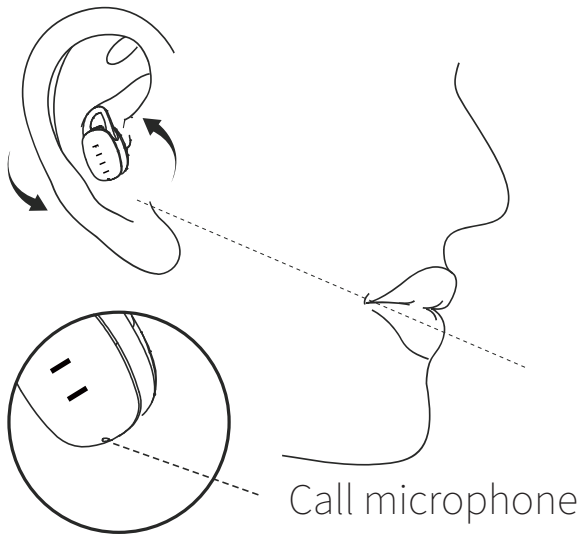

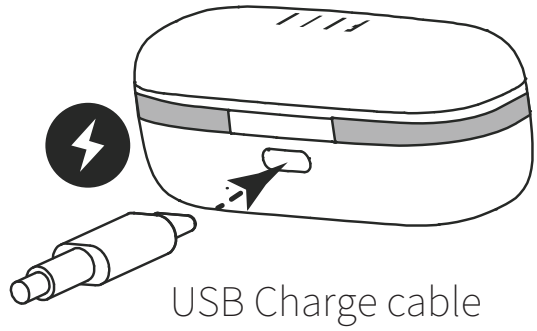

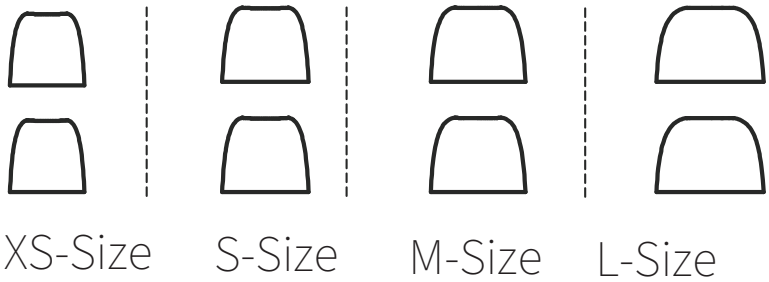

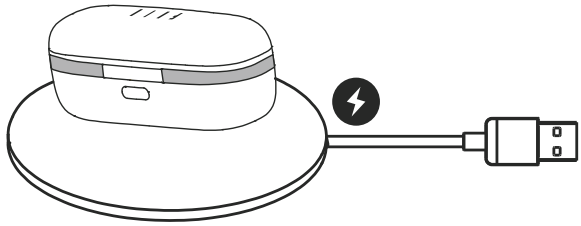

- STEP1
  If charging case's LED does not light on after opening the charging case at first , please connect USB cable to charge for more than 10min.

- STEP2
  Take earbuds out of charging case, the blue light flashes. Both earbuds will get sync and enter pairing mode automatically without any manual operation.

Bluetooth Pairing

● Bluetooth Pairing

For the first usage of brand new FIIL T2 Pro, please refer to Started” on the page 5, the earbud status indicator will continue to blink white once entered pairing mode.

For a paired FIIL T2 Pro, please delete its pairing history in the device list or when the earbuds are turned off , press and hold any one of earbuds until the LED indicator blinks blue.

● Search Connection

Enter setup menu of audio source devices, select “search device” in"Bluetooth" then select "FIIL T2 Pro"in the device list to connect.

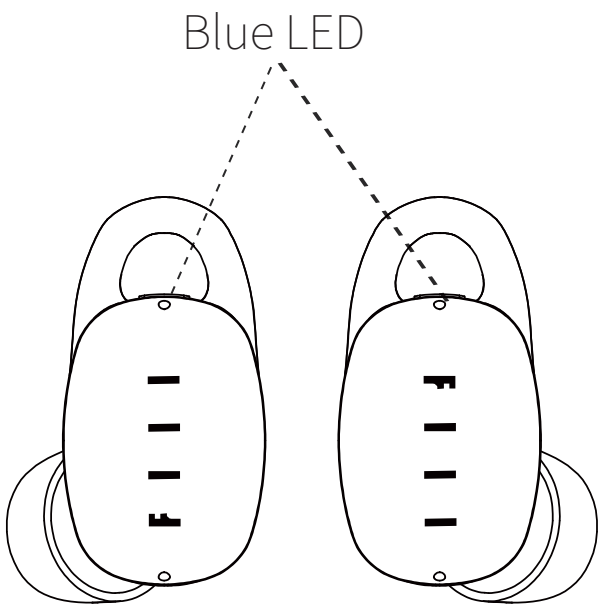

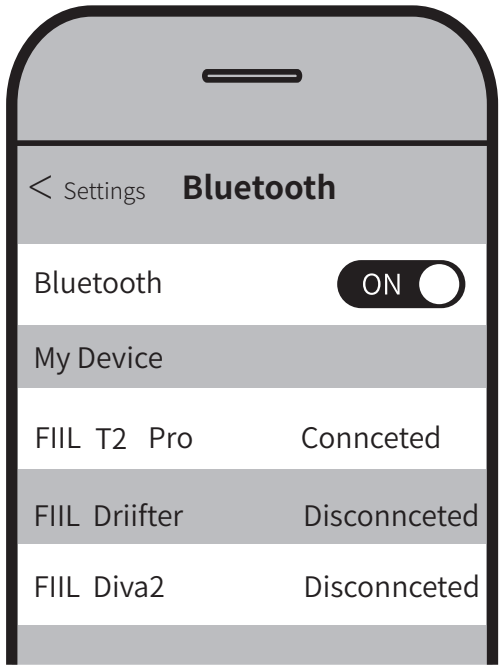

How to Control

●Default Mode

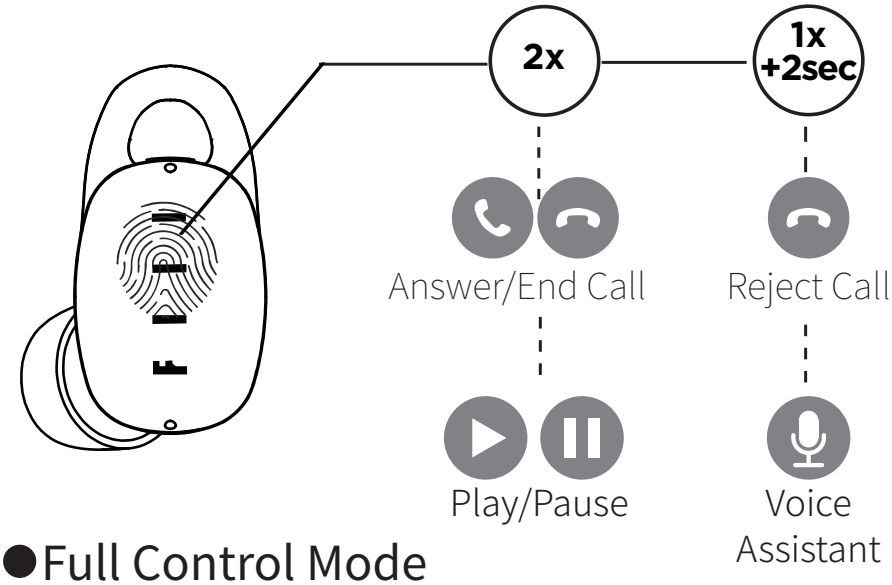

●Full Control Mode

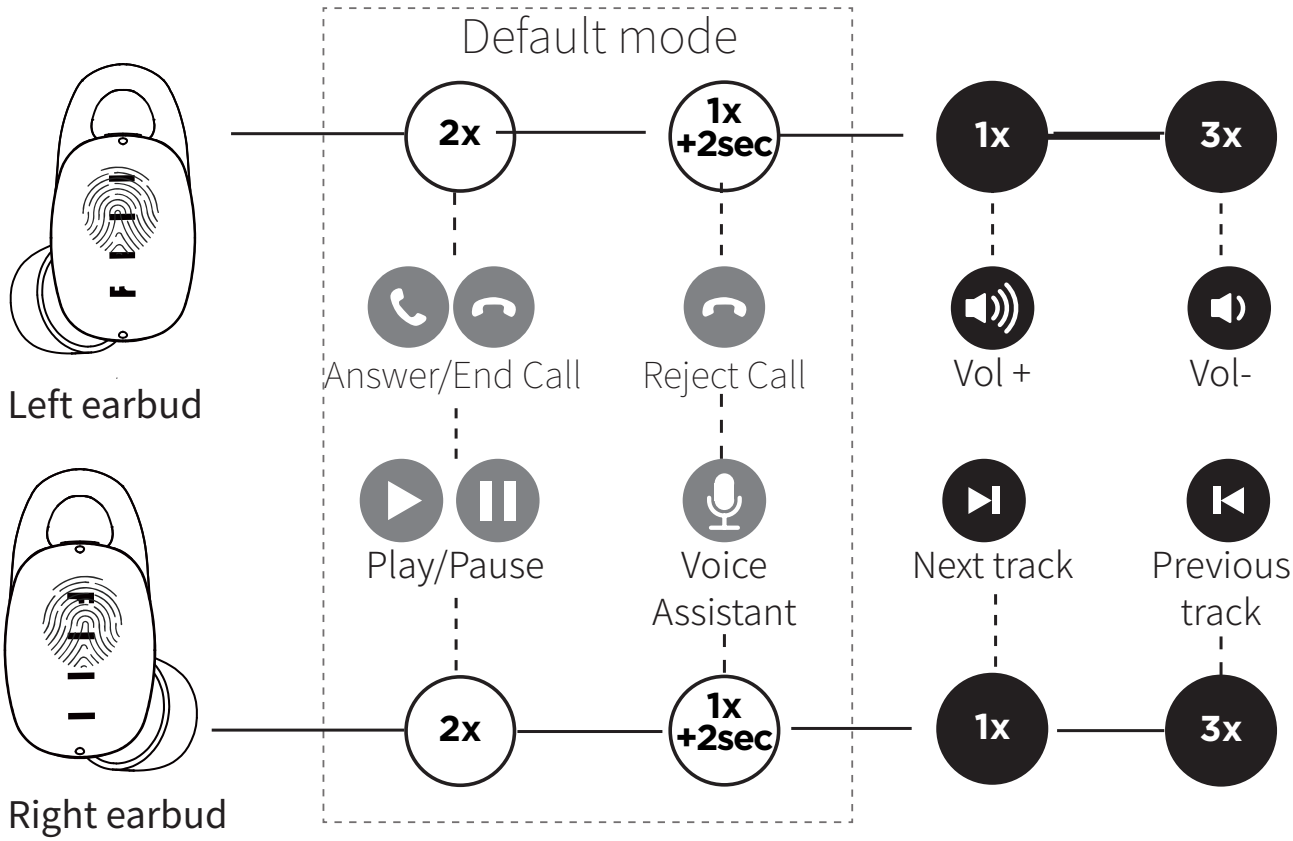

*Notes: Full Control Mode can be activated in the fiil + APP

How to charge

- Charge Earbud

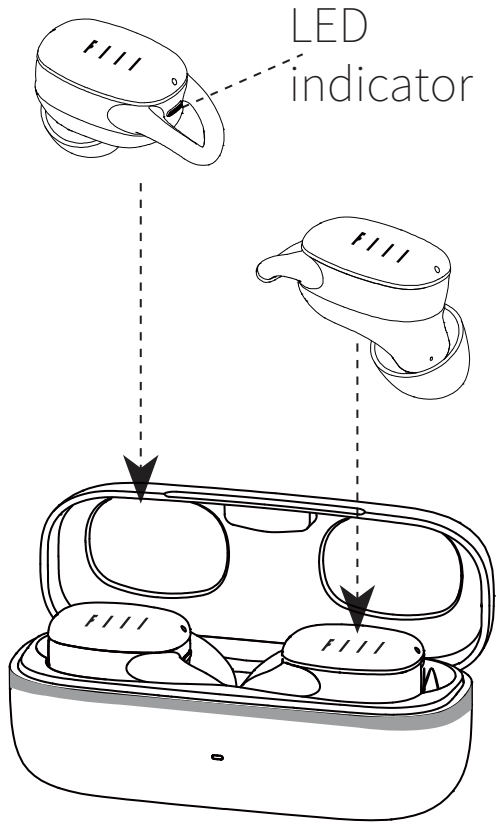

- When earbud reminds “recharge headset” or the LED indicator blinks white , that means battery is low and earbud should be charged.

- Place the earbuds into charging case and close, then earbud will be charged.

*Notes:

1. The earbuds will power off and the Bluetooth will be disconnected during charging.
2. If the charging case LED blinks after earbuds are inserted, please connect the USB cable to charge.

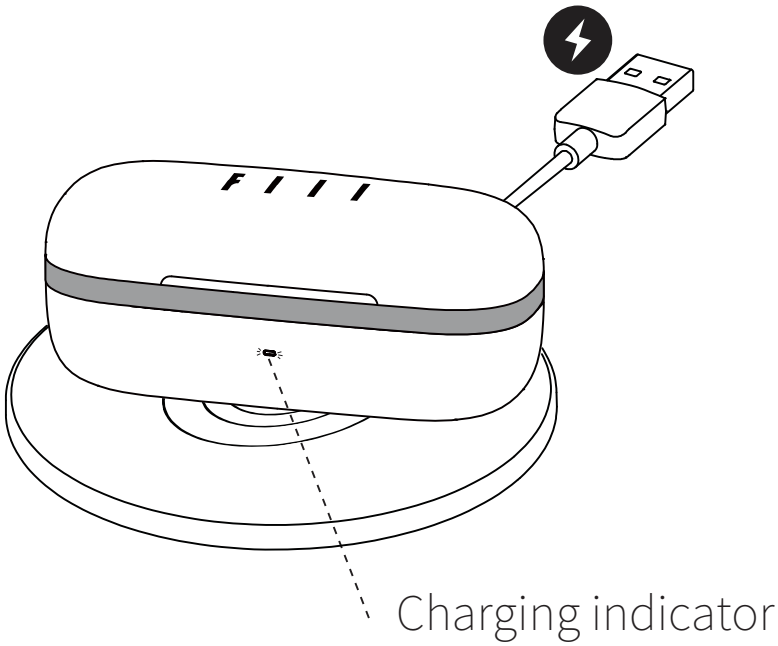

How to charge

Recharge Charging Case

- When the charging case is unable to charge earbuds or its LED indicator blinks, it means battery is low and the charging case should be recharged.
- Please connect USB-C cable with USB adapter to recharge charging case.

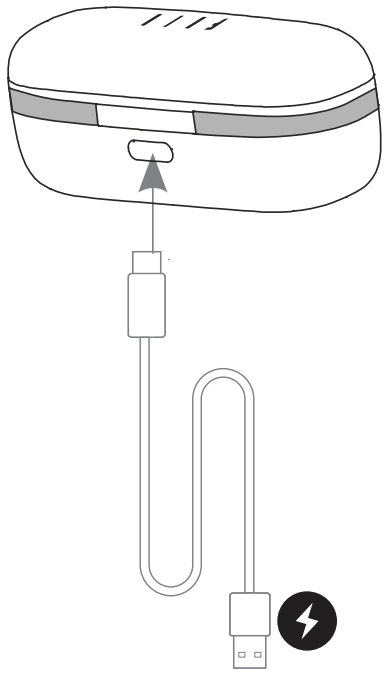

USB Charge cable

Charging Case Indicator

- When LED indicators are light on, it means that the charging case is being charged.
- When LED indicator is light off, it means that the charging case and earbuds are fully charged.

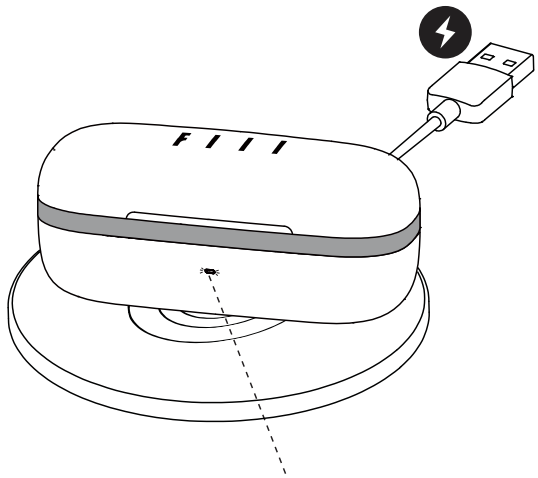

Charge LED

Product Parameters

Item	Specifications
Earbud weight Charging case weight	~4.4g/each ~30g
User Mode	Bluetooth True Wireless
Bluetooth	V5.2, supported protocols: HSP , HFP , A2DP , AVRCP BT range: up to 30m. Pairing code: 0000. iOS and Android devices are supported.
Audio specification	Supported Code: AAC (for iOS) /SBC; Speaker specifications: ϕ6.1mm, Frequency range: 15Hz-22kHz
Power and battery	Rechargeable lithium-polymer battery; music time: up to 6Hrs (medium level) on a single charge; Bluetooth standby time: up to 5 days ; charging time: ~ 50 minutes. Support extra 3 charging times with charging case.
Operating environment	Operating temperature: 0°C~50°C; storage temperature: -30°C to 70°C; IEC60529-IPX5 Certified(earbuds)
Voice reminder	English
Certification	BQB Bluetooth 5.2,SRRC,RoHS,REACH,FCC,IPX5,GB4943

Warranty and Services

Due to country and regional restriction, there are different return policy from different store. Please help us to contact the online or offline channel/store where you purchased from for after-sales service support.

You can also get support through FIIL' s social media (FIIL Audio) including Facebook, Twitter, Instagram.

Email: customer@fiil.com

Trouble Shooting

Problem	How to fix
Earbuds won’t turn on	• Power on the earbuds . • Charge the battery.
Earbuds won’t pair with Bluetooth device	• On your Bluetooth device: –– Turn the Bluetooth feature on and then off. –– Delete your FIIL CC2 Earbuds from the Bluetooth list on your device, pair again. • Move your Bluetooth device closer to the earbuds and away from any interference or obstructions. • Pair a different Bluetooth device.
No sound	• Power on the earbuds and charge the battery. • Increase the volume on your earbuds and Bluetooth device. • Press the Power/Bluetooth button to hear the connected device. Make sure you are using the correct device. • Move your Bluetooth device closer to the earbuds and away from any interference or obstructions. • Use a different music source. • Pair a different Bluetooth device. • If two Bluetooth devices are connected, pause the first device and play the other device.

Problem	How to fix
Poor sound quality	• Use a different music source. • Pair a different Bluetooth device. • Disconnect the second device. • Move the Bluetooth device closer to the earbuds, and away from any interference or obstructions. • Clear any debris or wax build-up from the earbuds and earbuds nozzles.
Earbuds won’t charge	• Please use the USB cable in the accessories to connect the earbuds to the charger,make sure the cable is firmly connected to the eardbuds and the charger. • Try changing the charging cable or charger. • Make sure the earbuds charging pole contacts are clean and dry. • Secure both ends of the USB cable. • If your earbuds have been exposed to high or low temperatures, let the earbuds return to room temperature and then try charging again.

FCC and IC COMPLIANCE STATEMENT

This device complies with Part 15 of the FCC Rules and Industry Canada License-exempt RSS standard(s).

Operation is subject to the following two conditions:

1. This device may not cause harmful interference, and
2. This device must accept any interference received, including interference that may cause undesired operation.

This equipment has been tested and found to comply with the limits for a Class B digital device, pursuant to Part 15 of the FCC Rules / with Canadian ICES-003. These limits are designed to provide reasonable protection against harmful interference in a residential installation. This equipment generates, uses, and can radiate radio frequency energy and, if not installed and used in accordance with the instructions, may cause harmful interference to radio communications.

However, there is no guarantee that interference will not occur in a particular installation. If this equipment does cause harmful interference to radio or television reception which can be determined by turning the radio or television off and on, the user is encouraged to try to correct interference by one or more of the following measures:

1. Reorient or relocate the receiving antenna.
2. Increase the separation between the equipment and receiver.
3. Connect the equipment into an outlet on another circuit.
4. Consult the dealer or an experienced radio/TV technician for help.

CAUTION STATEMENT

Any changes or modifications not expressly approved by the party responsible for compliance could void the user's authority to operate the equipment.

This equipment complies with FCC radiation exposure limits set forth for an uncontrolled environment .The device has been evaluated to meet general RF exposure requirement.
The device can be used in portable exposure condition without restriction.

Correct disposal of This Product (Waste Electrical & Electronic Equipment)
(Applicable in the European Union and other European countries with separate collection systems)
This marking shown on the product or its literature indicates that it should not be disposed with other household wastes at the end of its working life.

To prevent possible harm to the environment or human health from uncontrolled waste disposal, please separate this from other types of wastes and recycle it responsibly to promote the sustainable reuse of material resources. Household users should contact either the retailer where they purchased this product, or their local government office for details of where and how they can take this item for environmentally safe recycling.
Business users should contact their supplier and check the terms and conditions of the purchase contract.
This product should not be mixed with other commercial wastes for disposal.

CAUTION
Risk of explosion if battery is replaced by an incorrect type.
Dispose of used batteries according to the instructions.

To prevent possible hearing damage, do not listen at high volume levels for long periods.

Model:F035
FCC ID:2AYVH-F035