PlumeSafe® X5

Smoke Management System

Operator's Manual

Foreword

This Operator's Manual provides the user with setup and operating instructions for the CONMED PlumeSafe® X5 Smoke Management System (Smoke Evacuation Unit and Filters).

The CONMED PlumeSafe® X5 Smoke Management System is a part of the CONMED Multifunction Energy Platform and is designed for use by medical professionals familiar with the required techniques and instructions for use of the equipment. It is recommended that personnel study this manual before attempting to operate this equipment.

WARNING: Federal law (USA) restricts this device to be sold by or on the order of a physician.

Technical specifications, performance characteristics, and user maintenance instructions are also included in this Operator's Manual. The safe and effective use of this equipment requires the understanding of and compliance with all warnings, precautionary notices, and instructions marked on the product or included in this Operator's Manual.

The revision level of this manual is specified by the highest revision letter found on the back cover.

Unit Model: _____ Unit Serial Number: _____ Manufacturing Date: _____

Limited Warranty

For a period of one year following the date of shipment, CONMED Corporation warranties the CONMED PlumeSafe® X5 Smoke Management System against any defects in material or workmanship and will repair or replace (at CONMED's discretion) the same without charge, provided that periodic inspection specified in this manual has been performed using replacement parts approved by CONMED. This warranty is void if the product is used in a manner or for purposes other than intended.

Electronic Instructions For Use

For the latest version of the CONMED PlumeSafe® X5 Smoke Management System Operator's Manual and for other languages, please go to https://eifu.conmed.com.

This operator's manual is available in the following languages:

Language	eIFU Part Code
Arabic	PX5-SMS-AR
Croatian	PX5-SMS-HR
Czech	PX5-SMS-CS
Danish	PX5-SMS-DA
Dutch	PX5-SMS-NL
English	PX5-SMS-EN
Portuguese, European	PX5-SMS-PT
Portuguese, Brazilian	PX5-SMS-BP
Finnish	PX5-SMS-FI
French	PX5-SMS-FR
German	PX5-SMS-DE
Greek	PX5-SMS-EL
Hungarian	PX5-SMS-HU
Italian	PX5-SMS-IT
Japanese	PX5-SMS-JA
Lithuanian	PX5-SMS-LT
Norwegian	PX5-SMS-NO
Polish	PX5-SMS-PL
Romanian	PX5-SMS-RO
Russian	PX5-SMS-RU
Simplified Chinese	PX5-SMS-ZH
Slovak	PX5-SMS-SK
Slovene	PX5-SMS-SL
Spanish	PX5-SMS-ES
Swedish	PX5-SMS-SV
Turkish	PX5-SMS-TR

Table of Contents

Page

1.0 GENERAL 1
- **1.1** Introduction 1
- **1.2** Intended Use/Indications For Use 1
- **1.3** System Scope and Features 1
  - **1.3.1** Scope 1
- **1.4** System Overview 2
  - **1.4.1** Major Components 2
  - **1.4.2** Front Panel 3
  - **1.4.3** Rear Panel 3
  - **1.4.4** Top Panel 4
  - **1.4.5** Bottom Panel 4
  - **1.4.6** Explanation of Symbols 5
- **1.5** Accessory Compatibility 6
  - **1.5.1** CONMED PLUMESAFE® X5 Filters 6
  - **1.5.2** Footswitch 6
  - **1.5.3** Cables 6
  - **1.5.4** Remote Activation 6
  - **1.5.5** Fluid Trap 6
  - **1.5.6** Other 6

2.0 CAUTIONS AND WARNINGS 7
- **2.1** Warnings 7
- **2.2** Cautions 8
- **2.3** Serious Incidents 8

3.0 INSTALLATION 9
- **3.1** Initial Unpacking and Inspection 9
- **3.2** Unit Installation 9
  - **3.2.1** CONMED PLUMESAFE® X5 SEU Installation 9
  - **3.2.2** Pneumatic Footswitch Installation 9
  - **3.2.3** EZLink® or Direct Connect Cable 9
  - **3.2.4** Sealed Unit Connection to Central Evacuation Systems 10
- **3.3** Filter Installation 10
  - **3.3.1** Filter Installation Instructions 10
  - **3.3.2** Filter Removal Instructions 10
  - **3.3.3** Fluid Trap Installation 11
- **3.4** Preliminary Checks 11
  - **3.4.1** Checks 11
  - **3.4.2** Fuse Replacement 12

4.0 TOUCHSCREEN USER INTERFACE AND SYSTEM CONTROLS 14
- **4.1** Touch Screen 14
  - **4.1.1** Touch Screen Layout 14
  - **4.1.2** Filter Life Icons 15
- **4.2** Additional System Notifications 15

5.0 SETUP FOR CLINICAL USE 17
- **5.1** Mode Selection 17
- **5.2** Continuous Suction 17
- **5.3** Strength Of Suction 17
- **5.4** Automatic And Footswith Activation Of Suction 17
  - **5.4.1** Automatic Activation 17
  - **5.4.2** Manual Activation 17
- **5.5** Occlusion Detection 18
- **5.6** Other Settings 19
  - **5.6.1** Extended Evacuation Time 19
- **5.7** Shutdown Procedure 19

6.0 BASIC TROUBLESHOOTING 20
6.1 Noise 20
6.2 Suction 20
6.3 Overheating 20
6.4 Fault Messages 20

7.0 MAINTENANCE 21
7.1 General Maintenance Information 21
7.2 Equipment Cleaning 21
7.3 Periodic Inspection 21
7.3.1 WARNING: For Testing or Servicing 21
7.4 Transportation, Storage, and Shipment 21
7.5 Disposal 21

8.0 SPECIFICATIONS 22
8.1 Input Power 22
8.2 Mains Internal 22
8.3 Mains Frequency Leakage 22
8.4 Regulatory Compliance 22
8.5 Line Regulation 22
8.6 Environmental Protection 22
8.7 Power Cord 23
8.8 System Dimensions and Weight 23
8.9 Touchscreen 23
8.10 Electromagnetic Compatibility 23
8.11 Radio Frequency Identificaiton 27
8.11.1 FCC Compatibility 27
8.11.2 Industry Canada Statement 28
8.11.3 RF Exposure Statement 28
8.11.4 European Conformity (PX5-220 and PX5-220P1 units only) 28

9.0 OUTPUT CHARACTERISTICS 29
9.1 Output Characteristics 29
9.1.1 Flow, Capture, Sound 29
9.1.2 Filter Life 30

10.0 SOFTWARE LICENSE AGREEMENT 31

1.0 GENERAL

1.1 Introduction

The CONMED PlumeSafe® X5 Smoke Management System is a smoke evacuation unit designed to effectively capture and filter surgical smoke. The CONMED PlumeSafe® X5 Smoke Management System has been designed with a vacuum motor which is used to draw the surgical smoke from the surgical site via a smoke evacuation accessory and into the ~~CONMED PlumeSafe® X5 Smoke Management Filter~~ where the surgical smoke is processed by multiple stages of filtration. Each ~~CONMED PlumeSafe® X5 Smoke Management Filter~~ contains five stages within to capture smoke.

The first stage filtration is a prefilter whose function is to trap and remove gross particulate.

The second stage filtration is ULPA grade (Ultra Low Penetration Air) filter whose high-tech patented (U.S. Patent #5874052) design captures particulates and micro-organisms as small as 0.01 microns at an efficiency of 99.9995%.

The third and fourth stages of filtration are comprised of a proprietary combination of activated carbon and impregnated ~~carbon~~ designed to adsorb the chemical constituents of surgical smoke such as Benzene, Toluene, P-xylene, as well as other Volatile Organic Compounds (VOCs) and ~~smells.~~

The fifth stage of filtration is designed to capture residual particulate and carbon dust.

The electronic controls on the face panel of the CONMED PlumeSafe® X5 Smoke Management System have been designed to be "user friendly" to help facilitate unit set up and operation. Please refer to **4.0 Touchscreen User Interface And System Controls** and **5.0 Setup For Clinical Use** for Operating Instructions.

The disposable ~~filter~~ is completely enclosed to protect the healthcare personnel from potential contamination during filter changes.

NOTE: It is important that the instructions supplied with this equipment are read, understood, and followed to ensure the safe and effective use of this equipment.

1.2 Intended Use/Indications For Use

The ~~PlumeSafe® X5 Smoke Management System~~ is designed to remove and filter smoke and aerosols from a surgical site produced during electrosurgical and laser procedures.

1.3 System Scope and Features

1.3.1 Scope

The CONMED PlumeSafe® X5 Smoke Management System comes in ~~six orderable configurations~~:

PX5-120	PlumeSafe® X5 Smoke Evacuation Unit with PlumeSafe® X5 Smoke Evacuator Filter, 100V-120V 50/60 Hz
PX5-120NF	PlumeSafe® X5 Smoke Evacuation Unit, 100V-120V 50/60 Hz
PX5-220	PlumeSafe® X5 Smoke Evacuation Unit with PlumeSafe® X5 Smoke Evacuator Filter, 220V-240V 50/60 Hz
PX5-220NF	PlumeSafe® X5 Smoke Evacuation Unit, 220V-240V 50/60 Hz
PX5-220P1	PlumeSafe® X5 Smoke Evacuation Unit with PlumeSafe® X5 Smoke Evacuator Filter, 220V-240V 50/60 Hz
PX5-220P1NF	PlumeSafe® X5 Smoke Evacuation Unit, 220V-240V 50/60 Hz
PX5-135-22	CONMED PlumeSafe® X5 22 mm Filter (Single Pack)
PX5-1354-22	CONMED PlumeSafe® X5 22 mm Filter (Four Pack)

Items with "NF" at the end of the catalog number designate a unit that does not ship with a filter.

Compatible filters are listed in **1.5.1 CONMED PLUMESAFE® X5 Filters**.

1.4 System Overview

The CONMED PlumeSafe® X5 Smoke Management System features a fully integrated capacitive touchscreen display which allows the selection of modes, changes to suction settings, and adjustment of additional settings such as occlusion detection, extended evacuation time, ~~and brightness~~. This section will provide an overview of how to navigate the PlumeSafe® X5 Smoke Management System.

1.4.1 Major Components

The ~~smoke management systems~~, including the smoke evacuation unit and accessories, provide the ability to remove surgical smoke at the source; thereby reducing patients' and clinicians' exposure to harmful surgical smoke. The ~~PlumeSafe® X5 Smoke Management Systems~~ have been designed with a high-suction, high-flow-rate vacuum motor. The sound insulated motor is used to draw the surgical smoke from the surgical site through the vacuum tubing and into the ~~PlumeSafe® X5 ULPA filter~~, where the surgical smoke is processed by a series of ~~filters.~~ The use of a single, disposable filter simplifies the installation and removal during filter replacement. The filter is completely enclosed to protect the healthcare personnel from potential contamination during filter changes. The unit can be placed on any flat surface or on a boom.

WARNING: Please refer to shelf or boom manufacturer's indications for maximum weights.

One ~~PlumeSafe® X5 ULPA filter~~ contains five different stages within to capture the smoke plume:

- First-stage filtration is a prefilter to trap and remove gross particulate and casual fluid.
- Second-stage filtration is a ULPA (Ultra Low Penetration Air) grade filter whose high-tech patented design captures particulates and micro-organisms from ~~0.1~~ to 0.2 microns at an efficiency of 99.9995%.
- Third-stage filtration uses the highest-grade virgin-activated carbon. Surgical smoke and aerosols may constitute a health hazard to healthcare professionals who are subjected to prolonged exposure. ~~The filter contains activated carbon.~~
- Fourth-stage filtration is a woven fiberglass filtration media used to reduce the amount of activated carbon fines from migrating out of the filter.

Fifth-stage filtration uses activated alumina impregnated with $KMnO_4$ that is designed to absorb odor causing chemicals like Hydrogen Sulfide and Sulfur Dioxide.

1.4.2 Front Panel

Figure 1.1: Front View

a. ~~CONMED PlumeSafe® X5 Smoke Management Filter~~
b. ~~Filter~~ Connection with SafePort™ Technology
c. Filter Handles to Remove Filter
d. Capacitive Touch Screen User Interface (UI)
e. Standby Switch

1.4.3 Rear Panel

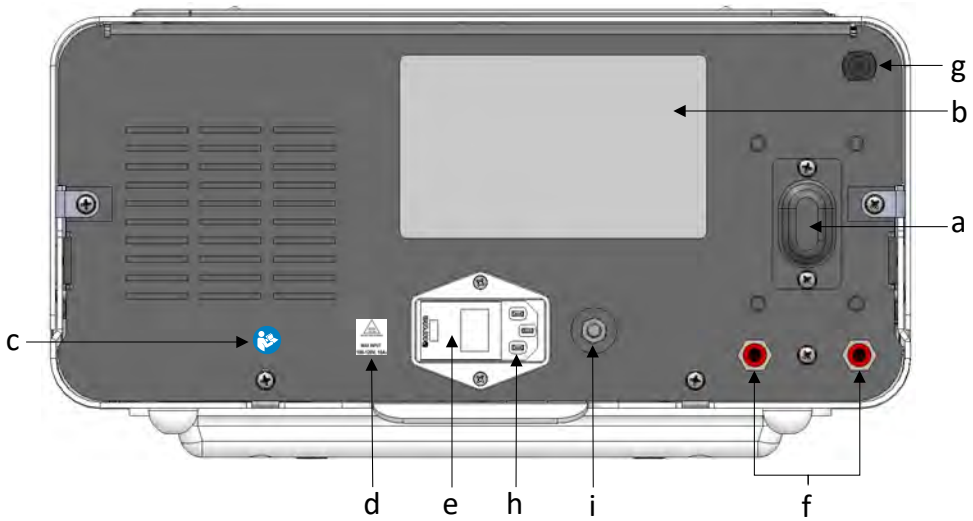

Figure 1.2: Rear View

a. USB Port
b. Product Label:
   Specifies model number, serial number, Unique Device Identification two-dimensional bar code, nominal line voltages, frequency, current, and CONMED contact information.
c. Refer to Instruction Manual Prior to Placing Equipment in Service
d. Power and Fuse Rating Label
e. Fuse box
f. Remote Switch Activation (RSA) Device Ports
g. Footswitch
h. Power Cord Receptacle
   Supplies AC mains power to the smoke evacuation unit. It should only be connected to a source of power corresponding to those listed on the ~~nameplate.~~
i. Equipotential Ground Connector

Chassis ground connection is suitable for attachment of standard auxiliary grounding cable when required for additional protection against low-frequency risk current.

1.4.4 Top Panel

Figure 1.3: Angled View

a. Docking Ports:
These ports are designed for electrical docking between the ~~PlumeSafe® X5 SEU~~ and MEP-1 ESU. By placing the ESU on top of the SEU, using the alignment arrows (b) as guides, the SEU and ESU can communicate, eliminating the need for additional cable accessories.
NOTE: All elements on these two ports are safe to touch and are not electrically active.

b. Alignment Arrows:
These arrows mirror arrows on the bottom of the MEP-1 ESU. The two sets of aligned arrows indicate proper alignment and stacking of the units.

1.4.5 Bottom Panel

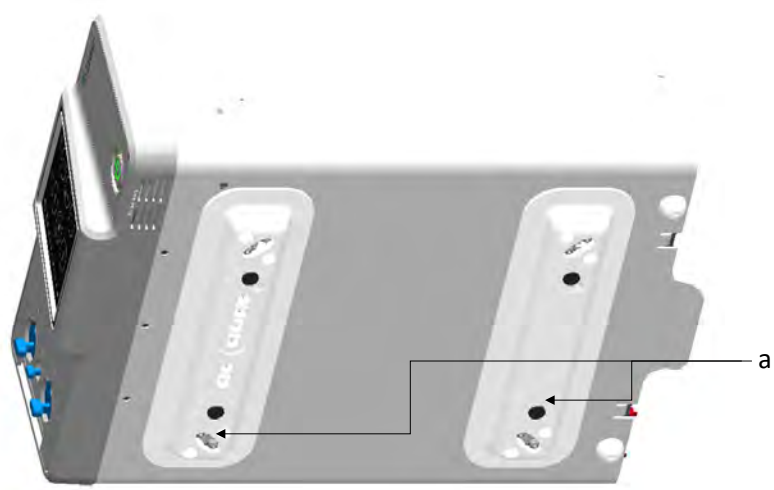

Figure 1.4: Underbody View

~~1.~~ Docking Feet:
These non-slip feet are designed to keep the unit body from sitting directly on a surface and from ~~sliding around~~.

1.4.6 Explanation of Symbols

Front Panel and Sides			
	Stand-by push-button		Alignment Arrows for docking and/or nesting the SEU and ESU.

Touch Screen Display			
	Extended Evacuation Time After Deactivation		Filter Empty
	Service Required		Filter Full
	Increase Suction/Time Extension		Open Mode
	Decrease Suction/Time Extension		Electrosurgical Pencil Mode
	Active continuous suction		Laparoscopic Mode
	Occlusion Detection		

Remove empty boxes

Back Panel			
	Equipotential Ground Stud	**IP31**	Enclosure Resists Ingress of Vertically Falling Water Drops and Ingress of Solid Foreign Objects > 2.5 mm.
	Refer to Instruction manual Prior to Placing Equipment in Service		USB Port – CONMED USE ONLY
	Footswitch Port	**RSA 1** **RSA 2**	Remote Switch Activation Ports (For use with EZ Link and Direct Connect Cables).
	Hot Exhaust. Do not touch. Do not place the rear of the unit within 1 ft from any surface.	**25V/1A MAX**	The maximum voltage and amperage that may be applied across RSA 1 and RSA 2 ports.
MAX INPUT	The maximum voltage and amperage that may be applied to the unit.	T 10A, 250V **REPLACE FUSES AS MARKED BREAKING CAPACITY: H**	Fuse Rating and Breaking Capacity. Replace Fuse only with Type and Rating as Shown.

NOTE: ~~Refer to eSymbology List: P000022743~~

1.5 Accessory Compatibility

As standard practice, CONMED suggests that when considering the use of other manufacturers' accessories with the CONMED PlumeSafe® X5 SEU, customers should consult with the manufacturer to obtain detailed instructions for use and warnings to determine compatibility.

CONMED instructions for use can be accessed by visiting **https://eifu.conmed.com**.

1.5.1 CONMED PLUMESAFE® X5 Filters

- CONMED PlumeSafe® X5 22 mm Filter (Single Pack): PX5-135-22
- CONMED PlumeSafe® X5 22 mm Filter (Four Pack): PX5-1354-22

1.5.2 Footswitch

- CONMED Pneumatic Footswitch: FS10004

1.5.3 Cables

- CONMED ESU Direct Connect Cable: DCCM01
- Covidien ESU Direct Connect Cable: DCCOV01

1.5.4 Remote Activation

- EZLink® Automatic Activation Device: EZLINK01

1.5.5 Fluid Trap

- CONMED Virosafe® Fluid Trap: VSFT10

1.5.6 Other

Contact your CONMED representative for ordering information and a complete list of compatible products including electrosurgical smoke pencils compatible with IEC 60601-1, ~~adaptors~~, hoses and tubing, and reducer fittings.

2.0 CAUTIONS AND WARNINGS

Please note that all Cautions and Warnings should be read and understood before any use of this equipment.

This device does not have any ~~contradictions~~ for use.

2.1 Warnings

- Read this manual thoroughly and be familiar with its contents prior to using this equipment.
- Read all instructions before installing accessories operating this equipment. Failure to do so may result in damage to the unit and personal injury.
- This equipment is intended for use by trained healthcare professionals only.
- Federal law (United States of America) restricts this device to be used by, or on the order of a physician.
- This system is to be used only with approved accessories. Never connect the unit to chest tubes, closed wound drains, tracheal tubes, or any other accessory not specifically approved by CONMED.
- Removal of all accessories from the filter shall be done directly at the filter/accessory interface. Failing to do so may cause damage to the accessory or harm the user.
- This equipment may cause radio interference or may disrupt the operation of nearby equipment. This equipment is also susceptible to other equipment in the operating room, including portable or mobile communication equipment, that may produce EMI which can affect the function of the SEU. It may be necessary to take mitigation measures, such as re-orienting or relocating the CONMED PlumeSafe® X5 Smoke Management System or shielding the location to reduce these interferences.
- Test this equipment prior to a surgical procedure.
- Disconnect the unit from the electrical outlet prior to inspecting system components.
- The CONMED PlumeSafe® X5 Smoke Management System is only intended and suitable for the applications that are mentioned in the operating instructions and by the intended use statement.
- To maximize patient safety, the tubing or wand should not come into direct contact with tissue. Otherwise, patient injury may result.
- The smoke evacuation unit produces a strong vacuum. Adjust the airflow and the position of the inlet end of the wand or tubing to prevent patient injury and to prevent suction of surgical materials and surgical specimens.
- If the smoke evacuation unit is activated while the airflow is set to a high speed, it may produce a sudden, strong suction action. Check the airflow setting before activating the smoke evacuation unit to prevent patient injury and to prevent suction of surgical materials and surgical specimens.
- Only the CONMED ~~brand~~ PlumePort® SEO accessory may be used with Laparoscopic mode. Using any other accessory in this mode may result in patient injury.
- The ~~CONMED PlumeSafe® X5 Smoke Management Filters~~ and single-use accessories are completely disposable. Please dispose of according to your local codes or regulations and hospital policy. These products may be disposed of or incinerated, whichever is appropriate for your institution.
- The ~~CONMED PlumeSafe® X5 Smoke Management Filters~~ captures potentially hazardous particles. Handle used filters as you would any biohazard material. A disposable biohazard bag is provided with each filter. Dispose of filters according to your institution's hazardous waste procedures and local requirements.
- Only ~~CONMED PlumeSafe® X5 Smoke Management Filters~~ were demonstrated to be compatible with the CONMED PlumeSafe® X5 Smoke Management System. Do not use any other filters with this system.
- Care should be taken to route the power cord, foot pedal, smoke evacuation accessories and EZLink™ Automatic Activation Device cable as to not cause a tripping hazard or crimping of cords.
- Do not operate this device in the presence of flammable or explosive gases, or in oxygen-rich environments.
- To avoid risk of electric shock, this equipment must only be connected to a supply mains with protective earth. Grounding reliability may only be achieved if the smoke evacuation system is connected to a hospital grade outlet. Use only with the power cord provided with the unit and always plug into a grounded outlet.
- The CONMED PlumeSafe® X5 Smoke Management System motor generates heat during operation. To prevent exposure to heat generated by the motor, avoid hand placement on or around the exhaust louvers on the back of the unit during or immediately after operation.
- If this equipment is placed adjacent to or stacked with other equipment, verify normal operation. This also applies to placement of the ~~SEU~~ on any mobile cart.
- When transporting the ~~unit~~ on a cart and/or installing the ~~unit~~ onto a cart and/or shelf, ensure that the unit is flat (feet contact the surface) to prevent unit from falling.
- Do not place any other equipment or items on top of the ~~unit~~ unless listed as compatible in this Operator's Manual.
- Do not remove the black covers or lift the unit by the covers on the top of the ~~unit.~~ Doing so may damage the ~~unit~~ or harm the operator.
- Refer periodic inspection to qualified biomedical technical personnel.

- Do not modify this equipment in any way. Changes or modifications not expressly approved by CONMED could void the user's authority to operate the equipment.
- Do not remove any covers or panels exposing internal components of the ~~PlumeSafe® X5 Smoke Management System~~. Contact Customer Service for assistance.
- This device is not intended for evacuation of fluid. If fluid is expected to be aspirated to the ~~Filter~~, fluid collection devices must be installed with the vacuum hose assembly. Failure to install a fluid collection device could cause filter blockage and electrical damage.
- Do not place containers (i.e. fluid trap) with liquid on top of the unit. Wipe spilled or splashed liquids from the ~~unit~~ immediately. Contact of liquid and electrical connections may result in an electric shock to the user.
- If the smoke evacuation system becomes wet, unplug the ~~smoke evacuation system~~ from the mains outlet. Wipe or allow to dry before proceeding with procedure.
- Do not use if the ~~unit~~ and/or ~~filter~~ are damaged, or if text, icons, or labels are illegible.
- Use appropriate cleaning agents, as listed in **7.0 Maintenance**. Use of improper cleaning agents could affect system labeling or markings.
- Failing to replace fuses as specified may results in fire or smoke. See ~~**3.3 Filter Installation**~~ on fuse replacement.
- The warranty on this product is void if any of these warnings are disregarded.
- To avoid the risk of electric shock, the power cord of the ~~smoke evacuation unit~~ must be connected to a properly polarized and protectively grounded power source whose voltage and frequency characteristics are compatible with those listed on the ~~name plate~~ of the generator in the back.
- Always disconnect the power cord in case of fire, emergency, or if the unit controls are unresponsive. Position the ~~unit~~ so that the power cord inlet may be easily reached to disconnect the power cord.
- Always stow unused accessories in a safe, insulated location, such as a holster. Do not place active accessories on the patient.
- To avoid the risk of accidental activation of the wrong mode, confirm the desired mode is selected prior to use. Properly position the ~~unit~~ to assure the operator or their support personnel can readily verify the settings.
- ~~Flammable agents used for cleaning or disinfecting the surgical area, or as solvents of adhesives, should be allowed to porate before surgical equipment is used.~~ Only non-flammable agents should be used for cleaning and disinfection.

2.2 Cautions

- During initial set up, inspect the ~~smoke evacuation unit and filter~~ for any damage that may have occurred during shipping. If damaged, do not use or attempt to repair. Contact Customer Service for assistance.
- Inspect the ~~smoke evacuation system and filter~~ before each use. If there is evidence of damage, do not use. Contact Customer Service for assistance.
- Do not block either the tubing or the ~~filter~~. If either becomes occluded or significantly restricted, the motor/blower may overheat and cause the unit to fail.
- Care must be exercised in the installation of hoses and adapters. Failure to follow the procedures outlined in this manual may result in overheating of the motor and may void the ~~unit~~ warranty.
- Connect accessories to the proper receptacle type. Otherwise, the ~~smoke evacuation system~~ may not function properly.
- Appropriate-length tubing and cords should be selected based on the setup of the operating room in use.
- The installation of this equipment must be performed such that the intake and exhaust vents located on the bottom of the system are not obstructed. Failure to properly install the unit may cause reduced performance, damage and/or cause the system to be inoperable and may void the warranty.
- The CONMED PlumeSafe® X5 Smoke Management Filter should be replaced when indicated by the ~~SEU~~.
- Connect the ~~SEU~~ to a dedicated power outlet.
- There are no user serviceable components in the ~~PlumeSafe® X5 Smoke Management System~~ other than replacement of the fuses. For all other matters, refer service to CONMED Service.

2.3 Serious Incidents

Immediately report any serious incidents with the use of this device to the CONMED Customer Service Department or your local CONMED representative.

Email: CustomerExperience@conmed.com

3.0 INSTALLATION

This section contains initial installation and preliminary inspection for the CONMED PlumeSafe® X5 Smoke Management System.

3.1 Initial Unpacking and Inspection

The CONMED PlumeSafe® X5 Smoke Management System consists of the smoke evacuation unit, filter, power cord, and other accessories shipped in separate boxes, such as direct connect cables, and smoke evacuation disposables.

Unpack the ~~smoke evacuation unit~~, power cord, and ~~filter~~ upon receipt and physically inspect for any obvious damage that may have occurred during shipment.

A hospital-qualified biomedical technician should perform this inspection. Notify the carrier and your CONMED representative immediately if any damage is found.

3.2 Unit Installation

3.2.1 CONMED PLUMESAFE® X5 SEU Installation

- If placing the ~~smoke evacuation unit~~ on a boom or a shelf, ensure all feet of the ~~unit~~ are placed on a flat surface with proper clearance and no obstructions around the exhaust.
- Ensure the black covers on the top of the ~~unit~~ are in the closed position.
- Plug in the CONMED provided power cord in the rear of the ~~unit~~.
- Plug the power cord into a medical grade wall outlet.

3.2.2 Pneumatic Footswitch Installation

- Connect the Footswitch to the Footswitch Port on the back panel by pressing it over the receiver cone.
- When the footswitch is plugged in, suction may be turned on or off by depressing the footswitch pedal once for each operation.

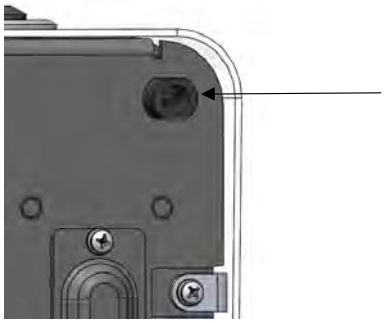

Figure 3.1: Pneumatic Foot Switch Port

3.2.3 EZLink® or Direct Connect Cable

EZLink® devices or Direct Connect Cables may be connected to either of the two available Remote Switch Activation ports (RSA 1 and RSA 2). If present, remove the red protective covers before use.

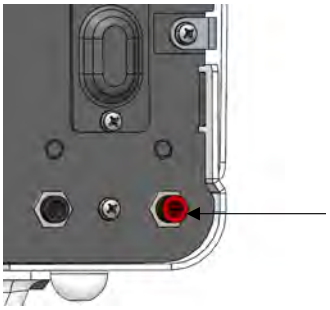

Figure 3.2: Dual Automatic Activation Device Ports

3.2.4 Sealed Unit Connection to Central Evacuation Systems

PX5-220P1 and PX5-220P1NF have 1-1/4″ elbow adaptors that may be connected to any CONMED supplied 1-1/4″ tubing (Catalog VT10306 recommended) by pressing one end of the tubing over the 90 deg elbow barb. The free end of the tubing may then be attached to wall suction.

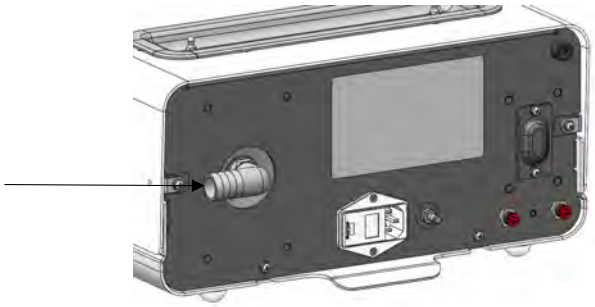

Figure 3.3: Sealed Unit

3.3 Filter Installation

3.3.1 Filter Installation Instructions

1. Remove the ~~PlumeSafe® X5 Filter~~ from the shipping box and discard any protective wrapping. Examine all filters for damage during shipping and storage. Do not install any filter with visible signs of structural damage.
2. Insert the ~~CONMED PlumeSafe® X5 Smoke Management Filter~~ into filter receptacle. Be sure that the filter is seated completely against the bottom of the filter chamber.

WARNING: This device is not intended for evacuation of fluid. If fluid is expected to be aspirated using the ~~CONMED PlumeSafe® X5 Smoke Management Filter or the CONMED PlumeSafe® X5 Smoke Management System~~, fluid collection devices must be installed with the vacuum hose assembly. Failure to install a fluid collection device may cause filter blockage and/or electrical damage.

Figure 3.4: Filter Installation

3.3.2 Filter Removal Instructions

1. After the ~~CONMED PlumeSafe® X5 Smoke Management Filter~~ has been exhausted and requires changing, turn the ~~smoke evacuation system~~ off and disconnect any accessory tubing attached to the ~~filter~~.
2. Grip the filter handles on each side and pull the ~~CONMED PlumeSafe® X5 Smoke Management Filter~~ from the smoke evacuation system and dispose of in accordance with hospital policy. The ~~CONMED PlumeSafe® X5 Smoke Management Filter~~ may be disposed of or incinerated.
3. Clean the unit with appropriate mild disinfectant prior to re-use. Follow the indicated instructions for maintenance and installation of a new ~~CONMED PlumeSafe® X5 Smoke Management Filter~~.

PRECAUTION: Using any other filter or accessory not supplied by CONMED may cause damage to the system and/or cause the system to be inoperable and may void the warranty.

WARNING: The ~~CONMED PlumeSafe® X5 Smoke Management Filter~~ should be changed when the Filter Life Indicator touch screen indicates an expired filter. Failure to change this filter may result in decreased efficiency and contamination of the electric motor, ~~vacuum pump~~, ~~and~~ sound absorbing media within the system, or non-operation of ~~smoke evacuation unit~~.

3.3.3 Fluid Trap Installation

1. After a ~~CONMED PlumeSafe® X5 Smoke Management Filter~~ has been installed, the ~~option~~ fluid trap may be connected to manage fluid ingress.
2. Open the top 22 mm (7/8″) port of the ~~filter~~. Remove the protective blue cover from the side of the fluid trap that has a short piece of tubing extending from the body. Press the fluid trap directly onto the 22 mm (7/8″) port. Make sure the fluid trap is secure.
3. The fluid trap may now be connected to any CONMED provided 22 mm (7/8″), 6.35 mm (1/4″), or 9.5 mm (3/8″) accessory at one of the three matching ports on the fluid trap.
4. Ensure ports on both the ~~filter~~ and fluid trap remain closed if not in use.

WARNING: This device is not intended for evacuation of fluid. If fluid is expected to be aspirated to the ~~Filter~~, fluid collection devices must be installed with the vacuum hose assembly. Failure to install a fluid collection device could cause filter blockage and electrical damage.

WARNING: Do not place containers (i.e. fluid trap) with liquid on top of the unit. Wipe spilled or splashed liquids from the ~~unit~~ immediately. Contact of liquid and electrical connections may result in an electric shock to the user.

WARNING: If the ~~smoke evacuation system~~ becomes wet, unplug the ~~smoke evacuation system~~ from the mains outlet. Wipe or allow to dry before proceeding with procedure.

Figure 3.5: Fluid Trap Installation

3.4 Preliminary Checks

Preliminary checks are recommended upon installation to avoid unnecessary delays in surgery. Refer to **1.4 System Overview** for the location of controls and connectors. The following items are required to perform the preliminary testing:

- CONMED PlumeSafe® X5 SEU
- CONMED PlumeSafe® X5 Filter
- Hospital-grade power cord

3.4.1 Checks

1. Connect the power cable to a properly grounded and polarized mating power receptacle of the proper voltage and frequency (**8.0 Specifications**).
2. Install a new ~~filter~~.
3. Press the standby button on the front panel of the ~~unit~~. The standby button will turn green, and the unit will go through its internal self-diagnostics.
4. Ensure at least one filter port is open.

5. Verify the touch screen is operating correctly by selecting one of the three modes and pressing the continuous suction icon (**1.4 System Overview**). Adjust the suction up or down using the plus or minus icons. Repeat for each of the three modes.

3.4.2 Fuse Replacement

WARNING: Only a qualified biomedical technician should perform fuse replacement steps. If additional help is needed, refer servicing and testing to authorized CONMED Service.

WARNING: Disconnect the unit from the electrical outlet prior to inspecting system components.

1. Disconnect ~~unit~~ from electrical outlet and ensure no power is provided to the unit.
2. A small flat head screwdriver is required for these steps.
3. Open fuse box door by inserting a flathead screwdriver along the left-hand side and then carefully prying the cover open.
4. Next, slip the screwdriver head into the notch (d) on the side of the red fuse box.
5. Carefully pry the red box up using point B as a leverage point and remove the fuse holder.
6. Replace both fuses using only the recommend voltage/amperage ratings. When placing the new fuses, make sure each fuse is fully seated towards the four exposed prongs of the fuse box. Fuses can be ordered through CONMED Customer Service.

Smoke Evacuation Unit	Fuse Description	Part Number
PX5-120 PX5-120NF	FUSE CERAMIC 10A 250VAC 5X20 mm, Slow Blow	P000028134
PX5-220 PX5-220NF	FUSE CERAMIC 5A 250VAC 5X20 mm, Slow Blow	P000028133
PX5-220P1 PX5-220P1NF	FUSE CERAMIC 5A 250VAC 5X20 mm, Slow Blow	P000028133

*Breaking Capacity of fuses: 1.5kA.

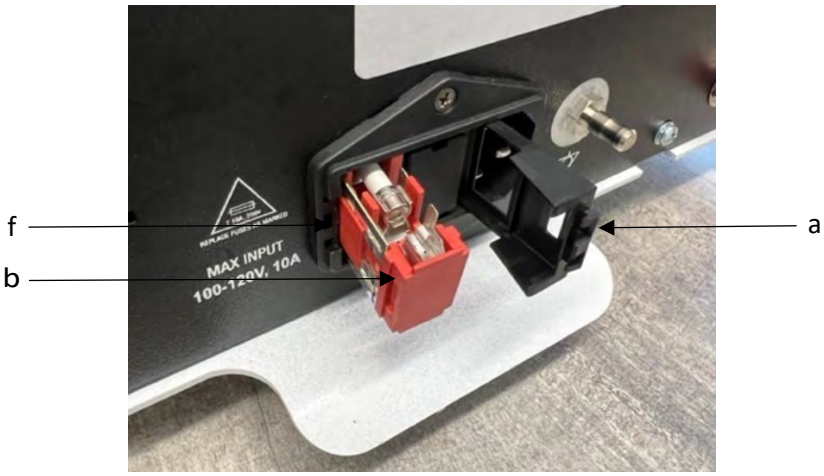

Figure 3.6: Fuse Door

Figure 3.7: Fuse Elements

a. Fuse Box Door
b. Fuse Box
c. Fuse 1 of 2
d. Fuse Box Pry Recess
e. Fuse Box Prongs
f. Prying surface

Figure 3.8: Fuse Location

PRECAUTION: Fuses must be placed nearest the Fuse Box Prongs as shown. If the ~~unit~~ fails to power on, check the position of the fuses.

4.0 TOUCHSCREEN USER INTERFACE AND SYSTEM CONTROLS

The CONMED PlumeSafe® X5 SEU features a fully integrated touchscreen display which allows the selection of modes, changes to flow, and extended evacuation time settings. This section will provide an overview of how to navigate through the ~~SEU~~'s touchscreen. The ~~SEU~~ will store the most recent user settings.

4.1 Touch Screen

4.1.1 Touch Screen Layout

The ~~CONMED PlumeSafe® X5 Smoke Management System~~ contains selectable modes of operation designed to optimize filter life and flow control based on the clinical scenario. Modes of operation include Open Tubing mode, Electrosurgical Pencil mode, and Laparoscopic mode.

Figure 4.1: Touchscreen

a. Extended Evacuation Time
b. Service Required
c. Occlusion Detection Mode
d. Suction/Time Extension Increase
e. Open Tubing Mode
f. Suction Setting or Time Extension Setting
g. Continuous Use
h. Pencil Mode
i. Suction/Time Extension Decrease
j. Laparoscopic Mode
k. Filter Depleted Icon
l. Filter Full Icon
m. Filter life remaining

4.1.2 Filter Life Icons

The filter life indicator on the touch screen control panel provides a visual indication of the status of the life of the ~~filter~~ (**Figure 4.2: Filter Life**). As the filter is used, the filter life indicator for the CONMED PlumeSafe® X5 Smoke Management System will automatically adjust. Information about the amount of time each individual filter has been used is stored via the RFID tag of the filter. When a new or previously used filter is inserted, the smoke evacuation unit reads the stored information from the tag and updates the filter life indicator.

Figure 4.2: Filter Life

PRECAUTION: Using the filter lifetime and RFID Technology is a measure of time only.

Laparoscopic Mode = 35 hours of filter life

Electrosurgical/Diathermy (Pencil) Mode = 25 hours of filter life

Open Tubing Mode = 18 hours of filter life

When the maximum filter life is consumed, the filter expiration icon will flash, indicating that a filter replacement is needed (**Figure 4.2: Filter Life**). Replace the ~~filter~~ as indicated in this manual.

During operation, if a ~~filter~~ expires the system will not turn off suction and will remain running until the system is powered down or one-hour passes, whichever comes first. After this point, the ~~unit~~ will no longer operate until a new ~~filter~~ is inserted into the system. It is always best practice to replace an expired filter immediately; however, a validated contingency life is built into the filter to ensure no interruption to the operative procedure.

4.2 Additional System Notifications

If the ~~unit's~~ motor reaches end of life, or if the unit experiences internal faults, the service icon will begin flashing at the top of the user interface. See **Figure 4.3: Service Light**.

Figure 4.3: Service Light

If this notification occurs and power-cycling the unit (pressing the standby button) or unplugging the unit from power does not resolve the issue, the unit has become inoperable. Contact CONMED to arrange service of the CONMED PlumeSafe® X5 Smoke Management System.

5.0 SETUP FOR CLINICAL USE

1. Plug the CONMED PlumeSafe® X5 SEU into to a hospital grade power outlet.
2. Inspect and insert a CONMED PlumeSafe® X5 Filter into the matching receptable of the PlumeSafe® X5 SEU.
3. Inspect and insert the desired hand-held accessories ~~on to~~ the ~~filter~~.
4. Turn on the ~~smoke evacuation unit~~ by pressing the stand-by button, which will illuminate green. The smoke evacuation unit will conduct internal self-diagnostics during start up.

NOTE: If the ~~smoke evacuation unit~~ illuminates the service light, or otherwise fails to respond during power-up, the generator has failed one of its internal tests. Power cycle the unit to see if it resolves the issue.

After the unit self-diagnostics are complete, the smoke evacuation unit will illuminate the screen and is ready for use.

5.1 Mode Selection

The CONMED PlumeSafe® X5 SEU touchscreen has three primary modes: Open, Electrosurgical Pencil, and Laparoscopic (See **4.1.1 Touch Screen Layout**). Select the desired option for the specific procedure by touching the appropriate icon on the touchscreen. Only one mode may be active at a given time.

During an open procedure in which a smoke evacuation hose will be utilized, please select the Open Tubing mode icon.

When using either an adapter to an electrosurgical pencil or an integrated smoke plume evacuation pencil such as Buffalo Filter's PlumePen™ product line, please select the Pencil mode icon.

When attaching to a surgical cannula during laparoscopic procedures, select the Laparoscopic mode icon. Laparoscopic mode may only be used with the PlumePort® SEO device. Failure to do so may result in a loss of pneumoperitoneum and may cause patient harm (See **2.1 Warnings**).

When the desired mode of operation is selected, the associated icon on the touch screen illuminates.

5.2 Continuous Suction

Activation of continuous suction is achieved by pressing the Continuous Suction icon. If the continuous suction is activated, the Continuous Suction icon will brighten.

5.3 Strength Of Suction

The strength of suction may be adjusted by pressing the plus and minus icons on the touch screen. The suction setting is shown by the numbers on the left side of the user.

5.4 Automatic And Footswith Activation Of Suction

5.4.1 Automatic Activation

Automatic Activation of the smoke evacuation unit is possible via the EZLink Automatic Activation Device, Direct Connect Cables, or direct docking with the CONMED MEP-1 ESU. ~~The EZLink device attaches to the electrosurgical pencil cable, senses when the current is flowing through the cable, and then in turn activates smoke evacuation~~. Similarly, Direct Connect Cables can connect the ~~PlumeSafe® X5 Smoke Management System~~ to other electrosurgical generators via their shared phone jacks (Automatic Activation Device ports):

- CONMED – MEP-1 ESU, System 5000, and System 2450
- Valleylab™ - Force Triad, FX 8, and FT 10

The same functionality is achieved without cables or accessories, when docked directly with the MEP-1 ESU. To achieve this docking, the MEP-1 ESU should be placed on the top of the ~~PlumeSafe® X5 SEU~~, using the alignment arrows as a guide. Once docked, the ~~PlumeSafe® X5 SEU's~~ suction will be activated ~~anytime~~ the pencil is activated. Note the pencil must be connected to the ESU for this functionality to be available. This functionality can only be turned off by undocking the ESU from the SEU, or by through the touchscreen of the ESU (See the ESU Operator's Manual at **https://eifu.conmed.com**).

5.4.2 Manual Activation

A pneumatic footswitch (ordered separately) may be used to manually activate the ~~smoke evacuation unit~~. The footswitch allows the unit to be turned on or off by depressing the footswitch pedal. It mimics the behavior of pressing the fan icon on the ~~PlumeSafe® X5 SEU's~~ touchscreen.

To utilize one of the desired activation accessories referenced above, attach the accessory to the appropriate location on the back panel of the ~~unit~~ according to **Figure 1.2: Rear View**. For directions on using the accessory, please see instructions for use that accompany that device.

5.5 Occlusion Detection

The ~~CONMED PlumeSafe® X5 Smoke Management System~~ is equipped with occlusion detection for use in Open Tubing mode. The default setup for the device has this option disabled. If the user preference is to utilize occlusion detection, select the Occlusion icon on the top right corner of the user interface. When activated, this icon will illuminate, and the ~~smoke evacuation unit~~ will actively monitor for occlusions. When an occlusion is detected, the occlusion icon will flash and the motor will cycle on and off, monitoring to see if the obstruction has been cleared. If the obstruction is cleared, the motor will stop cycling, the occlusion icon will stop flashing, and the system will resume normal operation with occlusion detection still active. The user has the option of disabling detection at any time by pressing the occlusion icon.

Figure 5.1: Occlusion Notification

5.6 Other Settings

5.6.1 Extended Evacuation Time

The CONMED PlumeSafe® X5 Smoke Management System also allows the user to increase or decrease the amount of time the CONMED PlumeSafe® X5 Smoke Management System suction remains active after deactivation of the electrosurgical accessory. This evacuation extension is for the purpose of capturing residual smoke after the ~~electrosurgical unit~~ is deactivated. To adjust extension time, press the stopwatch icon in the top left corner of the user interface (**Figure 5.2: Extended Evacuation Time Adjustment**).

Figure 5.2: Extended Evacuation Time Adjustment

Upon pressing the stopwatch icon, select icons will illuminate green. Depress the plus and minus icons to adjust the extended evacuation time from 0 to 10 seconds. The unit will return to normal operation after a few seconds.

If the EZLink Automatic Activation Device is used, additional suction time is programmed into that device. By default, the EZLink is programmed with 3 seconds of extended suction time. The time extension on the smoke evacuation unit will be added to the time programmed into the EZLink. If the EZLink is programmed to 3 seconds of extension time, and the CONMED PlumeSafe® X5 Smoke Management System extension time is set to 8, the actual total time the user experiences will be 11 seconds.

5.7 Shutdown Procedure

1. At the end of use, turn off the ~~unit~~ and disconnect all accessories from the filter.
   WARNING: Removal of all accessories from the ~~filter~~ shall be done directly at the filter/accessory interface. Failing to do so may cause damage to the accessory or harm the user.
2. Stow the attached footswitch (if used) ~~into the storage positions on the cart~~.
3. Unplug and wrap the power cord ~~and stow the cart (if used)~~.
4. ~~Unlock the wheel castor and store the unit at its storage location~~.

6.0 BASIC TROUBLESHOOTING

6.1 Noise

The higher the suction setting, the greater the noise. Minimize noise by using a lower suction setting. Effectiveness of a lower suction setting can be maximized by using a larger diameter tubing or positioning the tubing closer to the source of smoke, or both. ~~Making sure~~ all ports on the filter, other than the active one, are fully closed.

6.2 Suction

- Use of accessories with long tubing or tangled tubing with sharp bends will reduce flow.
- Unresolved occlusions will reduce flow.
- Use of a fluid trap will reduce flow.
- Use of the ~~unit~~ at higher altitudes will reduce flow.

6.3 Overheating

While every effort has been made to prevent overheating, it may still be possible with the right combination of events. Each unit/motor has a built-in thermal switch that protects the motor and unit from damage should the internal temperatures rise too high. When those temperatures are reached, the thermal switch disconnects power to the motor. If this happens, turn off the ~~unit~~, remove the ~~filter~~, and wait one hour for the thermal switch to reset. The outside of the unit may feel cool, but the internal motor temperature may still be high. In practice, if the motor turns off unexpectedly during use and cannot be activated by the touch screen or by an accessory, and everything on the touch screen still operates as normal, it is highly likely the unit has overheated. Items that can lead to overheating include:

- Running the ~~unit~~ continuously at maximum speed for an extended period
- Elevated mains voltage
- Unresolved occlusions
- Blocked or restricted exhaust
- Warm air environments

6.4 Fault Messages

Fault	Fault Title	Fault Description	User Action
Service Light Flashes White	Startup Self-Diagnostics Unsuccessful	Boot up fault	Restart ~~unit~~. If problem persists, return for service.
Service Light Flashes White	Internal Fault	Application Memory CAN Communication Failure. Operational Voltage/Frequency out of range. 400-hour motor life reached.	Restart ~~unit~~. If problem persists, return for service.
Filter Icon Flashes White	Depleted Filter	Empty Filter icon flashes white	Replace ~~filter~~
Occlusion Icon Flashes White	Occlusion Detected	Occlusion in the accessory has been detected	Remove the occlusion and restart the suction.

7.0 MAINTENANCE

7.1 General Maintenance Information

In order to guarantee the basic safety of the system, it is recommended that periodic inspection of the CONMED PlumeSafe® X5 SEU is performed.

Refer to the instructions for use provided with reusable accessories for cleaning instructions.

7.2 Equipment Cleaning

The exterior of the ~~smoke evacuation unit and filter~~ may be cleaned by wiping with a cloth that has been dampened (not dripping) with a mild detergent or mild disinfecting solution. The following cleaning agents can be used to clean the exterior of the unit and filter:

- Mild detergents, such as Windex® or Formula 409®
- 70% isopropyl alcohol
- 5% sodium hypochlorite (Clorox®)
- Quaternary ammonia solutions (Virex® Plus)
- CavaCide™

WARNING: Using abrasive cleaners, solvents, or other cleaning agents that are not on the suggested list can result in damage to the unit exterior and impair labeling/symbols.

WARNING: Spraying cleaning fluids directly on the unit can result in damage to the unit.

~~When using reusable accessories with the smoke evacuation unit and filter, refer to the instructions for use of the accessory to ensure proper handling prior to use. For example, some reusable accessories are non sterile upon receipt and require proper preparation per the accessory's instructions for use prior to use.~~

~~**WARNING:** Damaged accessories can result in injury to the user or patient.~~

7.3 Periodic Inspection

The CONMED PlumeSafe® X5 SEU should be inspected at least once every year (12 months) by a hospital-qualified biomedical technician. This inspection should include checks for:

- Damage to the power cord or plug.
- Tightness of the power plug within the ~~unit~~'s power cord receptacle.
- Obvious external damage to the ~~unit~~.
- Obstructions of the exhaust

7.3.1 ~~WARNING:~~ For Testing or Servicing

Refer all servicing to CONMED service personnel.

7.4 Transportation, Storage, and Shipment

Prior to shipment or storage, the ~~smoke evacuation unit~~ should be enclosed and sealed in a polyethylene bag and placed in its original carton using the original packaging materials.

7.5 Disposal

WARNING: Do not dispose of electrical appliances as unsorted municipal waste. Use separate collection facilities. Electrical appliances that are incorrectly disposed in dumps or landfills can leach dangerous substances causing contamination of soil and groundwater, and thereby damaging the environment. Contact your local government or point of sale for information regarding the collection of waste electrical appliances.

WARNING: At the end of the product's life, discard biologically contaminated devices in accordance with your institution's hazardous ~~was~~ procedures and local requirements. Components of the PlumeSafe® X5 Smoke Management System that are considered a bio-hazardous risk after use included the filter and tubing.

~~WEEE (Waste Electrical and Electronic Equipment) symbol.~~ This product must not be disposed of with household waste.

8.0 SPECIFICATIONS

8.1 Input Power

make a table like the one below. Same column for the SEU, add column for voltage (PX5-120 and PX5-120NF 100V-120V and for the other 4 220V-240V), frequency (50-60Hz) same for all), and mains current (10 A Max same for all)

Mains Voltage: 100-240 V, 50-60 Hz

Mains Current: 10 A Max.

8.2 Mains Internal

Over-current, slow blow fuses for protection:

Smoke Evacuation Unit	Fuse Description
PX5-120 PX5-120NF	FUSE CERAMIC 10A 250VAC 5X20 mm, Slow Blow
PX5-220 PX5-220NF	FUSE CERAMIC 5A 250VAC 5X20 mm, Slow Blow
PX5-220P1 PX5-220P1NF	FUSE CERAMIC 5A 250VAC 5X20 mm, Slow Blow

8.3 Mains Frequency Leakage

Designed to comply with leakage current requirements of IEC 60601-1: Edition 3.2.

8.4 Regulatory Compliance

Description	**Standard**
Medical Electrical Equipment – Basic Safety and Essential Performance (Class I)	IEC 60601-1:2005+AMD1:2012+AMD2:2020, Edition 3.2 ANSI/AAMI ES60601-1: A1:2012, C1:2009/(R)2012 and A2:2010/(R)2012 CAN/CSA-C22.2 NO. 60601-1:14
Usability	IEC 60601-1-6:2010+AMD1:2013+AMD2:2020 in conjunction with IEC62366:2007 and AMD1:2014
Medical Device Risk Assessment	ISO 14971(2019)
Quality Management Systems	ISO 13485 (2016)
Electromagnetic Disturbances to Medical Electrical Equipment and Systems	EN 60601-1-2:2015 +A1:2021, IEC 60601-1-2:2014 + A1:2020, IEC 60601-1-2:2014 + A1:2020, JIS T 0601-1-2:2012
Systems for Evacuation of Plume Generated by Medical Devices	ISO 16571 (2014)
Acoustics	ISO 3744:2010
Ingress Protection (Solids/Liquids)	EN 60529 (IP31)

8.5 Line Regulation

Power Change <1% for the range of line voltages specified.

8.6 Environmental Protection

The shipping container and packing material should be retained in the event the ~~smoke evacuation unit~~ must be returned for factory service. At the end of the equipment's life, the equipment may be a potential biohazard and should be disposed of in accordance with hospital or facility practice, and following local, state and national regulations.

Component materials:

1. Console: Aluminum and thermoplastic
2. Circuit Boards: Thermoset printed wiring boards and miscellaneous electronic components
3. Transformers: Ferrite and powdered iron magnetic cores, thermoplastics
4. Mains Cord: Thermoplastic and copper.
5. Shipping Container: Cardboard, urethane foam, and polyethylene film.

Refer to instructions for use provided with accessories for disposal instructions.

8.7 Power Cord

PX5-220, PX5-220NF, PX5-220P1, and PX5-220P1NF units are supplied with an IEC-60320 250 V, 10 A. PX5-120 and PX5-120NF units are supplied with an IEC-60320 125 V, 15 A mains inlet connector. Power cords can be ordered from CONMED.

8.8 System Dimensions and Weight

Smoke Evacuation Unit
Weight: 9.53 kg (21.0 lb)
Height: 18.80 cm (7.40 in)
Width: 35.56 cm (14.00 in)
Depth: 48.51 cm (19.10 in)

8.9 Touchscreen

The touchscreen of the CONMED PlumeSafe® X5 SEU includes:

- Active Area (Capacitive Touch): 12.39 cm (H) x 9.63 cm (W)

8.10 Electromagnetic Compatibility

The following are guidance and manufacturer's declarations regarding electromagnetic compatibility for the CONMED PlumeSafe® X5 SEU. The emissions characteristics of this equipment make it suitable for use in industrial areas and hospitals. In case of interference, the user might need to take mitigation measures, such as relocating or re-orienting the equipment and any connected cables and accessories to prevent adverse events due to interference to and from other equipment.

Table 8.1: Guidance and Manufacturer's Declaration — Electromagnetic Emissions. The CONMED PlumeSafe® X5 SEU is intended for use in the electromagnetic environment specified below. The customer or the end user of the generator should assure that it is used in such an environment.

Guidance and Manufacturer's Declaration - Electromagnetic Emissions		
The PlumeSafe® X5 Smoke Management System is intended for use in the electromagnetic environment specified below. The customer or user of the PlumeSafe® X5 Smoke Management System should assure that it is used in such an environment.		
Emissions Test	**Compliance**	**Electromagnetic Environment - Guidance**
RF Emissions CISPR 11	Group 1	The PlumeSafe® X5 Smoke Management System uses RF energy only for its internal function. Therefore, its RF emissions are very low and are not likely to cause any interference in nearby electronic equipment.
RF Emissions CISPR 11	Class A	The model PlumeSafe® X5 Smoke Management System is suitable for use in all establishments, other than domestic establishments and those directly connected to the public low-voltage power supply network that supplies buildings used for domestic purposes.
Harmonic Emissions IEC 61000-3-2	Class A	N/A
Voltage Fluctuations/ Flicker Emissions IEC 61000-3-3	Class A	N/A

Guidance and Manufacturer's Declaration - Electromagnetic Immunity			
The PlumeSafe® X5 Smoke Management System is intended for use in the electromagnetic environment specified below. The customer or user of the PlumeSafe® X5 Smoke Management System should assure that it is used in such an environment.			
Immunity Test	IEC 60601 Test Level	Compliance Level	Electromagnetic Environment - Guidance
Electromagnetic discharge (ESD) IEC 61000-4-2	+6 kV contact +8 kV air	+6 kV contact +8 kV air	Floors should be wood, concrete or ceramic tile. If floors are covered with synthetic material, the relative humidity should be at least 30%
Electrical fast transient/burst IEC 61000-4-4	+2 kV for power supply lines +1 kV for input/ output lines	+2 kV for power supply lines +1 kV for input/ output lines	Mains power quality should be that of a typical commercial or hospital environment.
Surge IEC 61000-4-5	+1 kV differential mode +2 kV common mode	+1 kV differential mode +2 kV common mode	Mains power quality should be that of a typical commercial or hospital environment
Voltage dips, short interruptions, and voltage variations on power supply input lines. IEC 61000-4-11	95 % dip in U_T) for 0.5 cycle 40 % U_T (60 % dip in U_T) for 5 cycles 70 % U_T (30 % dip in U_T)	95 % dip in U_T) for 0.5 cycle 40 % U_T (60 % dip in U_T) for 5 cycles 70 % U_T (30 % dip in U_T)	Mains power quality should be that of a typical commercial or hospital environment. If the user of the ~~Model~~ PlumeSafe® X5 Smoke Management System requires continued operation during power mains interruptions, it is recommended that the ~~Model~~ PlumeSafe® X5 Smoke ~~Evacuation~~ System be powered from an uninterruptible power supply or a battery.
	for 25 cycles 95 % dip in U_T) for 5 sec	for 25 cycles 95 % dip in U_T) for 5 sec	
Power frequency (50/60 Hz) magnetic field IEC 61000-4-8	3 A/m	3 A/m	Power frequency magnetic fields should be at levels characteristic of a typical location in a typical commercial or hospital environment.

Guidance and Manufacturer's Declaration - Electromagnetic Emissions			
The ~~PlumeSafe® X5 Smoke Management System~~ is intended for use in the electromagnetic environment specified below. The customer or user of the ~~PlumeSafe® X5 Smoke Management System~~ should assure that it is used in such an environment.			
Immunity Test	IEC 60601 Test Level	Compliance Level	Electromagnetic Environment - Guidance
Radiated RF IEC 61000-4-3 Conducted RF IEC 61000-4-6	3 V/m 80 MHz to 2.5 GHz 150 kHz to 80 MHz	 3 V/m 3 Vrms	Portable and mobile RF communications equipment should be used no closer to any part of the ~~PlumeSafe® X5 Smoke Management System~~ including cables, than the Recommended separation distance calculated from the equation applicable to the frequency of the transmitter d = 1.7 √P 80 MHz to 800 MHz d = 2.3 √P 800 MHz to 2.5 GHz d = [3.5/V1} √P Where P is the maximum output power rating of the transmitter in watts (W) according to the transmitter manufacturer and d is the recommended separation distance in meters (m). Field strengths from fixed RF transmitters, as determined by an electromagnetic site survey, should be less than the compliance level in each frequency range. Interference may occur in the vicinity of equipment marked with the following symbol:
NOTE: At 80 MHz and 800 MHz, the higher frequency range applies. **NOTE:** These guidelines may not apply in all situations. Electromagnetic propagation is affected by absorption and reflection from structures, objects, and people.			
Field strengths from fixed transmitters, such as base stations for radio (cellular/cordless) telephones and land mobile radios, amateur radio, AM and FM radio broadcast and TV broadcast cannot be predicted theoretically with accuracy. To assess the electromagnetic environment due to fixed RF transmitters, an electromagnetic site survey should be considered. If the measured field strength in the location in which the ~~PlumeSafe® X5 Smoke Management System~~ is used exceeds the applicable RF compliance level above, the ~~PlumeSafe® X5 Smoke Management System~~ should be observed to verify normal operation. If abnormal performance is observed, additional measures may be necessary, such as reorienting or relocating the ~~model PlumeSafe® X5 Smoke Management System~~. Over the frequency range 150 kHz to 80 MHz, field strengths should be less than 3 V/m.			

Recommended Separation Distance Between Portable and Mobile RF Communications Equipment and the Model @ 3 Vrms			
The ~~PlumeSafe® X5 Smoke Management System~~ is intended for use in the electromagnetic environment in which radiated RF disturbances are controlled. The customer or the user of the ~~PlumeSafe® X5 Smoke Management System~~ can help prevent electromagnetic interference by maintaining a minimum distance between portable and mobile RF communications equipment (transmitters) and the unit as recommended below, according to the maximum output power of the communications equipment.			
Rated maximum output power of transmitter W	Separation distance according to frequency of transmitter m		
	150 kHz to 80 MHz $d = \left[\frac{3.5}{v_1}\right]\sqrt{P}$	80 kHz to 800 MHz $d = \left[\frac{3.5}{v_1}\right]\sqrt{P}$	800 kHz to 2.5 GHz $d = \left[\frac{3.5}{v_1}\right]\sqrt{P}$
0.01	0.12	0.12	0.23
0.1	0.34	0.34	0.74
1	1.7	1.7	2.3
10	3.7	3.7	7.4
100	11.7	11.7	23.3
For transmitters rated at a maximum output power not listed above, the recommended separation distance (D) in meters (M) can be estimated using the equation applicable to the frequency of the transmitter, where (P) is the maximum output rating of the transmitter in watts (W) according to the transmitter manufacturer.			
NOTE: At 80 MHz and 800 MHz, the higher frequency range applies. **NOTE:** These guidelines may not apply in all situations. Electromagnetic propagation is affected by absorption and reflection from structures, objects, and people.			

8.11 Radio Frequency Identificaiton

The RFID module is located on the RF circuit board. The intended purpose the RFID module is to ensure the correct RFID tagged filter is used and monitor filter life.

Table 8.2: RFID Information

Frequency range:	13.56 MHz
Type of antenna:	Integral loop antenna
Modulation:	Amplitude-shift Keying (ASK)
Mode of operation (simplex or duplex):	Duplex

8.11.1 FCC Compatibility

This device complies with part 15 of the FCC Rules. Operation is subject to the following two conditions:

- This device may not cause harmful interference; and
- This device must accept any interference received, including interference that may cause undesired operation.

Changes or modifications to this equipment not expressly approved by the manufacturer may void the user's authority to operate this equipment.

FCC ID: 2AYVQ-P000023166

8.11.2 Industry Canada Statement

~~This device complies with Innovation, Science and Economic Development Canada's license exempt RSS(s). Operation is subject to the following two conditions:~~

- ~~This device may not cause interference.~~
- ~~This device must accept any interference, including interference that may cause undesired operation of the device.~~

IC ID: 26967-P000023166

HVIN: P000023166

~~8.11.3 RF Exposure Statement~~

~~This device meets the requirements for RF exposure when operated at a minimum distance of 20 cm from the user or nearby persons.~~

8.11.4 European Conformity (~~PX5 220 and PX5 220P1~~ units only)

This product operates at 13.56 MHz with an H-field strength of <42 dBµA/m at 10 meters.

This device contains licence-exempt transmitter(s)/receiver(s) that comply with Innovation, Science and Economic Development Canada's licence-exempt RSS(s). Operation is subject to the following two conditions: (1) this device may not cause interference, and (2) this device must accept any interference, including interference that may cause undesired operation of the device.

Cet appareil contient un ou des émetteurs/récepteurs exempts de licence conformes aux RSS exempts de licence d'Innovation, Sciences et Développement économique Canada. Son fonctionnement est soumis aux deux conditions suivantes : (1) cet appareil ne doit pas causer d'interférences et (2) cet appareil doit accepter toute interférence, y compris les interférences susceptibles de provoquer un fonctionnement indésirable de l'appareil.

9.0 OUTPUT CHARACTERISTICS

This section contains the CONMED PlumeSafe® X5 SEU output characteristics.

9.1 Output Characteristics

9.1.1 Flow, Capture, Sound

Output for PX5-120, PX5-120NF, PX5-220, PX5-220NF Units	
Description	**Value**
Max Flow with 7/8 in (22 mm) x 6 ft (1.8 m) Tubing*	TBD
Max flow with PlumePen® Elite 3/8 in (9.5 mm) x 10 ft (3 m) with 7/8″ Adaptor	TBD
Max flow with PlumePen® Ultra 3/8 in (9.5 mm) x 10 ft (3 m) with 7/8″ Adaptor	TBD
Max flow with PlumePen® Pro 3/8 in (9.5 mm) x 10 ft (3 m) with 7/8″ Adaptor	TBD
Max flow with PlumePort® SEO 3/8 in (9.5 mm) x 10 ft (3 m) with 7/8″ Adaptor	0.42 SCFM (12 SLPM)
~~Particulate Capture Efficiency~~	~~99.9995% (ULPA)~~
~~Volatile Organic Compound Capture Efficiency (See for compounds)~~	~~90%+~~
Max Noise Level @ 1 m from the surface of the unit.	<60 dBA

*Values at sea level

Output for PX5-220P1 and PX5-220P1NF Sealed Units	
Description	**Value**
Max Flow with 7/8 in (22 mm) x 6 ft (1.8 m) Tubing*	TBD
Max flow with PlumePen® Elite 3/8 in (9.5 mm) x 10 ft (3 m) with 7/8″ Adaptor	TBD
Max flow with PlumePen® Ultra 3/8 in (9.5 mm) x 10 ft (3 m) with 7/8″ Adaptor	TBD
Max flow with PlumePen® Pro 3/8 in (9.5 mm) x 10 ft (3 m) with 7/8″ Adaptor	TBD
Max flow with PlumePort® SEO 3/8 in (9.5 mm) x 10 ft (3 m) with 7/8″ Adaptor	0.42 SCFM (12 SLPM)
~~Particulate Capture Efficiency~~	~~99.9995% (ULPA)~~
~~Volatile Organic Compound Capture Efficiency (See **1.1 Introduction** for compounds)~~	~~90%+~~
Max Noise Level @ 1 m from the surface of the unit.	<60 dBA

*Values at sea level

9.1.2 Filter Life

Illuminated Filter Life Indicators	Filter Life Remaining		
	Open Tubing Mode	Electrosurgical/Diathermy Pencil Mode	Laparoscopic Mode
All	15.75 to 18 hours	21.88 to 25 hours	30.625 to 35 hours
7	13.5 to 15.75 hours	18.76 to 21.88 hours	26.25 to 30.625 hours
6	11.25 to 13.5 hours	15.63 to 18.76 hours	21.875 to 26.25 hours
5	9 to 11.25 hour	12.51 to 15.63 hours	17.5 to 21.875 hours
4	6.75 to 9 hours	9.38 to 12.51 hours	13.125 to 17.5 hours
3	4.5 to 6.75 hours	6.26 to 9.38 hours	8.75 to 13.125 hours
2	2.25 to 4.5 hours	3.13 to 6.26 hours	4.375 to 8.75 hours
1	Up to 2.25 hours	Up to 3.13 hours	Up to 4.375 hours

10.0 SOFTWARE LICENSE AGREEMENT

END USER LICENSE AGREEMENT

Terms and Conditions

IMPORTANT: PLEASE READ THE TERMS AND CONDITIONS OF THIS SOFTWARE END USER LICENSE AGREEMENT ("EULA" OR "AGREEMENT") CAREFULLY BEFORE USING OR ACCESSING ANY PORTION OF THE SOFTWARE. BY USING OR ACCESSING THE SOFTWARE, YOU HEREBY ACKNOWLEDGE THAT YOU HAVE CAREFULLY READ AND UNDERSTOOD THE TERMS OF THIS AGREEMENT, THAT YOU HAVE THE RIGHT, POWER AND AUTHORITY TO ENTER INTO THIS AGREEMENT AND YOU ACCEPT THIS AGREEMENT AND AGREE THAT YOU ARE LEGALLY BOUND BY ITS TERMS. IF YOU DO NOT ACCEPT THE TERMS OF THIS AGREEMENT, CONMED WILL NOT AND DOES NOT LICENSE THE SOFTWARE TO YOU AND YOU MUST NOT ACCESS NOR USE THE SOFTWARE. YOU SHALL BE LIABLE FOR ANY FAILURE TO COMPLY WITH THE TERMS OF THIS AGREEMENT AND THIS AGREEMENT IS ENFORCEABLE AGAINST ANY PERSON OR ENTITY THAT ACCESSES OR USES THE SOFTWARE. "YOU" OR "YOUR" OR "CUSTOMER" MEANS THE NATURAL PERSON OR THE ENTITY THAT IS AN AUTHORIZED PURCHASER AND/OR END USER OF THE PRODUCTS AGREEING TO BE BOUND BY THIS AGREEMENT.

This Agreement between You and CONMED Corporation ("CONMED" or the "Company") governs Your use of the Software as installed on the Products (as described and defined in this manual) including any and all related documentation ("Documentation") upgrades, patches, modified versions, updates, and additional features and functionality to the Software, if any, provided to Customer by CONMED ("Updates"), and any optional add-on module or packages ("Add-Ons") (collectively, the "Software"); however the availability of some new features, functionality, and Add-Ons may require You to agree to supplemental terms and pay additional fees. In exchange for valuable consideration agreed to by CONMED and You, You are provided with the license rights set forth herein. For the avoidance of any doubt, the Software is licensed, not sold, to You. This Agreement can be superseded by an express written agreement between the CONMED and You. If Customer has any questions concerning the permitted uses of the Software, Customer should contact CONMED for clarification.

1. **License Grant**. Subject to the terms of this Agreement and the payment of all license fees or other consideration required to access and use the Software, CONMED grants You a limited, non-exclusive, non-sublicensable, nontransferable, revocable license to access and use a single copy of the Software on the Product(s) strictly in accordance with the Software's Documentation and this Agreement, and for so long as this Agreement is in effect.
2. **License Restrictions**. Except to the extent that any enumerated restriction is prohibited by applicable law, Customer shall not and shall not cause a third party to: (a) access or use the Software beyond the scope of the license granted under Section 1; (b) provide any other person, including any subcontractor, independent contractor, affiliate, or service provider with access to or use of the Software; (c) copy the Software, in whole or in part, except as expressly permitted by this license; (d) modify, translate, adapt or otherwise create derivative works or improvements, whether or not patentable, of the Software; (e) reverse engineer, disassemble, decompile, decode or otherwise attempt to derive or gain access to the source code of the Software or any part thereof; (f) remove, delete, alter or obscure any titles, trademarks, service marks, trade names, legends, watermarks or any copyright, trademark, patent or other intellectual property or proprietary rights notices from the Software, including any copy thereof; (g) rent, lease, lend, sell, sublicense, assign, distribute, publish, transfer or otherwise make available the Software, or any features or functionality of the Software, to any third party for any reason, whether or not over a network or on a hosted basis, including in connection with the internet or any web hosting, wide area network (WAN), virtual private network (VPN), virtualization, time-sharing, service bureau, software as a service, cloud or other technology or service; (h) unbundle, break apart, or repackage the Software or any of its component parts for any reason whatsoever; (i) provide access to or use of the Software to a third party, including but not limited to providing an evaluation license to the Software to any other person or entity, or otherwise permitting any other person or entity to evaluate the Software; (j) remove, disable, circumvent or otherwise create or implement any workaround to any copy protection, rights management or security features in or protecting the Software; (k) access or use the Software for the development of a competing software product or service or any other purpose that is to CONMED's commercial disadvantage; or (l) engage in activities when using the Software that (i) violate the law, regulation, rule, court verdicts, resolutions or orders, or administrative measures that are legally binding, (ii) may hinder public order or customs, (iii) infringe intellectual property rights, such as copyrights, trademarks and patents, fame, privacy, and all other rights of CONMED and/or a third party granted by the law or contract, (iv) lead to the misrepresentation of CONMED and/or a third party, or intentionally spread false information, (v) interfere with CONMED's servers and/or network systems either related or unrelated to the Software, or engage in such activities that abuse the Software and/or servers and/or network systems, either related or unrelated to the Software, by means of BOTs, cheat tools, or other technical measures, (vi) exchange the right to use the Software into cash, property or other economic benefits without CONMED's authorization, (vii) use the Software for sales, marketing, advertisement, soliciting or other commercial purposes (except for those approved by CONMED), or (vii) other activities that may be deemed by CONMED to be inappropriate. CONMED shall have the sole and exclusive right to determine whether Customer has engaged in any of these restricted activities and to determine whether this Agreement with Customer should be terminated. To the extent that Customer is expressly permitted by applicable mandatory law to undertake any of the activities listed in this paragraph,

Customer will not exercise those rights unless and until Customer has given CONMED not less than 30 days' prior written notice of Customer's intent to exercise any such rights unless an order of a government agency of competent jurisdiction will not so allow. This License will terminate immediately upon notice from CONMED if Customer fails to comply with any provision of this License or any agreement.

3. **Proprietary Rights and Reservation of Rights**. Customer hereby acknowledges and agrees that: (a) the Software is the exclusive proprietary technology and materials of CONMED (and/or CONMED's third party licensors, as may be appropriate) and is protected by patent laws, copyright laws and international treaties as well as other intellectual property laws; (b) CONMED (and/or CONMED's third party licensors, as may be appropriate) shall retain all ownership rights in and to the Software and any and all patents, copyrights, trade secrets and other proprietary rights relating thereto; (c) the Software is provided under license, and not sold, to Customer; (d) Customer has no right, title, or interest in the Software under this Agreement, or any other rights thereto other than to access and use the Software in accordance with the license granted in Section 1 above, and subject to all terms, conditions and restrictions, under this Agreement; (e) CONMED (and/or CONMED's third party licensors, as may be appropriate) reserves and shall retain all rights not expressly granted to Customer including CONMED's entire right, title, and interest in and to the Software, copies of the Software, and in all related copyrights, trade secrets, patents, trademarks, service marks, domain names and any other intellectual property and proprietary rights therein or relating thereto, including but not limited to any registrations, applications, renewals, and extensions of such rights, except as expressly granted to Customer in this Agreement; (f) any unauthorized copies, modifications, translations, adaptations, derivative works, or improvements of the Software or components thereof shall be exclusively owned by CONMED, and Customer (i) agrees to assign and hereby assigns any and all rights, title, and interests in the foregoing to CONMED, (ii) will promptly sign any other documents necessary to perfect CONMED's rights in and to the foregoing, and (iii) expressly waive any rights Customer may obtain inconsistent with the foregoing through application of law or otherwise; (g) Customer shall safeguard the Software (including all copies thereof) from misappropriation, theft, misuse, unauthorized access and unauthorized use and Customer shall promptly notify CONMED if Customer become aware of any such misappropriation, theft, misuse, unauthorized access or unauthorized use and fully cooperate with CONMED, at CONMED's sole expense, in any legal action taken by CONMED to enforce its rights in and to the Software; (h) Customer hereby covenants that it will not assert any claim that the Software, components thereof, modifications or derivative works thereof created by or for CONMED infringe any intellectual property right owned or controlled by Customer. This Section shall survive the expiration or termination of this Agreement.
4. **Export Regulation and Geographic Restrictions**. The Software may be subject to U.S. export control laws, including the U.S. Export Administration Act and its associated regulations. You shall not, directly or indirectly, export, re-export or release the Software to, or make the Software accessible from, any jurisdiction or country to which export, re-export or release is prohibited by law, rule or regulation. You shall comply with all applicable federal laws, regulations and rules, and complete all required undertakings (including obtaining any necessary export license or other governmental approval), prior to exporting, re-exporting, releasing or otherwise making the Software available outside the U.S. You acknowledge that You may not be able to access all or some of the Software's content and services outside of the U.S. and that access thereto may not be legal by certain persons or in certain countries. If You access the Software's content and services from outside the U.S., You are responsible for compliance with local laws.
5. **Updates**. You agree that CONMED has no obligation to provide Software updates, which may include upgrades, bug fixes, patches, enhancements and other error corrections and/or new features, maintenance, technical or other support for the Software (collectively, including related documentation, "Updates"), or to continue to provide or enable any particular features or functionality. CONMED may from time to time, however, in its sole discretion, develop and make Updates available to You. Updates may also modify or delete in their entirety certain features and functionality. You further acknowledge and agree that the Products, Software or portions thereof may not properly operate should You fail to have such Updates installed, and that all Updates will be deemed part of the Software and be subject to all terms and conditions of this Agreement.
6. **Third Party Materials**. The Software may include software, content, data or other materials, including related documentation, that are owned by persons or entities other than CONMED and that are provided to Customer on terms/ obligations that are different from those contained in this Agreement ("Third-Party Licenses"). Customer hereby agrees to comply with any applicable Third-Party Licenses. You agree that CONMED does not assume and will not have any liability or responsibility to You or any other person or entity for any materials licensed under Third-Party Licenses.
7. **Confidentiality**. Customer hereby acknowledges and agrees: (a) that the Software and contains proprietary and confidential information of CONMED, including the code of the Software, and that any disclosure by Customer of CONMED's confidential information will cause immediate, irreparable harm to CONMED for which no adequate remedy at law exists, and for which equitable remedies, as well as any other available legal remedies, may be awarded by a court of competent jurisdiction; (b) to maintain the confidentiality of the Software and other confidential information of CONMED using at least as great a degree of care as Customer uses to maintain the confidentiality of Customer's own confidential information and in no case less than reasonably prudent care; and (c) to limit access to the Software to those persons employed by Customer and/or who are under Customer's direction who need to use the Software for purposes permitted hereunder and who have been clearly informed of their obligation and agree to maintain the confidentiality of the Software and to comply with such terms and conditions.

8. **Enforcement**. Customer hereby agrees that any use of the Software beyond the scope of this Agreement or other violation of the intellectual property rights of CONMED, shall constitute an infringement and that CONMED shall be entitled to seek preliminary and permanent injunctive relief enjoining and restraining further use of the Software or violation of CONMED rights without the requirement that CONMED post a bond.
9. **Term and Termination**. The term of this Agreement commences when You access and/or use the Software and will continue in effect for the commercial life of the Products, unless sooner terminated by You or CONMED as set forth in this Section.
   a. You may terminate this Agreement by 30 days written notice to CONMED and by returning the Products with the subject Software thereon to CONMED.
   b. CONMED may terminate this Agreement at any time and for any reason in its sole discretion by 30 days written notice to You. In addition, this Agreement will terminate immediately and automatically without any notice if You violate any of the terms and conditions of this Agreement or if there is a safety recall of the Product or Software.
   c. Upon termination:
      i. all rights granted to You under this Agreement will terminate; and
      ii. You must cease all use of the Software.
   d. Termination will not limit any of CONMED's rights or remedies at law or in equity.
   e. You agree that upon termination of this Agreement, You will have no right or ability to receive or retrieve from CONMED or the Software any personal or other information inputted and/or stored with or using the Software.
10. **DISCLAIMERS:** IF YOU CHOOSE OR ARE PROVIDED WITH A USER NAME, PASSWORD, OR ANY OTHER PIECE OF INFORMATION AS PART OF A SECURITY PROCEDURE AS PART OF YOUR USE OF THE SOFTWARE, YOU ARE SOLELY RESPONSIBLE FOR MAINTAINING THE CONFIDENTIALITY OF YOUR PASSWORD AND ACCOUNT AND FOR ANY AND ALL STATEMENTS MADE AND ACTS OR OMISSIONS THAT OCCUR THROUGH THE USE OF YOUR PASSWORD AND ACCOUNT, INCLUDING ANY MAIL SENT AND ANY CHARGES INCURRED. THEREFORE, YOU MUST TAKE STEPS TO ENSURE THAT OTHERS DO NOT GAIN ACCESS TO YOUR PASSWORD AND ACCOUNT. YOU ALSO ACKNOWLEDGE THAT YOUR ACCOUNT IS PERSONAL TO YOU AND AGREE NOT TO PROVIDE ANY OTHER PERSON WITH ACCESS TO THE SOFTWARE. YOU AGREE TO NOTIFY US IMMEDIATELY OF ANY UNAUTHORIZED ACCESS TO OR USE OF YOUR USERNAME OR PASSWORD OR ANY OTHER BREACH OF SECURITY.
11. **DISCLAIMER OF WARRANTIES**.
   a. CONMED warrants that, upon the date of delivery, the Software is free from defects in material and workmanship and will, upon delivery, perform substantially in accordance with the operating documentation for the Software that is current on the date of installation. Your sole remedy for breach of the foregoing warranty shall be to contact CONMED for replacement of the Software within ten (10) business days of your receipt thereof. CONMED EXPRESSLY DISCLAIMS ALL OTHER WARRANTIES, WHETHER EXPRESS, IMPLIED, STATUTORY OR OTHERWISE, WITH RESPECT TO THE SOFTWARE, INCLUDING ALL IMPLIED WARRANTIES OF MERCHANTABILITY, FITNESS FOR A PARTICULAR PURPOSE, TITLE AND NON.INFRINGEMENT, AND WARRANTIES THAT MAY ARISE OUT OF COURSE OF DEALING, COURSE OF PERFORMANCE, USAGE OR TRADE PRACTICE. WITHOUT LIMITATION TO THE FOREGOING, CONMED PROVIDES NO WARRANTY OR UNDERTAKING, AND MAKES NO REPRESENTATION OF ANY KIND THAT THE SOFTWARE WILL MEET CUSTOMER REQUIREMENTS, ACHIEVE ANY INTENDED RESULTS, BE COMPATIBLE OR WORK WITH ANY OTHER SOFTWARE, APPLICATIONS, SYSTEMS OR SERVICES, OPERATE WITHOUT INTERRUPTION, MEET ANY PERFORMANCE OR RELIABILITY STANDARDS OR BE ERROR FREE OR THAT ANY ERRORS OR DEFECTS CAN OR WILL BE CORRECTED. SOME JURISDICTIONS DO NOT ALLOW THE EXCLUSION OF OR LIMITATIONS ON IMPLIED WARRANTIES OR THE LIMITATIONS ON THE APPLICABLE STATUTORY RIGHTS OF A CONSUMER, SO SOME OR ALL OF THE ABOVE EXCLUSIONS AND LIMITATIONS MAY NOT APPLY TO YOU.
   b. THE SOFTWARE MAY BE SUBJECT TO LIMITATIONS, DELAYS, AND OTHER PROBLEMS INHERENT IN THE USE OF THE INTERNET AND ELECTRONIC COMMUNICATIONS. CONMED IS NOT RESPONSIBLE FOR ANY DELAYS OR OTHER DAMAGES RESULTING FROM SUCH PROBLEMS. YOU SHALL BE SOLELY RESPONSIBLE FOR ANY DAMAGE TO YOUR SYSTEMS OR LOSS OF DATA THAT RESULTS FROM USE OF THE SOFTWARE OR CONMED'S SERVICES OR ANY THIRD- PARTY OFFERINGS.
12. **Limitation of Liability**. TO THE FULLEST EXTENT PERMITTED BY APPLICABLE LAW, IN NO EVENT WILL CONMED OR ITS AFFILIATES, OR ANY OF ITS OR THEIR RESPECTIVE LICENSORS OR SERVICE PROVIDERS, HAVE ANY LIABILITY UNDER THIS AGREEMENNT ARISING FROM OR RELATED: (a) PERSONAL INJURY, PROPERTY DAMAGE, LOST PROFITS, COST OF SUBSTITUTE GOODS OR SERVICES, LOSS OF DATA, LOSS OF GOODWILL, BUSINESS INTERRUPTION, COMPUTER FAILURE OR MALFUNCTION OR ANY OTHER CONSEQUENTIAL, INCIDENTAL, INDIRECT, EXEMPLARY, SPECIAL OR PUNITIVE DAMAGES; (b) DIRECT DAMAGES IN AMOUNTS THAT IN THE AGGREGATE EXCEED THE AMOUNT ACTUALLY PAID BY FOR THE SOFTWARE. THE FOREGOING LIMITATIONS WILL APPLY WHETHER SUCH DAMAGES ARISE OUT OF BREACH OF CONTRACT, TORT (INCLUDING NEGLIGENCE) OR OTHERWISE AND REGARDLESS OF WHETHER SUCH DAMAGES WERE FORESEEABLE OR CONMED WAS ADVISED OF THE POSSIBILITY OF SUCH DAMAGES. SOME JURISDICTIONS DO NOT ALLOW CERTAIN LIMITATIONS OF LIABILITY SO SOME OR ALL OF THE ABOVE LIMITATIONS OF LIABILITY MAY NOT APPLY TO CUSTOMER.

13. **Indemnification**. Customer agrees to defend, indemnify and hold CONMED and its employees, officers, directors, representatives, licensors, referrers, and agents harmless against any and all losses, liabilities, awards, and costs (including legal fees and expenses) arising out of or related to third-party claims which result from (i) any breach of this Agreement by Customer; (ii) any misuse by Customer, its employees, customers or its agents' and/ or subcontractors of the Software or products and services provided by CONMED, (iii) any infiltration, intrusion, hack, breach, or violation of any systems maintained by Customer or any third party vendor, agents, contractors, or processor utilized by Customer, (iv) any failure of Customer or any third party vendor, contractor, agent, or processor utilized by Customer to fix a security breach or implement any security procedures or take reasonable corrective actions; (vi) the sale or use of any goods or services sold and provided by Customer, (vii) the use of any other third-party, system, network, software and/or hardware, (viii) Customer's violation of any third-party right, including without limitation, any intellectual property right, publicity, confidentiality, property or privacy right; and/or (d) Customer's violation of any laws, rules, regulations, codes, statutes, ordinances or orders of any governmental and quasi-governmental authorities, including, without limitation, all regulatory, administrative and legislative authorities. You will cooperate as fully required by CONMED in the defense of any claim. CONMED reserves the right to assume the exclusive defense and control of any matter subject to indemnification by You, and You will not in any event settle any claim without the prior written consent of CONMED. This Section shall survive the expiration or termination of this Agreement.
14. **Customer Responsibilities**. Customer is responsible for the supervision, management, and control of its use of the Software, including, but not limited to: (a) assuring proper configuration of the hardware, related equipment, and devices; and compatibility with the Software; (b) establishing adequate operating methods; and (c) implementing procedures sufficient to satisfy its obligations for security under this EULA, including appropriate control of its employees to prevent misuse, unauthorized copying, modification, or disclosure of the Software. Customer is responsible for maintaining the security of the Software, including applying and rigorously following best practices with respect to password selection and security, limiting the number of users with access to the Software, and properly assigning access specified roles to those users who require such access. CONMED retains the right to access the Software to manage the system parameters or provide support.
15. **Entire Agreement**. This Agreement constitutes the entire agreement between the parties with respect to the Software (as defined herein), sets forth CONMED's entire liability and Customer's exclusive remedy with respect to the Software, and supersedes the terms of any purchase orders and any other communications or advertising with respect to the Software. Customer acknowledges that this Agreement is a complete statement of the agreement between Customer and CONMED with respect to the Software, and that there are no other prior or contemporaneous understandings, promises, representations, or descriptions with respect to the Software.
16. **Headings**. Headings under this Agreement are intended only for convenience and shall not affect the interpretation of this Agreement.
17. **Waiver and Modification**. No failure of either party to exercise or enforce any of its rights under this Agreement will act as a waiver of those rights. This Agreement may only be modified, or any rights under it waived, by a written document executed by the party against which it is asserted.
18. **Assignment**. Customer may not assign this Agreement or any right under or interest in this Agreement or delegate any obligations under this Agreement without the prior written approval of CONMED. Any attempted or purported assignment or delegation by CONMED in violation of the preceding is void.
19. **Severability**. If any provision of this Agreement is found illegal or unenforceable, it will be enforced to the maximum extent permissible, and the legality and enforceability of the other provisions of this Agreement will not be affected.
20. **Independent Contractors**. This Agreement shall not be construed to create any employment, partnership, joint venture, franchise or agency relationship between You and CONMED or to authorize either party to enter into any commitment or agreement binding on the other party.
21. **Representations**. You represent and warrant that You are authorized to enter into this Agreement and comply with its terms. Furthermore, You represent and warrant that You will at any and all times meet Your obligations hereunder, as well as comply with any and all laws, regulations and policies that may apply to the use of the Software.
22. **Force Majeure**. CONMED will not be responsible or liable to You, or deemed in default or breach hereunder by reason of any failure or delay in the performance of its obligations hereunder where such failure or delay is due to pandemics, strikes, labor disputes, civil disturbances, riot, rebellion, invasion, epidemic, hostilities, war, terrorist attack, embargo, natural disaster, acts of nature, flood, fire, sabotage, fluctuations or non-availability of electrical power, heat, light, air conditioning or Your equipment, loss and destruction of property or any other circumstances or causes beyond CONMED's reasonable control.
23. **No Presumptions**. If an ambiguity or question of intent arises with respect to any provision of this Agreement, this Agreement will be construed as if drafted jointly by the parties and the parties agree that any principle of construction or rule of law that provides that, in the event of any inconsistency or ambiguity, an agreement shall be construed against the drafter of the agreement shall have no application to the terms and conditions of this Agreement. Furthermore, no presumption or burden of proof will arise favoring or disfavoring either party by virtue of authorship of any of the provisions of this Agreement.

24. **Governing Law**. This Agreement will be governed by Delaware law, without regard to its choice of law principles, and Customer and CONMED hereby agree to submit to the exclusive jurisdiction of the Delaware Court of Chancery in New Castle County, or in the event (but only in the event) that such court does not have subject matter jurisdiction over such action, the United States District Court for the District of Delaware, and each of the parties hereto hereby irrevocably submits to the jurisdiction of such courts for the purpose of any such suit, action or other proceeding.
25. **Notices**. All notices and other communications required or permitted hereunder shall be in writing and shall be deemed to have been given: (a) when delivered by hand (with written confirmation of receipt); (b) when received by the addressee if sent by a nationally recognized overnight courier (receipt requested); (c) on the date sent by facsimile or e-mail of a PDF document (with confirmation of transmission) if sent during normal business hours of the recipient, and on the next business day if sent after normal business hours of the recipient; or (d) on the third day after the date mailed, if sent by certified or registered mail, return receipt requested, postage prepaid. Such communications must be sent to CONMED at CONMED Corporation, 525 French Road, Utica, New York 13502, U.S.A., attention General Counsel and to Customer at the address provided at the time of receipt of the Products with the Software (or to such other address as may be designated by a party from time to time in accordance with this Section 25).
26. **Survival.** The provisions of this Agreement that by their nature are intended to survive the termination of this Agreement shall survive the termination of this Agreement, including, without limitation, Sections 2, 3, 7, 8, 9, 11-14, 24 and 26.

EC REP
MDSS GmbH
Schiffgraben 41
D-30175 Hannover,
Germany

UKRP
CONMED UK Ltd
73/74 Shrivenham
Hundred Business Park
Swindon SN6 8TY
United Kingdom

CONMED Corporation
525 French Road
Utica, NY 13502-5994 USA
US: 1-866-4CONMED (426-6633) (US) or
CustomerExperience@conmed.com
International: +1 727-219-3310 or
InternationalCustomerExperience@conmed.com
www.conmed.com

MD

Rx ONLY

http://eifu.conmed.com

NON STERILE

PX5-SMS-EN **Rev. A** **05/2023**