MAVO EDGE 8K
OPERATION MANUAL

For KineOS 7.0

MAVO Edge 8K BRIEF INTRODUCTION

Kinefinity Inc. has been developing cinema cameras covering optical design to FPGA, circuits and software, with assistance from filmmakers, broadcasting industry and academic schools.

MAVO Edge 8K is a brand-new large-format 8K cine camera. With a whole-new carbon fiber camera body, MAVO Edge 8K is equipped with a stunning 8K 70P CMOS imaging sensor and cutting-edge image processing engine, which elevate the Kinefinity camera system to a whole new level. 8K wide up to 70fps, 6K wide up to 92fps and 4K wide up to 145fps can realize smooth post-production by direct recording with ProRes.

- Full frame 3:2 8K CMOS imaging sensor;
- **Dual native ISO:** 640/2560, low noise level and high latitude image at both settings;
- **ProRes:** In-camera ProRes recording at full resolution, in-camera oversampling 4K;
- **High frame rate:** Up to 92fps@6K Wide, up to 145fps@4K Wide;
- **Low rolling effect:** Fast CMOS imaging sensor readout speed, barely suffer any rolling shutter effect;
- **14+ stops with KineLOG3:** Preserve highlight and shadow perfectly, provide maximum room in post production;
- **KineMAG Nano:** Fully optimized NVMe-based M.2 SSD;
- **Custom LUT:** Support third-party 3D LUT in both shooting and post production;
- **KineMOUNT** (Interchangeable mounting system): Support PL/EF/Sony E/ARRI LPL Mount;
- **Video outputs:** Video port x2, 3G SDI port x2.

MAVO Edge 8K keeps the very compact and modular body and is compatible with some TERRA/MAVO accessories such as KineMON-5U/7U, KineEVF and mounting adapters. Thanks to the advanced image process platform and low consumption design, the highly integrated camera is suitable for both one-man job and film crew. Besides, Apple ProRes codecs enable fluent post workflow. With professional ports, MAVO Edge 8K is a powerful cinema camera that offers amazing footage while supporting an effective post workflow.

©2021 Kinefinity Inc.

FOR YOUR SAFETY

Before use, please read all instructions in this manual carefully:

- Pay attention to the **CAUTION** and **NOTICE**;
- Avoid near water use in case of water droplets splashing on the camera;
- Protect the camera from severe vibration;
- Avoid using the camera under direct sunlight; the operating temperature should be from 0 ℃ to 40℃;
- Protect the camera from strong magnetic field, dirt, moisture, or lightning storm environments;
- Avoid condensation during transportation or transition;
- Never block the air intake/vent, or the camera will be damaged for the overheat ;
- Avoid exposing the LCD/OLED screen to harsh direct sunlight, and squeezing or hiting the monitor ;
- Only use accessories recommended by Kinefinity.

While using the camera, please:

- Turn off the camera when attaching or detaching a Lens Mount;
- Avoid touching the OLPF when attaching or detaching a lens mount, as the optical element is fragile;
- Make sure the EF lens is aligned pogo-pin contact inside of the EF mount;
- Hold the lens while detaching it from the lens mount, to prevent it from accident.

©2021 Kinefinity Inc.

Contents

MAVO Edge 8K BRIEF INTRODUCTION 2

FOR YOUR SAFETY 3

1. CAMERA OVERVIEW 6

1.1 Interfaces and Buttons 6

1.2 Functions of Buttons 8

1.3 Interface and Parameters 9

1.4 Default Settings 10

2. QUICK GUIDE 11

2.1 Power Supply 11

2.2 Mount 13

2.3 Lens 14

2.4 Monitoring 15

2.5 Recording Media SSD 19

2.5.1 Introducing KineMAG Nano 19

2.5.2 The Use of KineMAG Nano 20

2.6 Audio 21

2.7 e-ND 22

2.8 Playback 23

2.9 Codec 24

2.10 Downscaling and Cropping Mode 25

2.11 Access clips on PC/MAC 26

3. SETTINGS AND ADVANCED OPERATIONS 27

3.1 Footage and Slate 27

3.2 Exposure and White Balance 28

3.2.1 Color Temperature List 28

3.2.2 Auto White Balance 28

3.2.3 Waveforms 29

3.2.4 Zebra Pattern 29

3.2.5 Digital Horizon 30

3.3 Slow-Mo and Quick-Mo 30

3.3.1 Two Types of FPS 30

3.3.2 User-defined CMOS Imaging Sensor FPS 30

©2021 Kinefinity Inc.

3.4 Custom LUT **32**
3.4.1 Upload Custom LUT 32
3.4.2 Erase Custom LUT 32
3.5 Firmware Update **33**
3.6 Calibration Mode **34**
3.6.1 Black Balancing 34
3.6.2 Update/Downgrade the Firmware 34
3.7 TimeCode and SYNC **35**
3.7.1 TC port and TC cord 35
3.7.2 External TC 36
3.7.3 Beeper and SYNC 36
3.8 Configure the Camera **37**
3.8.1 Preset 37
3.8.2 Shutter Display Mode 38
3.8.3 Camera Fan and Core Temperature 38
3.8.4 ISO/EI 39
3.9 Anamorphic Recording **40**
3.10 Kinefinity App Instruction **41**
4. TECH & SPEC AND CONNECTORS **43**
4.1 Technical Specifications **43**
4.1.1 MAVO Edge 8K SPEC 43
4.1.2 MAVO Edge 8K Frame Rates and FPS 45
4.2 Connectors **46**
4.2.1 DC IN 46
4.2.2 RS 46
4.2.3 LENS 47
4.2.4 SYNC 47
4.2.5 TC 48
4.3 Mechanical Drawings **49**
4.3.1 MAVO Edge 8K Body with KineMOUNT 49
4.3.2 MAVO Edge 8K Body with KineMOUNT and EF 3 Mounting Adapter 52
4.3.3 MAVO Edge 8K Body with KineMOUNT and E Mounting Adapter 55
4.3.4 MAVO Edge 8K Body with KineMOUNT and PL Mounting Adapter 58

©2021 Kinefinity Inc.

1. CAMERA OVERVIEW

1.1 Interfaces and Buttons

The native mount is KineMOUNT, which works with mounting adapters to adapt different lenses.

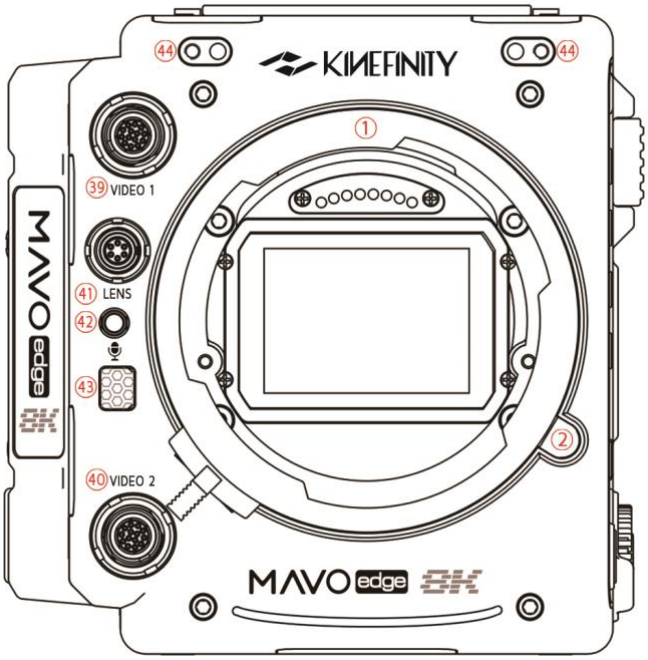

Camera Front (KineMOUNT)

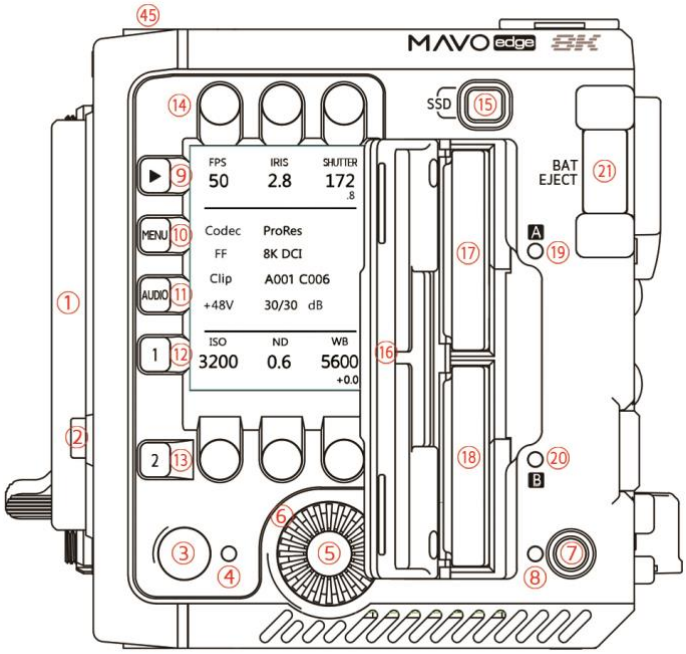

Camera Left (KineMOUNT)

#	Name	#	Name	#	Name
1	KineMOUNT	8	Power Status LED	15	SSD Button
2	KineMOUNT Release Button	9	Playback Button	16	SSD Door
3	Record Button	10	MENU Button	17	SSD A
4	Camera Status LED	11	AUDIO Button	18	SSD B
5	Wheel Button	12	LUT/Preset List	19	SSD A Status LED
6	Wheel	13	Zoom Button	20	SSD B Status LED
7	Power Button	14	FPS/Iris/Shutter/ISO/ND/WB	21	V-Mount Battery Release Button

CAUTION Never cover the air intake at the rear of the body and the air vent at top of the body when the camera is powered.

©2021 Kinefinity Inc.

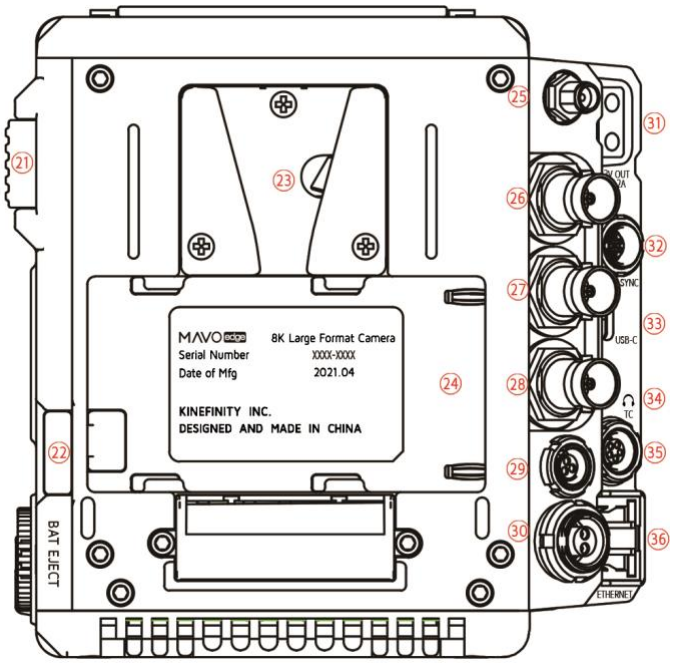

Camera Back

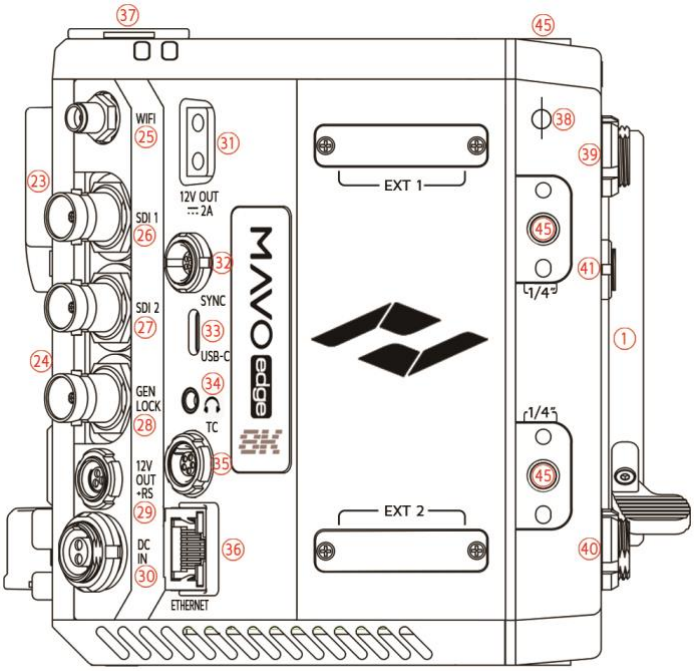

Camera Right (KineMOUNT)

#	Name	#	名称	#	名称
22	BP-U30 Release Button	30	DC Power Input	38	Optical Indicator
23	V-mount Battery Plate	31	D-Tap Power Output	39	Video Port 1
24	BP-U30 Plate	32	SYNC Port	40	Video Port 2
25	WIFI Antenna Port*	33	USB-C Port	41	LENS Port
26	3G-SDI Port 1	34	3.5mm Headphone Jack	42	3.5mm MIC Port
27	3G-SDI Port 2	35	TC Port	43	In-camera MIC
28	GENLOCK Port	36	ETHERNET Port	44	KineMON Screw Holes (M3 x2)
29	RS Port	37	Audio XLR Port x2	45	1/4" Threaded Hole

* The WIFI port is manufactured with internal-pin and internal-bore; the antenna is SMA male pin and female head featured with 5dBi and supports WIFI frequency band.

For the definition of ports, please refer to 4.2 Connectors. SYNC, RS, Lens and Video ports are proprietary.

©2021 Kinefinity Inc.

1.2 Functions of Buttons

In Live View mode, use buttons and the wheel to set the parameters; in Playback mode, use the Wheel and shortcut buttons [1] and [2] to quickly select and switch between clips.

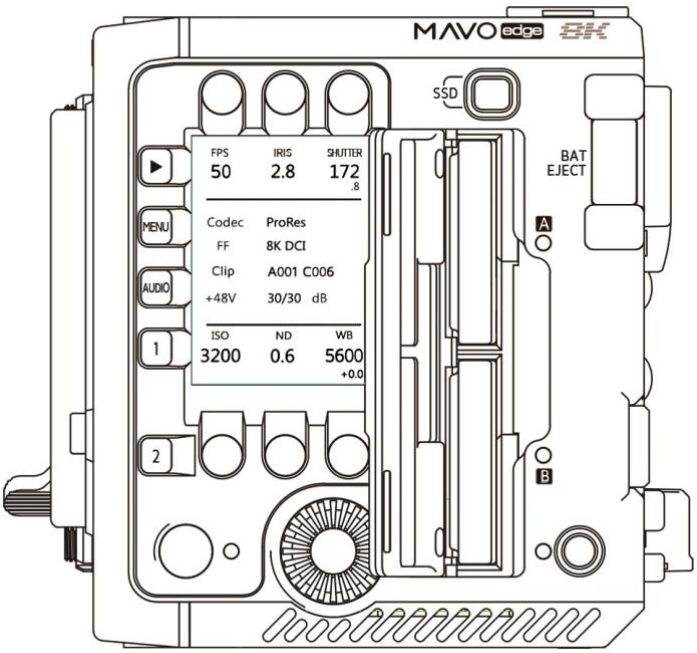

Operation	Rotation		Note
Wheel Rotation	Set Iris or ND/Quick Select		In Playback mode, fast forward and fast reverse the clip by the wheel.
Operation	**Press**	**Press and Hold for 1 sec**	**Note**
Wheel Button	Waveform/Confirm Operation		
FPS	Set FPS		Shooting(CMOS imaging sensor) FPS
IRIS	Set Iris		
SHUTTER	Set Shutter		Shutter Angle or Speed
ISO	Set ISO/EI		
ND	Set ND (When ND is on)	Switch ND/Clear	Set ND value while ND is chosen
WB	Set Color Temp	Set Tint	Set complete list by menu
▶	Play/Pause (In Playback mode)	Playback/Live View mode	
MENU	System settings		
AUDIO	Gain Adjustment	Audio Setting	Set Audio by the wheel
1	Switch LUT	Preset List	In Playback Mode, previous clip
2	Zoom		In Playback Mode, next clip
●▯	Record		Switch from Playback to Live View
⏻	Power on/off	Force Power-off (Hold for 5 secs)	
SSD	Choose KineMAG in Slot A/B		Slot A is with full speed and Slot B is with high speed.

©2021 Kinefinity Inc.

1.3 Interface and Parameters

After booting up, the camera enters Live View mode: parameters of the current scene display on the screen.

#	Name	#	Name
1	CMOS Imaging Sensor FPS	16	Real-time Core Temperature
2	Shutter Speed/Shutter Angle	17	USB Indicator
3	Exposure Mode	18	WIFI Indicator (When WIFI is connected)
4	ISO/EI ASA	19	CH1/2 Audio XLR Indicator
5	Iris Number (If applicable)	20	CH3/4 BI/3.5mm MIC Indicator
6	ND Value (Only with ND on)	21	CH1/2 VU Meter
7	Color Temperature	22	CH3/4 VU Meter
8	Tint	23	Roll Number
9	Monitoring LUT	24	Clip Number
10	Image Format	25	Record Indicator
11	Record Resolution	26	Digital Horizon
12	Codec	27/29	SSD A/B Indicator
13	Real-time Power Voltage	28/30	SSD A/B Status/Capacity
14	KineBAT Remaining Capacity	31	Time Code
15	UPS Indicator	32	Waveform

NOTICE **CMOS Imaging Sensor FPS** is the actual capturing FPS of the CMOS imaging sensor; **Project FPS** is the playback FPS of the footage in post-production.

NOTICE **EF Iris control** is only for lenses on the White list; other lenses might not be recognized or controlled.

NOTICE **Clean image output:** set by [Menu→Setting→Main Screen→Brief].

©2021 Kinefinity Inc.

1.4 Default Settings

The list below features the default settings of MAVO Edge 8K:

Type	Name	Default Value	Type	Name	Default Value
SHOOTING	Default Codec	ProRes 422HQ	SETTINGS	Active Mount	Enhanced
	Project FPS	25fps		Wheel Control	EF Iris
	Project Blanking	None		Fan Speed	40%
	Image Format	FF		Fan Control	Slow While Recording
	Rec Resolution	4K DCI (4096x2160)		TimeCode	Free Run
	Sensitivity Mode	ISO Mode		ND tuning	0.03
	ISO Highlight Stops	5.0		Main Screen	Brief
	Sensor FPS	25fps		SSD File System	HFS
	Shutter Mode: Angle	1/50s		Power Threshold (V)	12V
	ISO/EI	ISO 800		Low Voltage Shutdown	On
	Color Temperature	5600K	NETWORK	WIFI	Off
	ND	Clear		Stream	Off
	LUT	KC_NEUTM		Bit Rate	Regular
LIVE VIEW	Waveform Based	LUT	SYNC	Tally Lamp	On
	Waveform Size	Short		Beeper	On
	Zebra Pattern	None		Recording Beeper	On
	Zoom Ratio	100%: On	SDI	OSD	On
	Anamorphic Ratio	None		LUT	KC_NEUTM
	Monitoring FPS	60	AUDIO	CH1/CH2 Level (48V)	30dB
	Shutter Mode	Time		CH3/CH4 Level (48V)	30dB
	Color Temp List	Simple		Headphone Volume	0dB
	SSD	Remaining Time		Headphone Source	CH1/2
	Digital Horizon	On		CH1 Phantom 48V	On
PLAYBACK	Playback at	×1		CH2 Phantom 48V	On
	Clip End	Loop		CH1/2 Record	CH1/2
SYSTEM	Language	English		CH3/4 Source	Built-in MIC

Restore to factory settings by:

[Menu→ System→ Factory Reset]

NOTICE When the camera is powered with a USB storage device plugged in, it will automatically revert to factory settings while booting up.

NOTICE Before perform factory reset, user settings can be exported from the camera. After the reset is done, user settings can be imported to the camera.

[MENU→System→Export/Import User Settings]

©2021 Kinefinity Inc.

2. QUICK GUIDE

2.1 Power Supply

The MAVO Edge 8K allows different types of power supply:

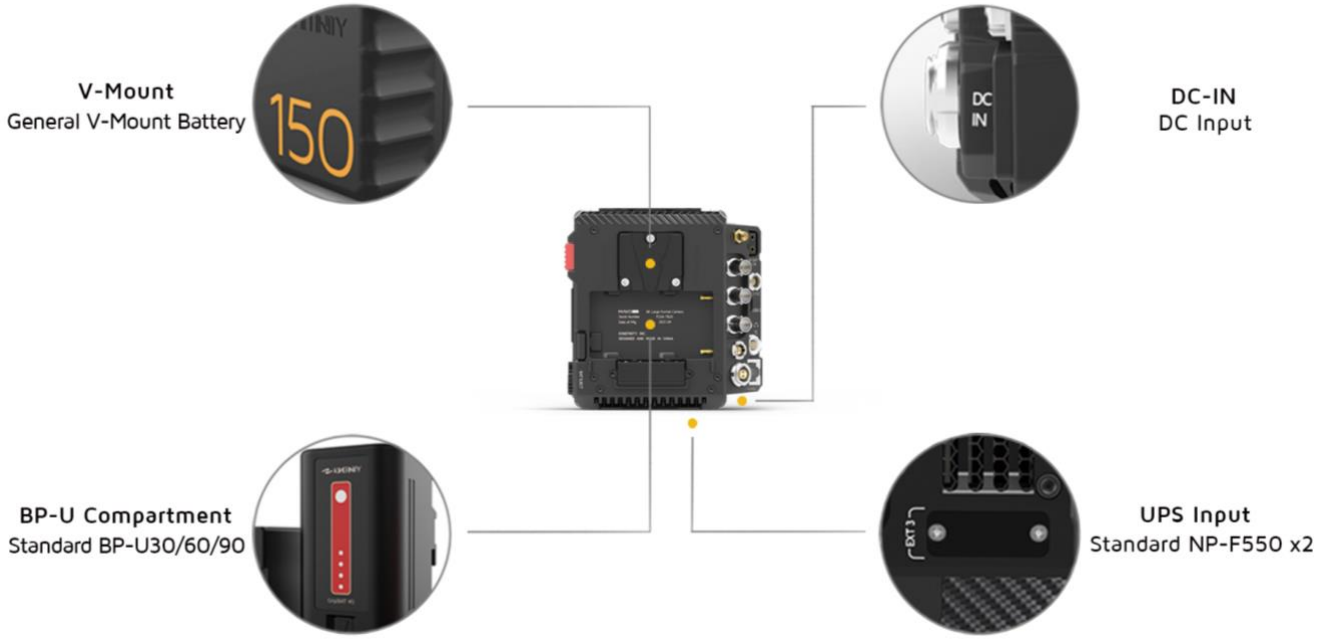

- **PD KineBAT 150** (Compatible with V-mount batteries) fits Edge V-Mount hybrid battery plate on the back. Single PD KineBAT 150 can power the camera for more than 3 hours.
- **GripBAT 4S** (Compatible with BP-U30) can be installed on the BP-U compartment on the back of MAVO Edge 8K. With a higher capacity up to 52Wh, the GripBAT 4S still enables a power supply about 60 mins even mounting KineMON-5U monitor on the camera.
- **GripBAT 2S:** Due to specialized UPS power contacts at the bottom of the camera, MAVO Edge 8K can be constantly powered by two NP-F550 batteries with the UPS Baseplate designed by Movcam. (Recommend using GripBAT 2S as its capacity is 75% higher than regular 2000mAh batteries in the market. It has high working current with long battery time.) No need to turn off the camera when replacing the battery.
- **Power Cords:** Connect different power cords to the 2-pin DC IN port of the camera body:

DC IN Definition

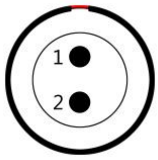

1. VDD
2. Ground

©2021 Kinefinity Inc.

- **D-Tap Power Cord:** Connect the D-Tap plug to the D-Tap socket of battery/battery plate, and connect 2-pin push-pull connector to the 2-pin power socket of the camera body;
- **XLR Power Cord:** Connect the 4-pin standard XLR connector to the XLR socket on the storage battery (11~26V), and connect the 2-pin push-pull connector to the 2-pin power port on the camera body;
- **100W Power Cord:** Its output is a professional 2-pin push-pull connector, which matches the power sock of Kine Cameras; another port is USB-C with an E-Mark chip, which best matches 65W PD Power Adapter to power the camera easily.

CAUTION The voltage of power supply recommends as 11V~26V. Using a Power supply higher than 26V may burn the body.

CAUTION Please heed the direction of the 2-pin DC IN port on the camera body while plugging/ unplugging the power cords. The red dot/notch indicates the direction in which the power cable is inserted. Please pay attention to the positive and negative poles of the D-Tap port.

NOTICE A V-mount to Anton-Bauer Plate Adapter is required if you use Anton-Bauer (Gold Mount) broadcast batteries.

NOTICE When two of the four power supplies are available at the same time, the camera automatically chooses the source with higher voltage, and allows hot-swap of batteries.

NOTICE To save power, use a different power supply for monitors and turn off WIFI.

NOTICE If the voltage detected is too low to continue shooting, the camera will automatically stop recording to avoid damage to the clip.

©2021 Kinefinity Inc.

2.2 Mount

MAVO Edge 8K comes with a native KineMOUNT, which needs a mounting adapter to attach a lens to the camera. The available adapters include EF Mounting Adapter, EF Mounting Adapter with KineEnhancer, PL Mounting Adapter, SONY E Mounting Adapter, and also ARRI LPL Mounting Adapter.

EF Mount PL Mount LPL Mount E Mount

There are only three steps to install mounting adapters to the KineMOUNT. Here we take EF adapter as an example. Turn off the camera and then:

1. **Release**: Keep pressing the KineMOUNT Release Button and rotate the locking ring of the KineMOUNT counter-clockwise, then take off the KineMOUNT cover;
2. **Install**: There is a positioning slot above the electronic contacts of the KineMOUNT, please align the arcuate protrusion on the adapter with the locating slot of KineMOUNT when attaching the mounting adapter to the camera;
3. **Lock**: Rotate the locking ring of KineMOUNT clockwise to fasten the adapter to KineMOUNT firmly.

Power on the camera after the adapter is mounted. Press [MENU] button and check the bottom of the menu. If it presents EF sys 9 (Or a different number), that means you have mounted the adapter successfully.

CAUTION Power off camera when swapping different adapters, else camera or adapters may get burned.

CAUTION As the FFD of KineMOUNT is very short, please don't try to attach any lens directly to KineMOUNT, except lenses tailored for KineMOUNT, or it will cause permanent damage to CMOS imaging sensor and OLPF.

NOTICE When installing the EF Mounting Adapter with KineEnhancer, please don't touch the optical glass. Any damage to the glass is irreversible, and the glass has to be replaced.

©2021 Kinefinity Inc.

2.3 Lens

Based on active locking mount as EF Mounting Adapter II, the whole-new EF 3 Mounting Adapter is designed in accordance with the traditional DSLR lens rotation method and has been much improved. Compared to the previous version, EF 3 Mounting Adapter not only possesses the traditional way to rotate the lens clockwise, but also keeps active locking to fasten the lens, thus the EF lens can be installed quickly and locked clockwise as the PL lens, which is suitable for the utilization of Follow Focus when shooting.

Steps of attaching EF lens to new EF 3 mount:

1. **Unlock:** Rotate the locking ring of the EF 3 mount counterclockwise till stop; (Take off all the caps or covers from the camera and the lens mount);
2. **Install EF lens:** Align the red dot on the lens, the white line on the locking ring and the dot on the mount. And make sure that the pin on the mount matches the hole of the lens; rotate the EF lens clockwise till the release button up;
3. **Lock:** Rotate the locking ring of the EF 3 mount clockwise as the arrow direction until fastened firmly.

Steps of detaching EF lens from new EF 3 mount:

1. **Unlock:** Rotate the locking ring of the EF 3 mount counterclockwise till stop;
2. **Detach EF lens:** Fully press the release button on the right side of the EF 3 mount and rotate the EF lens counter-clockwise.

Steps to attach EF lenses by EF II adapter:

1. **Release**: Rotate the locking ring of the EF mount clockwise, take off the cover and the lens cover;
2. **Install**: Align the "red dot" on the lens with the "red dot" on the mounting adapter. Make sure that the pin on the mount engages with the hole in the mount of the lens. For the EF-S lens, align the white square on the lens with the one on the mount.
3. **Lock**: Rotate the locking ring (NOT the lens) counterclockwise (Follow the arrow of "lock sign" on the mount) until it is fastened firmly.

CAUTION The mounting adapter might be burned if a lens/adapter with all-metal rear end is attached directly to the camera body. In this case, please keep electronic iris control off:

[MENU→Settings→ Active Mount→Disable].

©2021 Kinefinity Inc.

2.4 Monitoring

Please use a recommended EVF or field Monitor with Video port, 3G-SDI (Not HD-SDI) ports, and connect the input port of EVF or monitor to the output port of the camera body with a high quality cable.

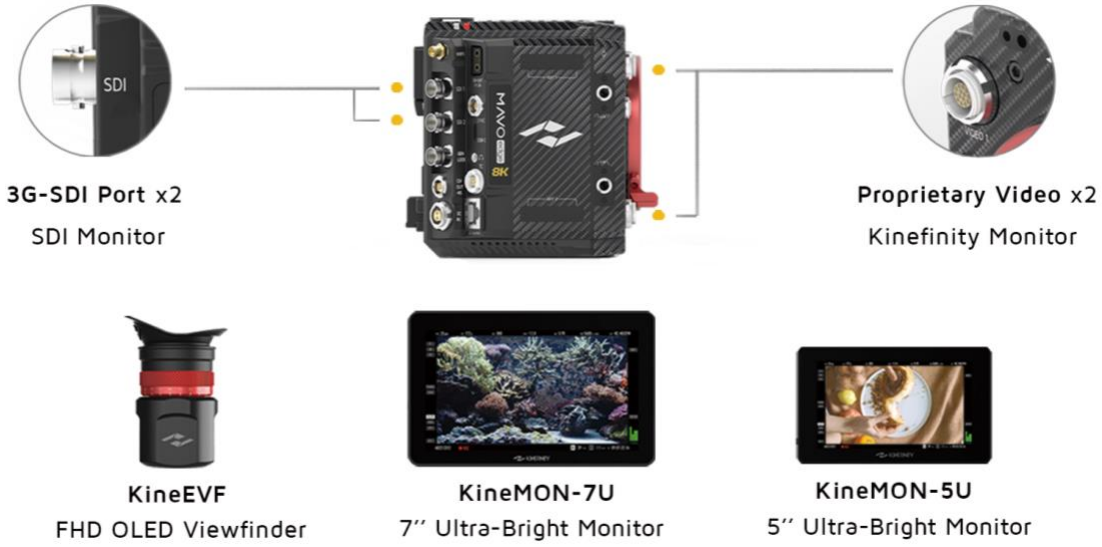

- **KineMON-5U Ultra-Bright Monitor:** With the Kine Video Cord, our monitor gets both power supply and video signal through the same cable. It is easy to mount it on the camera body firmly by using appropriate accessories for different needs.
- **KineMON-7U Ultra-Bright Monitor:** Use the same Kine Video Cord as KineMON-5U to get both power supply and video signal.
- **KineEVF Full-HD OLED Viewfinder:** Also use the Kine Video Cord for power supply and video signal, and could be mounted on the camera with the tailored KineEVF Bracket.
- **SDI monitor:** With 3G-SDI ports, monitoring by the director monitor or the DIT monitor.

With the KineMON-5U and KineMON-7U, the latency is lower than 100ms; with KineEVF, the latency is lower than 80ms.

CAUTION Connect the monitors to the camera by a SDI cable (75Ω) before they are turned on, and please also pay attention to the direction of the D-Tap cord.

©2021 Kinefinity Inc.

The functions of Buttons on KineMON-7U

The KineMON-7U is added with record and playback buttons and Tally light to trigger corresponding functions on camera body.

Liveview Mode

- **Button 1:**
  - **Peaking focus:** Press Button 1, to show peaking with red line or not, assist cameraman on image focus;
  - **Peaking focus sensitivity:** Press Button 1 for three seconds to enable setting of sensitivity of peaking function.
- **Button 2:**
  - **RGB Histogram on input video:** Press Button 2, to show histogram at the left corner of screen;
  - **False color on input video:** Press Button 2 for three seconds to show false color which IRE based on Arri False Color scale.
- **Power Button:** Push up or down Power button at the side to turn on or off the monitor quickly. There is also an LED indicator for status of monitor.
- **Record Button:** Press record button to trigger the function on camera body. Tally light shows red; press record button one more time to stop record.
- **Playback Button:** Press playback button (triangle icon) to enter the playback mode.
- **Wheel:**
  - Tuning brightness of monitor. Press Wheel, and rotate the wheel, will change brightness of monitor at 10% step while 60% brightness in default;
  - Set rotation of monitor. Press Wheel for three seconds, the monitor can be set rotation 180 deg manually or auto rotation based on rotation angle of monitor itself.

Playback Mode

In playback mode, button 1, button 2 and wheel on the side of monitor upgrade with new functions:

- **Button 1:** switch to the previous clip.
- **Button 2:** switch to the next clip.
- **Wheel:** Press wheel to play or pause the current clip.
- **Wheel:** Rotate wheel to speed or back the current clip.

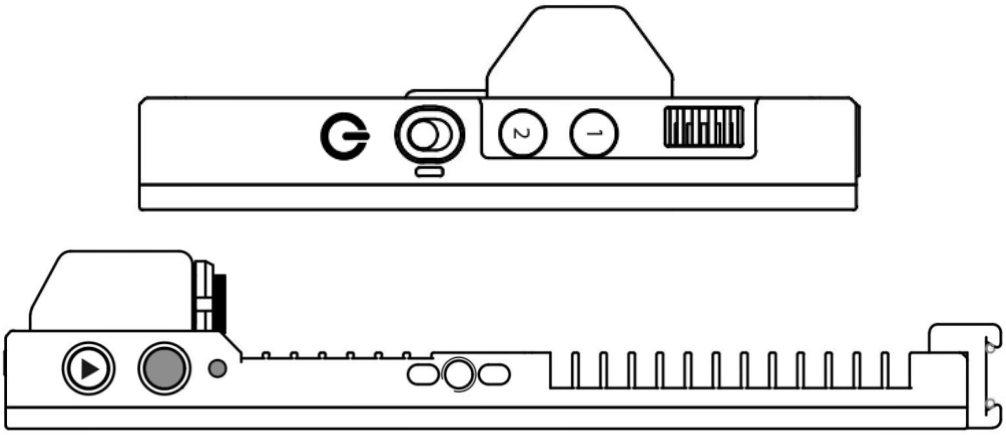

©2021 Kinefinity Inc.

Function of Buttoms on KineMON-5U

- **Button 1:**
  - **Peaking focus:** Press Buttin 1, to show peaking with red line or not, assist cameraman on image focus;
  - **Peaking focus sensitivity:** Press Button 1 for three seconds to enable setting of sensitivity of peaking function.
- Button 2:
  - **RGB Histogram on input video:** Press Button 2, to show histogram at the left corner of screen;
  - **False color on input video:** Press Button 2 for three seconds to show false color which IRE based on Arri False Color scale.
- **Power Button:** Push up or down Power button at the side to turn on or off the monitor quickly. There is also an LED indicator for status of monitor.
- **Wheel:**
  - Tuning brightness of monitor. Press Wheel, then rotate the wheel, it will change brightness of monitor at 10% step while 60% brightness in default;
  - Set rotation of monitor. Press Wheel for three seconds, the monitor can be set rotation 180 deg manually or auto rotation based on rotation angle of monitor itself.

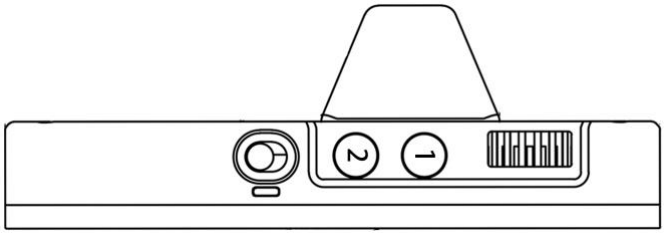

©2021 Kinefinity Inc.

Function of Buttons on KineEVF

- **Button 1:**
  - **Peaking focus:** Press Button 1, to show peaking with red line or not, assist cameraman on image focus;
  - **Peaking focus sensitivity:** Press Button 1 for three seconds to enable setting of sensitivity of peaking function.
- **Button 2:**
  - **RGB Histogram on input video:** Press Button 2, to show histogram at the left corner of screen;
  - **False color on input video:** Press Button 2 for three seconds to show false color which IRE based on Arri False Color scale.
- **PowerButton:** Push up or down Power button at the side to turn on or off the monitor quickly. There is also an LED indicator for status of monitor.
- **Wheel:**
  - Tuning brightness of KineEVF. Press Wheel, then rotate the wheel, it will change brightness of KineEVF at 10% step while 60% brightness in default;
  - Proximity Sensor, on/off. Press Wheel for three seconds.
- Diopter ring. Set from -6D to +2D based on military spec (from 600 degrees of myopia to 200 degrees of hyperopia).

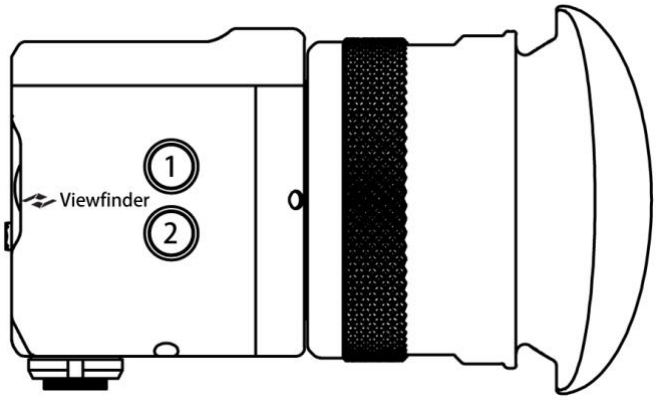

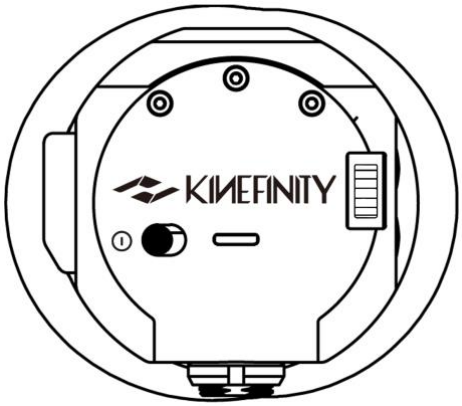

©2021 Kinefinity Inc.

2.5 Recording Media SSD

Different from the previous Kinefinity cameras, the MAVO Edge 8K is designed to have dual-card slots internally, using a solid-state drive based on the NVMe M.2 interface, which is smaller in size and has a higher read and write speed.

2.5.1 Introducing KineMAG Nano

KineMAG Nano 1TB is composed of KineMAG Nano body and M.2 NVMe internal 2280 SSD, which has a read and write speed up to 10Gbps. The card body itself has two high-speed ports:

- **Camera port:** Designed for the dual PCIe 3.0 interface card slot of the MAVO Edge 8K camera;
- **Universal USB-C port:** The USB-C port supports the USB3.1 Gen2 protocol. No card reader is needed, and just one Type-C cable that supports USB3.1 Gen2 can quickly transfer the contents of the memory card to a Windows-based PC workstation/notebook or Mac. The card write can write at speeds of up to 10Gbps.

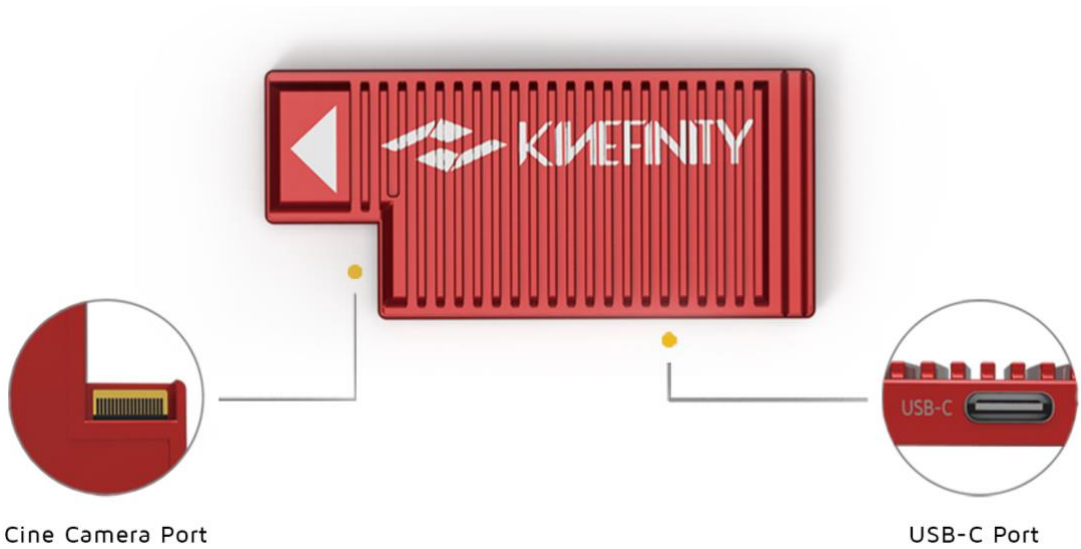

More importantly, the KineMAG Nano 1TB has a built-in specially optimized NVMe M.2 1TB SSD, which makes the KineMAG Nano 1TB have two major safety features: Read-only feature and RAID 5 redundancy, so that whether you are copying the card or the card being written at high speed in the camera, the safety and robustness of the memory card are greatly improved, and no need to worry about the card safety.

NOTICE MAVO Edge 8K features different write speeds in slot A and slot B. Slot A is with Full Speed and slot B is with High Speed. Remember to choose KineMAG Nano in slot A when you shoot 8K 30fps ProRes 4444 and above, or it will interrupt your shooting work.

©2021 Kinefinity Inc.

2.5.2 The Use of KineMAG Nano

The use of KineMAG Nano is very simple. Open the SSD door and insert the KineMAG Nano 1TB SSD into the A or B card slot before powering on the camera; you can also insert two SSD cards at the same time. The SSD card slot is equipped with a built-in magnet door. Above the SSD card slot is the SSD function button, which has the function of managing the SSDs in the A and B slots; on the right side of the card slot are two SSD indicator lights for the upper slot A and lower slot B, which indicate the status of the SSD in the slot.

Status of SSD indicator (A, B):

- ●**Red:** KineMAG Nano in the slot is recording/playing the clip;
- ●**Green:** KineMAG Nano in the slot is selected;
- ●**Orange:** KineMAG Nano in the slot is not selected;
- ●**Grey:** KineMAG Nano is not in the slot.

The monitor screen will show the SSD status:

- **Yellow [STBY]:** The SSD indicator is off, which means that there is no SSD in the slot, so the camera cannot record. Insert the SSD and reboot the camera;
- **Yellow [STBY]:** The SSD indicator is yellow, which means there is an SSD in the card slot but it is not displayed on the screen. The file system might be incorrect or the card data is faulty, you still can't shoot under this status. Please follow the following steps:
  - **The first step:** Ensure the data security of the card;
  - **The second step:** Format the SSD by [MENU→Shoot→Format SSD]. After the SSD formatting is completed, the camera will automatically detect the SSD. Then, the SSD will display the remaining time, roll number and footage serial number of the selected card A/B.
- **Green [STBY]:** The SSD will display the remaining time and roll number of the selected card A/B. At this time, the SSD indicator of the relevant card is green, and you can shoot and the footage will be stored in the SSD.
- **Red [•REC]:** The camera is recording. The indicator of the selected card A/B card is red at this time.

CAUTION Data can't be recovered after the SSD is rebuilt/formatted; please backup all data before formatting. Before confirm the operation, please check the SSD you format is SSD A or SSD B.

NOTICE Please insert the SSD before the camera is powered on, or the SSD will not be detected.

NOTICE We only recommend KineMAG Nano. The performances of a 3rd-party SSD are not guaranteed. We cannot provide technical support or help on recording issues such as frame drop or data loss for 3rd-party SSD.

NOTICE Please prepare backup SSD cards in case of emergency on set.

©2021 Kinefinity Inc.

2.6 Audio

Compared with the previous Kinefinity cameras, MAVO Edge 8K integrates KineBACK-W functions such as the XLR port into the body. There are three audio recording interfaces that support four audio tracks recording at a time:

- **In-camera MIC** (CH3/4): Record audio by in-camera MIC even if there is no KineAudio or 3.5mm MIC;
- **3.5mm Plug-in-power port** (CH3/4): Suited for 3.5mm MIC;
- **KineAudio dual XLR ports with Phantom 48V** (CH1/2): KineAudio is a high-quality pre-amp audio module with Phantom 48V, and it also has dual XLR input, dual channel and supports 48V phantom microphone. KineAudio CH1 and CH2 channel can be set independently.

Adjust volume gain and set audio function by [AUDIO] button:

- Press [AUDIO] button: Set Gain size and headphone volume of CH1, CH2 and CH3/4;
- Press and hold [AUDIO] button for one sec:
  - **Headphone Source:** Choose CH1/2 or CH3/4 as the headphone source;
  - **Phantom 48V Input:** Choose CH1 or CH2 Phantom 48V input on/off;
  - **CH1/2 Record:** Choose to record CH1/2 at the same time or record CH1 or CH2;
  - **CH3/4 Source:** Choose CH3/4 as the source of in-camera MIC or 3.5mm MIC.

Audio input with In-camera MIC and 3.5mm MIC Port

- To use the In-camera MIC for audio recording, press and hold the [AUDIO] button for one sec, set [AUDIO Button→Headphone Source→CH3/4], then select [CH3/4 source→In-camera MIC]. The audio will be recorded by In-camera MIC.
- To use 3.5mm audio jack to connect an external microphone for audio recording, press and hold the [AUDIO] button for one sec, set [AUDIO Button→Headphone Source→CH3/4], then select [CH3/4 source→3.5MM]. The audio will be recorded by 3.5mm MIC.

Phantom 48V audio input

To use a microphone that needs phantom power, press and hold the [Audio] button for one sec, set [AUDIO→Headphone Source→CH1/2]

In addition, the channel can also be set in three modes:

- Two audio channels as CH1: Left Channel =Right Channel = CH1;
- Two audio channels as CH2: Right Channel = Left Channel = CH2;
- Stereo: Left Channel = CH1, Right Channel = CH2 (Default).

©2021 Kinefinity Inc.

Generally, the camera audio can be set as one input if just using one MIC.

3.5mm Headphone Jack

To use a 3.5mm headphone for audio checking, the channel can be selected to CH1/2 or CH3/4： Press and hold the [Audio] button for one sec, set

[AUDIO button→Headphone Source→CH1/2]

CAUTION When using microphones that don't need Phantom power, please turn off the Phantom 48V.

NOTICE The audio will be packed into mov file only when the project FPS is the same as CMOS imaging sensor FPS, or it will be recorded into a separate wav file. For example, if the project FPS is 25.000, when the CMOS imaging sensor FPS is set to 30.000, it will show yellow 30.000 on the UI in the beginning, which indicates the audio is recorded into a separate WAV file.

2.7 e-ND

MAVO Edge 8K incorporates with internal full-spectrum e-ND which is quite different from previous cameras.

E-ND is based on modern liquid crystal materials and optics controlled electronically, which is completely unlike conventional technology such as a rotating filter wheel or polarizing ND Filters. It covers a wide range from 0.6 to 2.4 (2 stops to 8 stops), and brings sharp images with color fidelity.

Seamless adjustment brings a very important feature: accurate exposure stop, which is what traditional glass ND filters don't have. You can also set the accuracy to one stop (0.3) for each rotation, but the default setting is seamless adjustment by 0.1 stop (0.03).

Menu Operation

Set e-ND

[MENU→

Settings→ND: 0.03/0.3]

The ND function is convenient to use:

- Switch internal ND : press and hold the [ND] button for one sec;
- Set the ND value when the ND is on: press the [ND] button and rotate the wheel,to set the ND value from 0.6 to 2.4 (2 stops to 8 stops).
- When the camera is mounted with cinema/manual lenses, using the wheel to set the ND value (default is Wheel Control: Iris value)

[MENU→Setting→Wheel Control: e-ND]

In such way, the ND value can be set directly without pressing the [ND] button.

2.8 Playback

To enter the playback mode, you can press and hold the [Playback] button for one sec in Live View mode, and then you are able to trigger play/pause of the current clip by pressing the [Playback] button again.

Loop playback

The way to play a clip in a loop is to set by [MENU→Playback→Clip End: Loop]. Playback continues from the beginning of the same clip again in accordance with project fps.

Clip switching

Press the shortcut button [1] to switch to the previous clip; press shortcut button [2] to switch to the next clip. Fast forward and fast reverse are available by the wheel. Please note the parameters in Playback mode are different from the ones in Live View Mode.

Playback speed

To change the playback speed in the menu, press [MENU→Playback→Playback at: ×1]. There are seven speed choices: ×1/4, ×1/2, ×1, ×2, ×4, ×8, ×16.

Switch back to Live View mode

Press [REC] button or press and hold [Playback] button for one sec to switch back to Live View mode.

©2021 Kinefinity Inc.

2.9 Codec

The camera comes with ProRes codecs, set the default codec by:

[MENU→Shoot→ Default Codec →ProRes (.mov)]

MAVO Edge 8K supports in-camera ProRes recording at all resolution and fps: 8K/6K/5K/4K/2K even 4K Wide 100fps for 422 format. Besides ProRes422HQ, MAVO Edge 8K also supports ProRes4444XQ, 4444 and keeps all dynamic range of ProRes clips with KineLOG3, while the monitoring LUT will not be burned into the clips.

NOTICE The camera supports ProRes4444XQ recording to 8K up to 30fps, ProRes4444 to 8K up to 50fps.

Duration Reference

Settings		Duration @KineMAG Nano 1TB
4K@25fps	ProRes422LT(.mov)	6 hours 51 mins
4K@25fps	ProRes422HQ(.mov)	2 hours 42 mins
4K@25fps	ProRes4444(.mov)	1 hour 48 mins
5K@25fps	ProRes422LT(.mov)	3 hours 44 mins
5K@25fps	ProRes422HQ(.mov)	1 hour 44 mins
5K@25fps	ProRes4444(.mov)	1 hour 09 mins
6K@25fps	ProRes422LT(.mov)	2 hours 36 mins
6K@25fps	ProRes422HQ(.mov)	1 hour 12 mins
6K@25fps	ProRes4444(.mov)	48 mins
8K@25fps	ProRes422LT(.mov)	1 hour 27 mins
8K@25fps	ProRes422HQ(.mov)	40 mins
8K@25fps	ProRes4444(.mov)	27 mins

©2021 Kinefinity Inc.

2.10 Downscaling and Cropping Mode

Oversampling/Downscale

Oversampling/Downscale: recording (Output) resolution is less than the actual sampling resolution by CMOS imaging sensor, while the image format of the recording is the same as the image format of sampling. As all effective area of the CMOS imaging sensor is used, there is lower noise level and sharper image. Oversampling at FF is 4K. For most cases, downscaling 4K ProRes at FF is recommended.

Cropping Mode

Cropping means that the CMOS imaging sensor only utilizes a center part of the image as effective sampling area. Cropping mode boosts frame rate higher than full resolution sampling:

- Output 8K Wide full resolution sampling, up to 70fps;
- Cropping Mode, 5K Wide (S35), up to 108fps;
- Cropping Mode, 4K Wide (M4/3), up to 145fps.

Oversampling + Cropping = infinity combination of resolution, fps and framing.

Select Cropping Mode by:

Press and hold shortcut button [1] for one sec or by:

[MENU→Shooting→Image Format]

©2021 Kinefinity Inc.

2.11 Access clips on PC/MAC

Access KineMAG Nano on PC/MAC

To access Clips from KineMAG Nano on PC/MAC，a USB-C cable is used to connect SSD to the workstation:

- MAC platform (MacOS Sierra or higher version) can access KineMAG Nano with HFS file format;
- Windows platform can access KineMAG Nano with HFS file format after installing software such as HFS+ or MacDrive.

Play ProRes Clips on PC/MAC

All dynamic range of KineLOG3 ProRes clips is retained, and monitoring LUTs will not be burned into the clips. Therefore, LOG clips retain all of their dynamic range and color information. While playbacking the footage at a computer, using the LUT file that was used inside the camera will make the image look identical to the one while monitoring during the recording.

When using Windows you need to install Quicktime7 to access ProRes MOV file.

Clip Folder

Each clip is saved in the SSD as a folder. The folder name is the same as the clip name, but no file extension, eg: folder A003C027_20210421_91B2 (for the meaning of the clip name, see 3.1 Footage and Projects Information) includes:

- A003C027_20210421_91B2.mov: ProRes mov file
- A003C027_20210421_91B2-CH1.wav, A003C027_20210421_91B2-CH2.wav, A003C027_20210421_91B2-CH3.wav and A003C027_20210421_91B2-CH4.wav: are the uncompressed audio files of CH1, CH2, CH3 and CH4;
- ***.cube and ***.look: the LUT while monitoring, and the format is cube or look format;
- A003C027_20210421_91B2_snapshot.bmp: the snapshot of this clip, resolution 1/2x1/2;
- A003C027_20210421_91B2-slate.txt: contains most of the information when shooting the clip, like shutter speed, ISO, highlight, color temp, etc;
- 0.mt: internal camera information when recording.

Please send xxx-slate.txt and 0.mt to Kinefinity if clip files appear to be abnormal.

NOTICE If Project FPS is the same as CMOS Imaging Sensor FPS (Shooting FPS), audio is embedded into ProRes mov file, else audio is not embedded into mov file. But the camera always records audio into four wav files at the same time, no matter slow-mo, quick-mo or regular speed.

NOTICE When importing mov files into editing software, enter and search *.mov in the dialog box, all mov files will be listed automatically, then press CTRL+A / ⌘+A to select all mov files and drag them into your NLE.

©2021 Kinefinity Inc.

3. SETTINGS AND ADVANCED OPERATIONS

3.1 Footage and Slate

When starting a new project, please make sure:

- **Project FPS:** the fps used by playback clips, editing clips or delivery matches up with the project FPS of the camera. For example: 24fps for feature movie and 25fps for TV (PAL). Project FPS should not be changed after the project kicks off;
- **Slate information:** set clip name, director's name, DoP's name, etc. of the project. You can find all the information in slate.txt.
- **Codec:** choose in-camera ProRes;
- **Project Blanking:** choose from 2.4:1, 2:1, 17:9, 16:9, 4:3 or Instagram ratio 1:1, also 9:16 and 1:2 for smartphone screens. Project Blanking is also applicable for anamorphic shooting.

Codec: based on the project and post workflow:

- **In-camera ProRes:** most of the projects can be recorded in ProRes 422HQ (Visually lossless), and in-camera oversampling to 4K ProRes with high image quality, efficiency and reliability.

Set the project and clip information, such as Project Name, DoP's Name, Roll Num., Take Num. and so on, in [MENU]

- Set Project FPS: [MENU→Shooting→Project FPS]
- Set Slate: [MENU→Shooting→Slate]
- Set Project Blanking: [MENU→Shooting→Project Blanking]

Use the wheel and the shortcut button [FPS] to change the information. Everything will be on the Slate and the SSD Roll Label, see the example on the right:

Before a new project, we suggest setting Scene Num., Roll Num. and Take Num. as "1". Then Roll Num. of the SSD card will be incremented by 1 each time of shooting after formatted in the camera, convenient for DIT backing-up clips. The roll number is changeable when formatting SSD.

NOTICE Project Blanking only acts as a reference for monitoring, the camera records the full active image.

Menu Operation

Change Project FPS

[MENU→Shooting→Project FPS]

Menu Operation

Set Project Information

[MENU→Shooting→Slate]

Clip Name

A003C027_20210421_91B2

- A: Camera Unit;
- 003: Take Num.;
- C: Abb. Of Clip;
- 027: Clip Num.;
- 20210421: Date;
- 91B2: Random numbers.

SSD Roll Label

A003_6D09B6

- A: Camera Unit;
- 002: Roll Num;
- 6D09: First Four Digits of Serial Number;
- B6: Random numbers.

©2021 Kinefinity Inc.

3.2 Exposure and White Balance

The color temperature is tuned by directly adjusting the RGB channels of the CMOS imaging sensor to change original RAW data, rather than apply a digital LUT. Although you can modify the white balance of RAW data or change color temperature by post processing, all the modifications are based on the data you shoot previously. In order to minimize the distortion in post processing, it is essential to gain as accurate color temperature as possible in the shooting stage.

3.2.1 Color Temperature List

The camera has two types of color temperature lists for white balance: Simple List and Complete List.

- **Simple List:** With typical color temperatures such as 2800K, 3200K, 4300K, 5500K, 5600K, 6400K and User WB. Among them, UserWB is user-defined value, automatically generated when do the Auto WB manually.
- **Complete List:** Complete color temperatures according to the portfolios of color temperatures (In accordance with the 100K for a step) and lighting types. You can simply choose the one to match with your shooting condition.

Menu Operation

Change Color Temperature List

[MENU→Liveview→ Color Temperature List]

You can change color temperatures by the operation on the right.

Also, the Tint value can be changed by pressing and holding the shortcut button [WB] for one sec. When the number shows green, the Tint value is able to increase or decrease by rotating the wheel.

3.2.2 Auto White Balance

The Complete List of color temperatures meets the need for most cases. If the color temperatures listed in the built-in list are not enough to meet complex shooting lighting conditions, use a gray card or white card to conduct Auto WB to achieve a specific color temperature.

Menu Operation

Auto WB

[MENU→Liveview→

Custom White Balance]

To conduct the Auto WB:

1. Put a gray/white card in front of the camera;
2. Make the gray/white card cover the whole display by zooming;
3. Choose: [MENU→Liveview→ Custom White Balance]

The camera corrects the white balance parameters and writes the color temperature value to the UserWB. Once the UserWB is set, it can be used anytime later on.

©2021 Kinefinity Inc.

3.2.3 Waveforms

Waveforms, zebra stripes and histogram help cinematographers determine the exposure of images. Waveform indicates the brightness of images over the horizontal direction, while histogram shows the statistical information on the brightness of the whole image.

The Waveform matches the images by default and shows the LUT NeutM. Waveform will change according to the different LUT. Waveform without LUT can also be checked by the menu operation.

Menu Operation

Switch between different sources

[MENU→Liveview→ Waveform Based]

You can choose different displays for waveforms:

- **LUT:** The waveform information displays the distribution of RGB, which bases on RAW data after the processing of monitoring LUT loaded.
- **LOG:** The waveform information display R/G/B three color channels distribution based on the RAW data with KineLOG.

Menu Operation

Switch Size

[MENU→Liveview→ Waveform Size]

You can also choose a short waveform or complete waveform on the screen.

NOTICE When over 100% on the waveform of LUT, images do not mean overexposure definitely. The images are sure to be overexposed only over clipping line on waveform with LOG.
When choosing to monitor the LUT, even if the waveform exceeds 100%, it may not be overexposed because the LUT is loaded.

NOTICE Use [Zoom] button to check the exposure. Other functions can be used normally when waveform is on.

The waveform remains when you use the [Zoom] button to check the exposure or use other functions.

3.2.4 Zebra Pattern

Zebra strip is a very straightforward feature to show the overexposed area in an image.

Menu Operation

Set Zebra Threshold

[MENU→Liveview→ Zebra Pattern]

For Kine cameras, the zebra calculation is based on RAW data: RAW data is overexposed when the zebra stripes appears. So observe carefully to avoid unintentional over-exposure in most cases, as it will be pure white in the post workflow.

A threshold level can be set by pressing:

[MENU→Liveview→Zebra Pattern].

©2021 Kinefinity Inc.

The default threshold level is 90%, which means the zebra strip will display when the light exceeds 90% of the maximum range.

3.2.5 Digital Horizon

With digital horizontal guidance on the UI, cameramen are able to judge the image level precisely and quickly when shooting with shoulder, in handheld and other motion works.

In-camera Digital Horizon calibration: after updating the firmware, the digital horizon should be calibrated in a horizontal place. The steps are: [MENU→System→Digital Horizon Calibrate]

Menu Operation

Open Digital Horizon

[Config→Liveview→

Digital Horizon: on]

3.3 Slow-Mo and Quick-Mo

3.3.1 Two Types of FPS

Sensor fps: The capturing fps of the CMOS imaging sensor. Shown on the up center of the UI as well as on the slate, it can be set with the shortcut button [FPS].

Project fps: The fps for clips playback, editing or delivery. You can choose one of them based on your need. For example: 24fps for movie and 25fps for TV release (PAL). To set the Project FPS: see the steps on the right.

When the Project fps is 25fps, whatever the CMOS imaging sensor fps is set, clips will be played at 25fps in post-production or in-camera playback. For example: action movies usually choose 22 Sensor fps for shooting, but 25 Project fps for playback, which makes the action seems faster.

The default setting of project fps is 25fps.

Shortcut List

Change Sensor FPS

Press short button [FPS]

Menu Operation

Change Project FPS

[MENU→Shooting→Project FPS]

3.3.2 User-defined CMOS Imaging Sensor FPS

Regular fps, like 24, 25, 30, 48, 50, 96, 200, are available in the FPS Shortcut List; you may also customize other fps in the menu.

You can define three fps to any value between minimum fps (0.2fps) and the max fps of the current resolution w/ accuracy 0.001fps.

- When defining the CMOS imaging sensor FPS to 22fps, there will be a 22fps option in the CMOS imaging sensor shortcut list at any resolutions;

Menu Operation

Custom sensor FPS

[MENU→Shooting→

Custom Sensor FPS]

©2021 Kinefinity Inc.

- When defining the CMOS imaging sensor FPS to 119fps, the 119fps option would not appear at S35 5K DCI resolution, but will appear in the Sensor fps menu at S35 5K Wide resolution.

You can delete the customized Sensor fps by modifying it to 24 fps.

NOTICE When shoot slow-mo or fast-mo (CMOS Imaging Sensor FPS is different from Project FPS), the audio track will not be packaged into a mov file if the recording codec is ProRes mov, but instead two uncompressed audio files are in the clip folder.

©2021 Kinefinity Inc.

3.4 Custom LUT

The camera supports custom LUT perfectly: from shooting to post-processing. There is one in-camera preset LUT: KC_NeutM. KC_NeutM has more accurate highlights and details in shadow than Kine709 and covers balanced tone with normal saturation and contrast.

You can upload a LUT to the camera, and switch different LUT/Look instantly when monitoring. While recording ProRes with custom LUT; it does not get burned into the footage. You can upload 3rd-party LUT to the camera as many as you want; supporting up to 33x33x33 3D LUT Cube, SCRATCH and DaVinci Resolve can output cube LUT.

3.4.1 Upload Custom LUT

It just needs three simple steps:

1. Export the LUT from DI software and rename it as four English characters, like CAN1.cube;
2. Copy the LUT into the root folder of the USB-C stick as FAT/FAT32;
3. Upload the LUT to the camera: insert the USB stick to the USB-C port, and then load the Custom LUT with the menu. The process only takes one second.

Menu Operation

Load Custom LUT

[MENU→Setting→ Load Custom LUT]

Reboot the camera, and the new LUT will be shown in the LUT shortcut list by pressing the shortcut button [1].

NOTICE The LUT will be overwritten when the name is same, and there should be no blank in the name and not more than four characters.

3.4.2 Erase Custom LUT

Menu Operation

Erase custom LUT

[MENU→Setting → Clean Custom LUT]

Erasing the uploaded custom LUT is also intuitive,

[MENU→LUT→Clean Custom LUT]

Then all custom LUT will be deleted in a second, only with native KC_NeutM remained.

©2021 Kinefinity Inc.

3.5 Firmware Update

Kinefinity always optimizes the current features and adds new functions to the cameras by firmware update. Users can download the latest firmware from Kinefinity website to get their cameras updated.

Menu Operation

Update Firmware

[MENU→System→Update Firmware]

The firmware version is shown at the bottom of MENU, for example, firmware: KineOS V7.0(00), means the KineOS version is 7.0 with a building number of 7000. To upgrade the firmware as the following steps:

1. **Download**: Download and copy the latest firmware to the root folder of a FAT32 USB disk; insert the USB-C disk into the USB-C socket of the camera;
2. **Update**: Choose Update Firmware in the System menu, and then confirm to updade. When the successful message appears on the display, it means the update is completed (approx. 30 mins);
3. **Reboot**: Power down the camera, and remove the USB-C disk. Repower the camera, then the new firmware will take effect.

Downgrading the firmware to the previous version is also available to perform, which is identical to the steps of firmware update.

CAUTION Do NOT take any other operation and never lose power firmware update, else it may lead to failure of the update, and the camera has to be sent to Kinefinity for repair, or you can to update the firmware under calibration mode, please refer to 3.6.2.

CAUTION Remove any lenses before updating the firmware.

NOTICE Before updating the firmware, the user settings can be exported from the camera. After the update is done, the user settings can be imported to the camera by:

[MENU→System→Export/Import User Settings]

©2021 Kinefinity Inc.

3.6 Calibration Mode

The camera can conduct the operations like black balancing, downgrading the firmware under this mode. Please reboot the camera after the foregoing operations are done.

3.6.1 Black Balancing

Every Kine camera has been calibrated in black balancing under Calibration Mode before shipping. After a long period of usage, please do the balancing again, and then reset to the factory. Factory reset would not change the balancing data. Please do as following:

1. **Enter into Calibration Mode:** hold the [MENU] button for three seconds while turn on the camera, then release the [MENU] button;
2. **Calibration:** put on the lens cover or mount cover to make sure a total black display, then choose [Black Balancing] in the menu, and wait about 5 mins until the cablibration is done;
3. **Factory Reset:** by [MENU→System→ Factory Reset], then reboot the camera.

Menu Operation

Black Balancing

[MENU→System→ Black Balancing]

NOTICE After black balancing, there is no dead pixel in the normal ISO range, but there might be a few red/green/blue spots when ISO is extremely high.

NOTICE If there are white dots in some frames, it may be due to the cosmic rays, not the malfunction of the CMOS imaging sensor.

3.6.2 Update/Downgrade the Firmware

If the camera is powered down during the firmware update, it may be not powered on because of damaged system. Please try to turn on the camera under Calibration Mode before send it to factory:

1. **Enter the Calibration Mode:** hold the MENU button when press and release power button, after three seconds, release the [MENU] button;

2. **Update:** In the System menu, select Update Firmware, and then confirm to update. When the successful message appears on the display, it means the update is completed (approx. 30 mins);

3. **Reboot:** Power down the camera, and remove USB flash drive. Power on the camera, and then the new firmware takes effect.

Menu Operation

Update Firmware

[MENU→System→Update Firmware]

NOTICE After the update is done, please perform the factory reset.

©2021 Kinefinity Inc.

3.7 TimeCode and SYNC

Timecode is one of the key features of cinema camera. The camera shows time code in Live View and Playback state. Timecode is written into recorded clips. For ProRes, the mov file contains a single timecode track.

The camera enables three types of timecodes:

- **Free run:** timecode runs all the time, no matter you are recording or not. The timecode is embedded into recorded clips;
- **Record run:** timecode runs only when recording. We recommend to set timecode to 00: 00: 00: 00 when a new project begins;
- **External TC:** the camera can use timecode from an external device like Ambient NanoLockit as timecode of camera: using a special cable to connect a timecode generator to the TC port, then set timecode source as external in the menu.

To choose or reset the timecode, please follow the operation on the right.

Menu Operation

Set the TimeCode

[MENU→Settings→TimeCode]

3.7.1 TC port and TC cord

The TC port is 0B 5-pin push-pull socket. It is compatible with the ARRI Alexa camera TC port for LTC IN and OUT.

Timecode generator based on Ambient timecode system, such as NanoLockit, is also a 0B 5-pin socket. You can check the TC cord on the Kinefinity official website or contact sales@kinefinity.com.

In addition, the camera can output timecode to other devices: connect the TC input port of the device to the TC output port of the camera by a special TC cord.

NOTICE When the camera is set to external timecode, the Jam TC input mode is not supported.

Port Definition

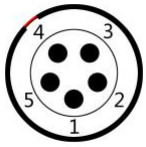

1. GND
2. LTC IN

3,4. NC

5. LTC OUT

©2021 Kinefinity Inc.

3.7.2 External TC

There are three kinds of frame rates when using external TC: Project FPS, Sensor FPS and External FPS of TC generator. Make sure that the Sensor FPS is an integral multiple of the External FPS.

Timecode on UI will be green if the system is successfully connected. If there is no external timecode feeding into the camera, it will automatically employ the internal timecode of the camera and the indicator shows in yellow. If the timecode blinks in green/red/yellow, you need to check if the following situations exist:

- Improper settings on the frame rates
- Poor cable connection;
- Power loss of external timecode device;
- Special settings needed for the timecode device. For example, NanoLockit TC output needs to be activated manually.

3.7.3 Beeper and SYNC

The beeper has two usages:

- It makes a tone of 1KHz and 2KHz respectively when the camera is triggered on/off record, to give a signal to the crew in the field. You can disable the beeper by the operation on the right.
- The tone of 1KHz and 2KHz at the beginning of the video and end of the video can be recorded when the camera is triggered on/off record, as pilot for post-workflow. Disable the function by the operation on the right.

Menu Operation

Set Beeper

[MENU→SYNC→

Beeper: on/off]

Menu Operation

Set recording of Beeper

[MENU→SYNC→

Recording Beeper: on/off]

©2021 Kinefinity Inc.

3.8 Configure the Camera

You can save these settings to the camera: preset list, body fan speed, EI/ISO mode, shutter mode, etc. When powered on with a USB-C disk, the camera will be restored to factory default.

3.8.1 Preset

In-Camera Presets are a set of parameters for recording and shooting:

Image Format; Resolution; FPS; Shutter Speed; Record Format

Moreover, there are eight in-camera presets, and the camera provides quick switch for these presets: in Live View mode, press and hold the button [1] for one sec to pop up the Preset list.

Besides, these in-camera presets can also be defined and saved. After setting these parameters in Liveview state, you can save a Preset according to the operation on the right. Then the preset you save will be on the list.

Menu Operation

Change Presets

[MENU→Shooting→Save as Preset]

NOTICE User settings can be exported or imported from the camera with the following steps:

[MENU→System→Export/Import User Settings].

©2021 Kinefinity Inc.

3.8.2 Shutter Display Mode

Menu Operation

Change Shutter Display

[MENU→

Liveview→Shutter Mode: Time/Angle]

There are two modes for shutter display: Shutter Speed and Shutter Angle:

[MENU→Liveview→Shutter Mode: Time/Angle]

Calculation between Speed and Angle as following: if Shutter Speed is 1/50s, and fps is 25, the shutter angle is:

25*360*(1/50) = 180 Degree.

The Shutter Angle ranges from 0.7~358 Degree; the Shutter Speed has min value of 1/2000, and the max value depends on the FPS.

Besides, Shutter Speed List does NOT match Shutter Angle List.

NOTICE Set the appropriate shutter speed to avoid flickering: for example, 1/50s, or 172.8 Degree.

3.8.3 Camera Fan and Core Temperature

Menu Operation

Change Fan Speed

[MENU→

Settings→Fan Speed]

Core Temperature is the real-time temperature of the core processor. It is shown on the UI with full parameters so that users can monitor it. When the core temperature reaches up to 75 degrees, the camera will be cooled down automatically by the fan at full speed until the core temperature is down to 70 degrees and under. Meanwhile, the fan speed will return to its normal setting.

You can adjust the fan speed (Default: 40%) from 25% to 100% or even turn off the fan by the operation on the right.

Besides, you can choose to slow down the fan while recording in case there will be less noise; the fan will be turned on automatically when the camera stops recording.

Manu Operation

Stop Fan

[MENU→

Settings→Fan Control: Slow While Recording]

©2021 Kinefinity Inc.

3.8.4 ISO/EI

EI/ISO is a group of settings to capture light on the CMOS imaging sensor. MAVO Edge 8K supports both ISO and EI mode, whose value display at the top of the screen.

ISO Mode

The nominal value of ISO is ISO ASA, which takes effect on the RAW data, applying different gain on the CMOS imaging sensor. The default mode is ISO mode, ISO 640; the highlight level (Highlight means stops from 18% gray to ADC Clip) is 5.0 stops.

Highlight Stops

As the name suggests, more highlight stops means less shadows details but more noise. If you want to retain more highlight details, recommend to set 5.0 stops and above or using EI mode. Changing ISO will not change highlight stop.

The highlight stop is able to change from 4.3 to 7.3 stops in the menu. For different highlight stops, the camera has a minimum ISO value, for example: when the highlight stop is 4.6, minimum ISO is 200; while for 5.0 stops, minimum ISO is 250.

Menu Operation

Set Highlight

[MENU→Shooting→ISO Highlight Stops]

EI Mode

The nominal EI value is similar to the settings in Alexa or RED cameras. The highlight stop follows the change of EI value, but image brightness adjusted by digital gain while analog gain of the CMOS imaging sensor remains unchanged.

Changing EI will change highlight stop and image brightness, while sensitivity and dynamic range are unchanged. The highlight of EI 640 is 6.3 stops and EI 800 is 6.6 stops. You can switch between EI/ISO by the operation on the right.

Menu Operation

Change Sensitivity Mode

[MENU→Shooting→ Sensitivity Mode]

Difference between ISO and EI mode:

In ISO mode, changing the ISO value means using analog gain on the camera, which changes the sensitivity of CMOS imaging sensor, but the highlight stop remains unchanged.

In EI mode, changing the EI value doesn't change the sensitivity of the CMOS imaging sensor, but using digital gain on the camera changes highlight as a result.

NOTICE In Live View, 18% gray matches EI value to maintain the same brightness for shooting and post work.

NOTICE Recommend shooting in ISO mode if you don't fully understand the EI and ISO.

Dual ISO

MAVO LF supports Dual Native ISO: 640/2560, allowing it to capture low-noise image with high dynamic range in regular scenes or low-light environment. When highlight level is 5.0, the native ISO from 200 to 640 is 640, and from 800 to higher is 2560. For EI mode, the native EI from 160 to 1280 is 640, and from 1280 to higher ISO is 2560.

©2021 Kinefinity Inc.

3.9 Anamorphic Recording

Anamorphic was a technical choice for filming, but now it is an aesthetic preference. Echo to more affordable anamorphic lenses, TERRA 4K, MAVO and MAVO LF are also good choices for anamorphic shooting, as the CMOS imaging sensors are all 3:2.

The 36x24mm full frame CMOS imaging sensor of MAVO Edge 8K is like a huge canvas, allowing creators to easily achieve various anamorphic shots on it:

- S35 anamorphic;
- Full frame anamorphic, obtaining a field of view equivalent to 65mm;
- Open Gate: 8192x5288. All pixels of the CMOS imaging sensor are captured, leaving maximum space for post processing.

The camera supports 2x, 1.8x, 1.75x, 1.5x, 1.33x, 1.25x, 0.5x, 0.67x anamorphic shooting, which falls into almost all anamorphic lenses on the market.

When use 2x anamorphic lens:

Format	Resolution	FPS	De-Squeezed
FF 8K 3:2, OG	8192x5288	45	16384x5288
S35 4:3 Ana	4864x3600	60	9728×3600
S35 6:5 Ana	4864x3840	60	9728×3840

Menu Operation

Set Anamorphic Lens

[MENU→Liveview→ Anamorphic Lens]

When shooting at 4:3 with anamorphic lens, you can de-squeeze the images on the monitor into normal image by setting anamorphic lens factor in MENU. For example, when anamorphic lens factor is 2, set the factor in camera to 2, then you can get 2.66:1 instead of normal view of 4:3.

To set the ratio, see the operation on the right.

NOTICE The recorded clips are 4:3 instead of de-squeezed images. The monitoring images depend on the ratio you set. You can see a normal image while monitoring, but the actual clips are still 4:3.

©2021 Kinefinity Inc.

3.10 Kinefinity App Instruction

Kinefinity App which is re-designed thoroughly works with MAVO Edge 8K. The App can tune the shooting parameters or get the status of cinema cameras responsively. The brilliant thing is that the App displays the video stream from cameras in real time with super low latency, if the iOS devices and camera work in stable and good WIFI environment

Preparation before running Kinefinity APP:

1. Make sure a high-gain dual-band internal-pin Wi-Fi antenna is mounted to the camera (The WIFI port is manufactured with internal-pin and internal-bore; the antenna is SMA male pin and female head with 5dBi and supports WIFI frequency band);
2. The cinema camera works as WIFI Client mode, so it needs an external wireless AP (access point), which could be Android or iPhone12 hotspot (do not recommend iPhone 11 or below as hotspot for this application) or wireless router, dual band preferred.

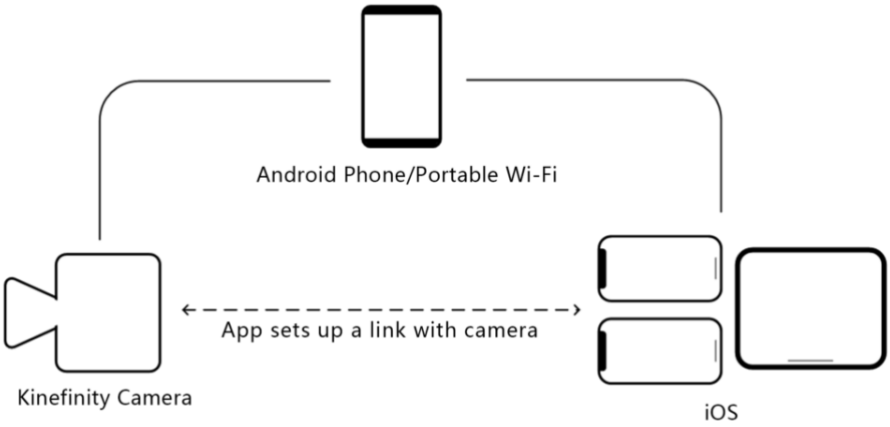

Take Android hotspot and iPad with Kinefinity App as the example:

1. **Set the camera:**

   [MENU→Network→ WIFI: on and Stream: on]

2. **Prepare WIFI QR code:** Generate the code by QR Code Generation website or WIFI hotspot code by Android Phone;
3. **iPad access to WIFI:** Set iPad WIFI or use iOS camera to recognize the WIFI code to access to the WIFI;
4. **Camera access to WIFI by scanning the QR code:**

   [MENU→Network→Connect to Newwork...]

©2021 Kinefinity Inc.

The camera scans the Wi-Fi QR code, obtains the SSID name and password, and connects to the Wi-Fi network; if it is successful, the camera accesses the Wi-Fi network and assigns an IP address;

5. **Set iPad App:** open Kinefinity App, click:

   [Configuration icon on the UI→Set up→Camera Server→IP address]

   Input IP address of the camera, then the App will automatically connect to the camera.

Then you are able to use three mode/pages:

1. **Video mode:** real-time video and key parameters. Users is capable of changing the key parameters by simply touching the UI;
2. **Panel mode:** key parameters only;。
3. **Setup mode:** or menu/configuration mode. Input slate information and project information very easily.

NOTE

1. The performance of camera may be affected if number of active links is over six at the same time;
2. Kinefnity App is available to iPhone with iOS10 or above. But if as WIFI hotspot, strongly recommend iPhone 12;
3. QR code from some Android Phones may not be recognized by the camera. In this way, please generate the code by:

   QR code generation website: https://qifi.org/;

   Operation: fill in the SSID and Key on the website and generate the QR code to use;
4. Kine cameras enables to record same WIFI information, no need to have extra setting in next time boot up;
5. The IP address of the camera depends on the WIFI. As the WIFI changes, the camera IP address will change.

©2021 Kinefinity Inc.

4. TECH & SPEC AND CONNECTORS

4.1 Technical Specifications

4.1.1 MAVO Edge 8K SPEC

The following are typical settings.

Camera Type	Large Format Digital Cinema Camera			
Imaging Sensor	8K 3:2 Full Frame CMOS Imaging Sensor			Active Area: 36x24mm, ø 43.3mm
Lens Mount	Native KineMOUNT as omni mount to be PL/EF/SONY E/ARRI LPL by solid mounting adapters			*PL *EF *SONY E *ARRI LPL
Dual Base ISO	**Dual Base ISO**		**Max**	
	2560 (from 800)	640 (from 800)	20480	
Latitude	>14 stops			
Full Frame	FF 8K DCI	8192x4320, 6~55fps		Active Size: 36x19mm, ø 40.7mm
	FF 8K Wide	8192x3384, 6~70fps		Active Size: 36x15.2mm, ø 39.1mm
	FF 8K HD	7680x4320, 6~55fps		Active Size: 33.8x19mm, ø 38.7mm
	FF 4K OG (oversample)	4096x2644, 6~45fps		Active Size: 36x24mm, ø 43.3mm
	FF 4K DCI (oversample)	4096x2160, 6~55fps		Active Size: 36x19mm, ø 40.7mm
	FF 4K HD (oversample)	3840x2160, 6~55fps		Active Size: 33.8x19mm, ø 38.7mm
S35	S35 6K DCI	6144x3240, 6~72fps		Active Size: 27x14.2mm, ø 30.5mm
	S35 6K Wide	6144x2560, 6~92fps		Active Size: 27x11.3mm, ø 29.3mm
	S35 6K HD	5760x3240, 6~72fps		Active Size: 25.2×14.2mm，ø 29.0mm
	S35 5K DCI	5120x2700, 6~85fps		Active Size: 22.5x11.9mm, ø 25.5mm
	S35 5K Wide	5120x2160, 6~108fps		Active Size: 22.5x9.5mm, ø 24.4mm
	S35 6:5 Ana	4864x3840, 6~60fps		Active Size: 22.5x18mm, ø 28.8mm
	S35 4:3 Ana	4864x3600, 6~60fps		Active Size: 22.5x16.9mm, ø 28.1mm
	S35 4K DCI (oversample)	4096x2160, 6~72fps		Active Size: 27x14.2mm, ø 30.5mm
	S35 4K HD (oversample)	3840x2160, 6~72fps		Active Size: 25.2×14.2mm，ø 29.0mm
Other Cropping	4K DCI	4096x2160, 6~108fps		
	4K Wide	4096x1600, 6~145fps		
	4K HD	3840×2160, 6~108fps		
	4K HD 2.4:1	3840×1600, 6~145fps		
	2K DCI	2048x1080, 6~215fps		
	2K Wide	2048x800, 6~280fps		

©2021 Kinefinity Inc.

Record Codec	**Codec Type**	**Encapsulation Format**	**Bit Depth**	Notes
	ProRes4444XQ	Quicktime mov	12bits	
	ProRes4444	Quicktime mov	12bits	
	ProRes422HQ/422/LT	Quicktime mov	10bits	
Preview File	H264	mp4	8bits	Recording when fps <=30
Shutter Angle	0.7°~358° Rolling Shutter			
Monitoring	Video Port x2	SDI x2		
SYNC	Tally, AutoSlate, Beeper, TC, 3D/Multi-cam Sync			
LUT	Preset: KineLOG3, Neutral(Rec 709), Support Custom 3D LUT			
Audio Capture	In-cam MIC; 3.5mm MIC-IN; 48V Phantom Power Input x2 (regular XLR)			
Record Media	Media Slot x2, for KineMAG Nano SSD based on NVMe M.2 SSD			
Power Source	**Power in**		**Consumption**	
	DC IN (1B2P), 11~26V/Integrated V-mount battery plate		32W	8K 25p under the Liveview, 32W
Body Material	Carbon Fiber with Aluminum Alloy			
Body Weight	3.3lb/1.5kg			*Only camera body
Size	4.1x4.8x4.3"/106x124x109 mm			*W/o projections, WxHxL
Operating Temp	0°C ~ 40°C			

All specifications shown are preliminary and subject to change without notice.

©2021 Kinefinity Inc.

4.1.2 MAVO Edge 8K Frame Rates and FPS

The following chart contains resolution, frame rate and codecs. For the latest complete list, please refer to SPEC of MAVO Edge 8K on the website.

Image Format	Format	Resolution	Max FPS	Codec
FF	FF 8K DCI	8192x4320	55	ProRes
	FF 8K Wide	8192x3384	70	ProRes
	FF 8K HD	7680x4320	55	ProRes
	FF 4K OG (Oversample)	4096x2644	45	ProRes
	FF 4K DCI (Oversample)	4096x2160	55	ProRes
	FF 4K HD (Oversample)	3840x2160	55	ProRes
S35	S35 6K DCI	6144x3240	72	ProRes
	S35 6K Wide	6144x2560	92	ProRes
	S35 6K HD	5760x3240	72	ProRes
	S35 5K DCI	5120x2700	85	ProRes
	S35 5K Wide	5120x2160	108	ProRes
	S35 6:5 Ana	4864x3840	60	ProRes
	S35 4:3 Ana	4864x3600	60	ProRes
	S35 4K DCI (Oversample)	4096x2160	72	ProRes
	S35 4K HD (Oversample)	3840x2160	72	ProRes
Other Cropping	4K Wide	4096x1600	145	ProRes
	4K DCI	4096x2160	108	ProRes
	4K HD	3840×2160	108	ProRes
	4K HD 2.4:1	3840×1600	145	ProRes
	2K DCI	2048x1080	215	ProRes
	2K Wide	2048x800	280	ProRes

NOTICE The oversampling images are sharper and have less noise.

NOTICE Any frame rate can be defined between the minimum fps (0.2fps, with the current firmware) and the maximum CMOS imaging sensor fps of the current resolution, with an accuracy of 0.001fps.

NOTICE ProRes4444XQ is up to 8K 30fps; ProRes4444 is up to 8K 50fps.

©2021 Kinefinity Inc.

4.2 Connectors

MAVO Edge 8K brings multiple ports:

- **Universal ports:** video output (SDI), phantom 48V power input (Standard XLR port), audio input (3.5mm stereo MIC), audio output (3.5mm stereo headphone), USB-C port, power output (D-Tap), GENLOCK port, ETHERNET (RJ45) port.
- **Proprietary ports:** power input (DC IN), LENS port, SYNC port, TC input and output (TC), video output (Video), high speed extension (EXT1&EXT2), bottom UPS power (EXT3), record trigger (RS).

4.2.1 DC IN

DC IN is located at the back right of the camera body, a 1B 2-pin push-pull socket. The recommended input voltage of DC is 11V~26V. Please notice the following for a stable workflow:

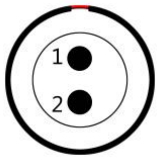

- Max current of external power is 5A;
- Max consumption of camera body is 32W;
- Max consumption of camera body with KineMON-5U is 38W.

#	Definition
1	VDD
2	GND

NOTICE Red dot and groove on the socket should match pin #1.

4.2.2 RS

RS is a 3-pin Fischer push-pull connector for run/stop trigger on MAVO Edge 8K.

- Pin 2: VBAT output is equal to camera body power input (voltage as 11V~26V), max current up to 3A.
- Pin 3: Record on/off input signal, input voltage up to 3.3V.
- Shorten pin #3 and pin #1 can trigger on/off.

#	Definition
1	GND
2	VBAT
3	RS

NOTICE A combined power output of RS connector and VBAT on D-Tap is not over 3A.

NOTICE The input voltage of RS connector cannot exceed 3.3V. Otherwise the camera will be damaged and be sent to the factory.

©2021 Kinefinity Inc.

4.2.3 LENS

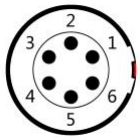

The control port (LENS) is located at the front of the camera body, a 0B 6-pin push-pull socket.

- Pin 1: Record on/off input signal, input voltage up to 3.3V.
- Pin 3 and pin 4: standard voltage of RS232 connector (-15V~+15V).
- Pin 6: VBAT output is equal to camera body power input (voltage as 11V~26V), max current up to 3A.。

#	Definition
1	RS
2	DET
3	RS232 TX
4	RS232 RX
5	GND
6	VBAT

NOTICE The VBAT is only available on compatible accessories. Please confirm with Kinefinity when you use this port or customize third-party accessories.

NOTICE The input voltage of RS connector cannot exceed 3.3V. Otherwise the camera will be damaged and sent to the factory.

4.2.4 SYNC

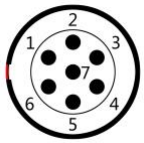

SYNC is a 0B7-pin push-pull socket on MAVO Edge 8K.

- Pin 1 and Pin 7: Voltage range, 0~3.3V.
- Pin 2 and Pin 3: standard voltage of RS232 connector, -15V~+15V.
- Pin 5: Voltage output range, 0~3.3V.

#	Definition
1	CAN_L
2	RS232_RX
3	RS232_TX
4	Reserved
5	TALLY
6	GND
7	CAN_H

提示 The VBAT is only available on compatible accessories. Please confirm with Kinefinity when you use this port or customize third-party accessories.

©2021 Kinefinity Inc.

4.2.5 TC

The TC port is a 0B 5-pin push-pull socket for timecode input or output. For different timecode generators, such as Ambient timecode generator Nano Lockit, or SoundDevice recorder which has a TC system, the physical spec and definition are the same.

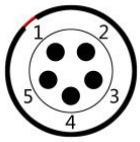

#	Definition
1	NC, unused
2	NC, unused
3	LTC IN
4	GND
5	LTC OUT

©2021 Kinefinity Inc.

4.3 Mechanical Drawings

4.3.1 MAVO Edge 8K Body with KineMOUNT

Front View

Dimensions are shown in mm.

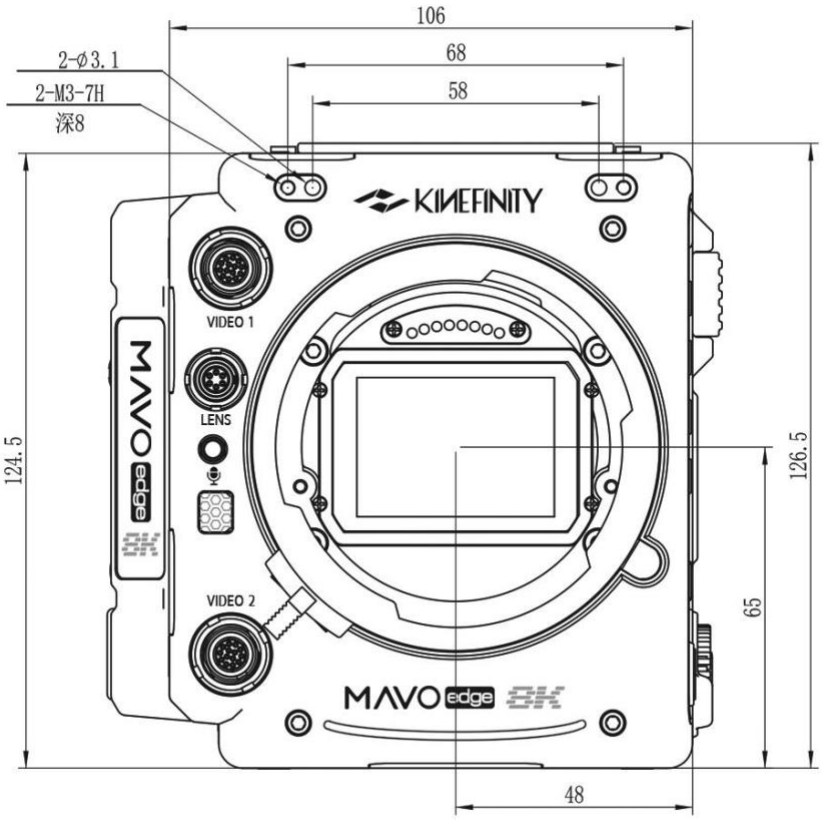

Top View

Dimensions are shown in mm.

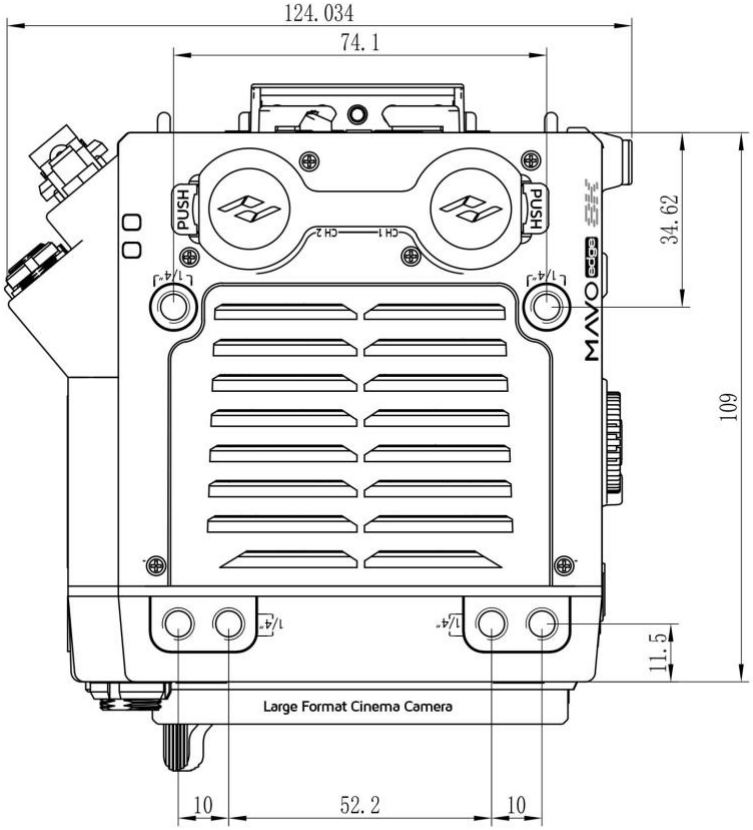

Bottom View

Dimensions are shown in mm.

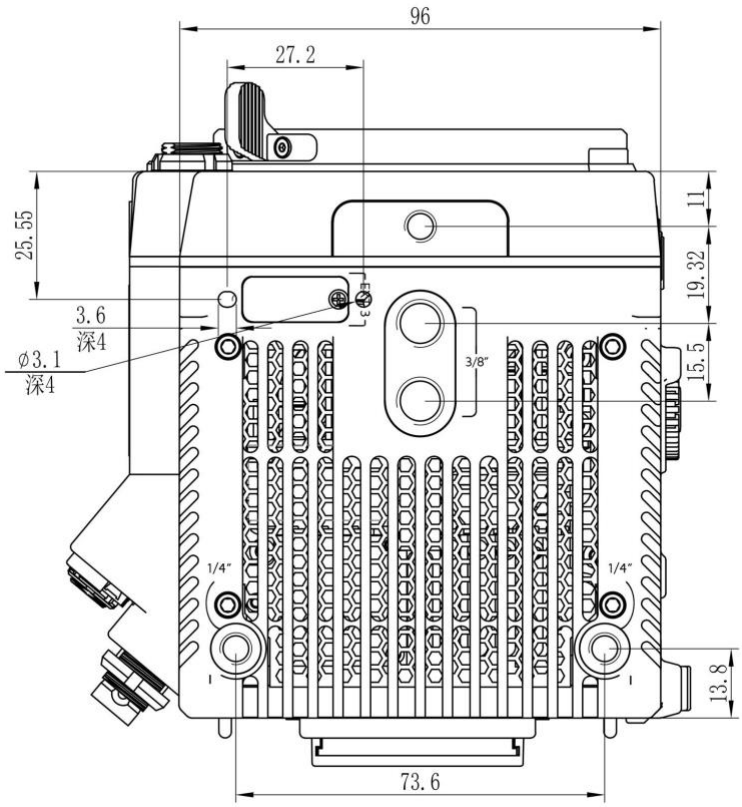

4.3.2 MAVO Edge 8K Body with KineMOUNT and EF 3 Mounting Adapter

Front View

Dimensions are shown in mm.

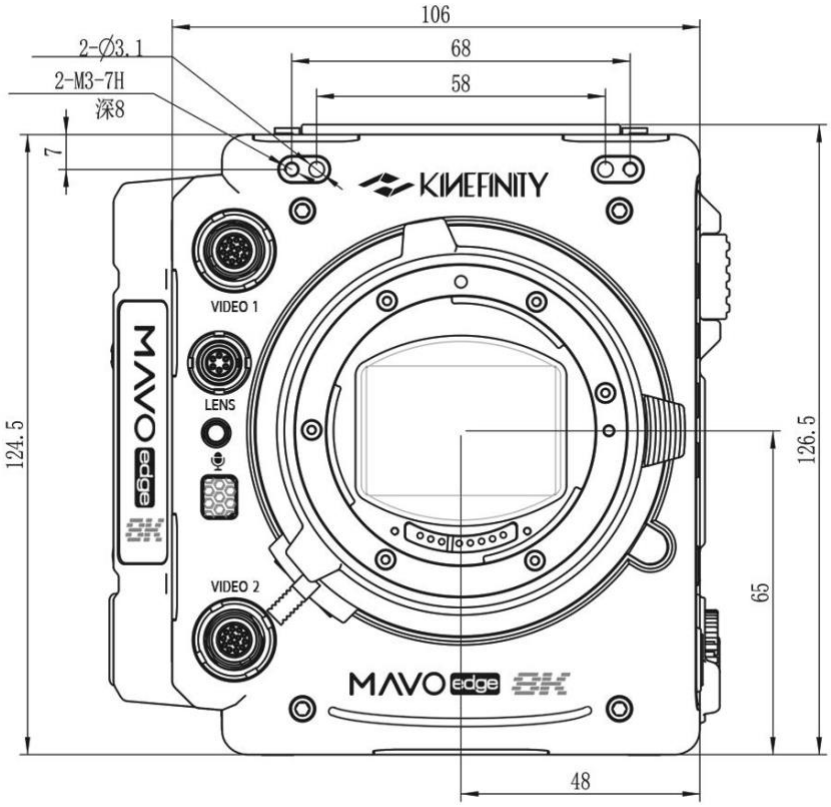

Top View

Dimensions are shown in mm.

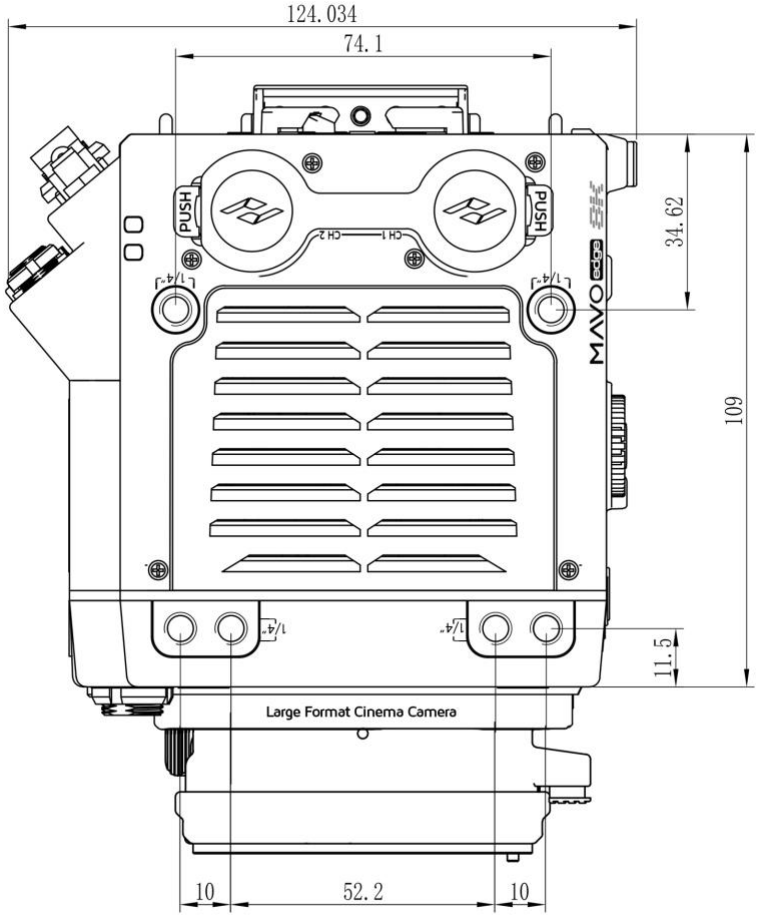

Bottom View

Dimensions are shown in mm.

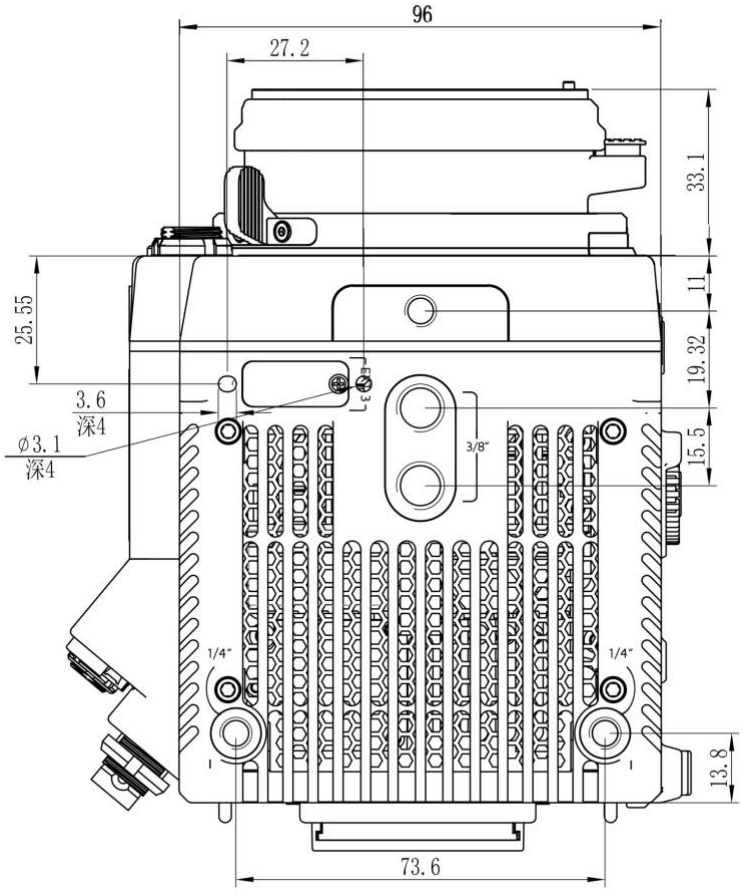

4.3.3 MAVO Edge 8K Body with KineMOUNT and E Mounting Adapter

Front View

Dimensions are shown in mm.

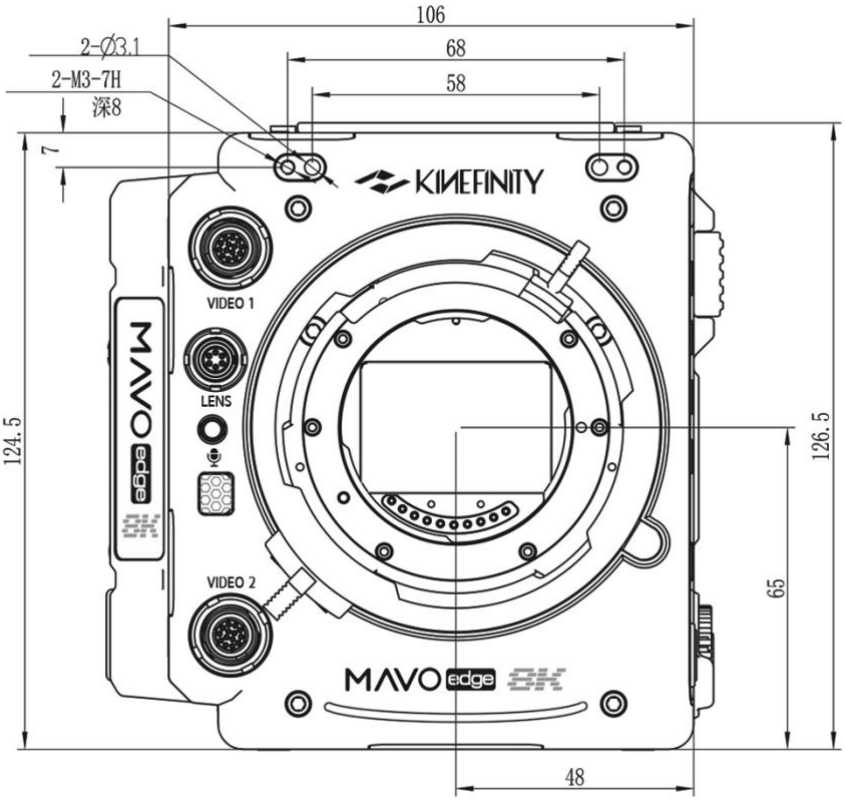

Top View

Dimensions are shown in mm.

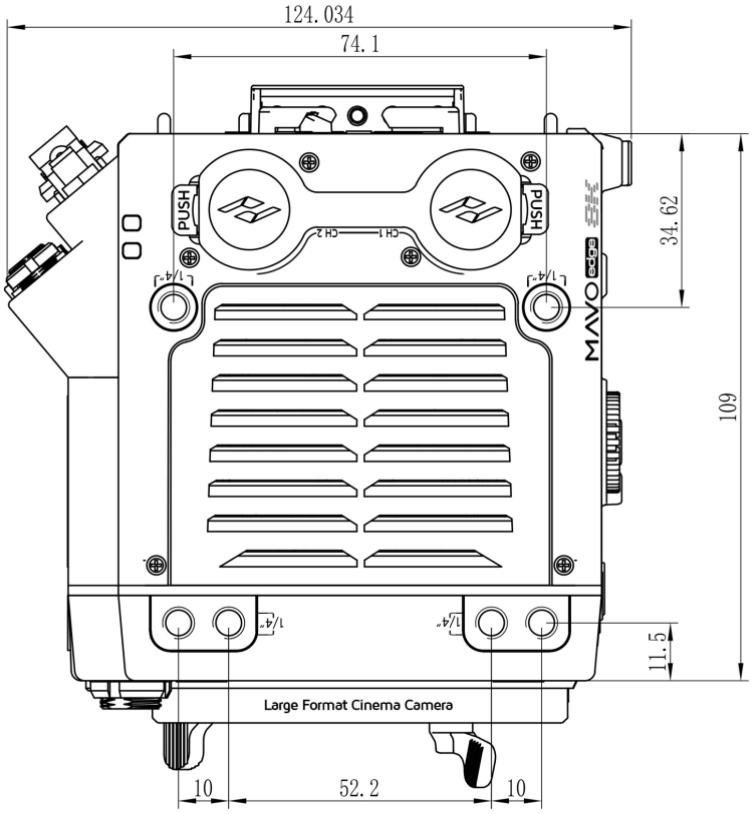

Bottom View

Dimensions are shown in mm.

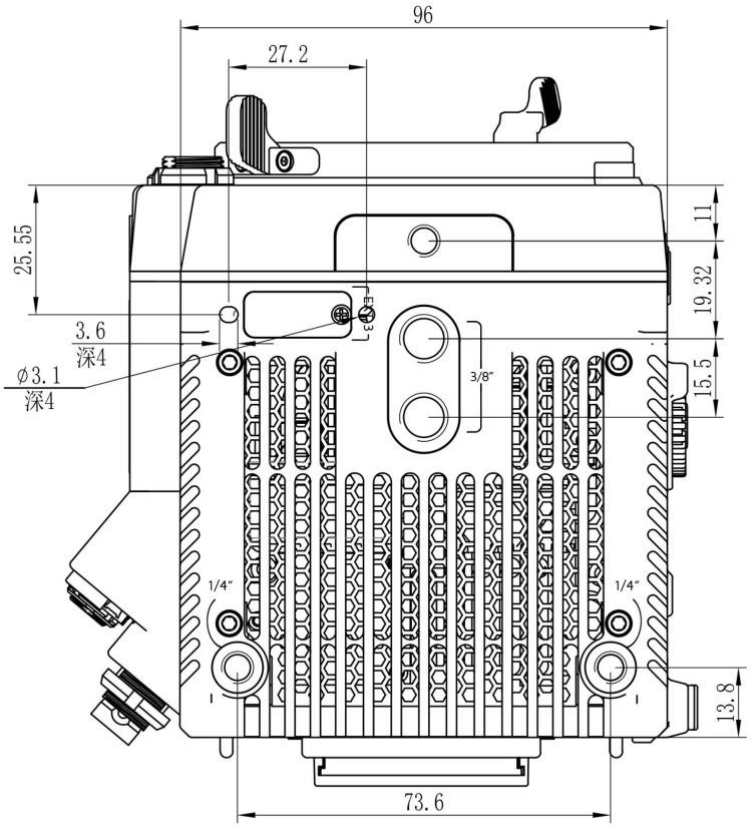

4.3.4 MAVO Edge 8K Body with KineMOUNT and PL Mounting Adapter

Front View

Dimensions are shown in mm.

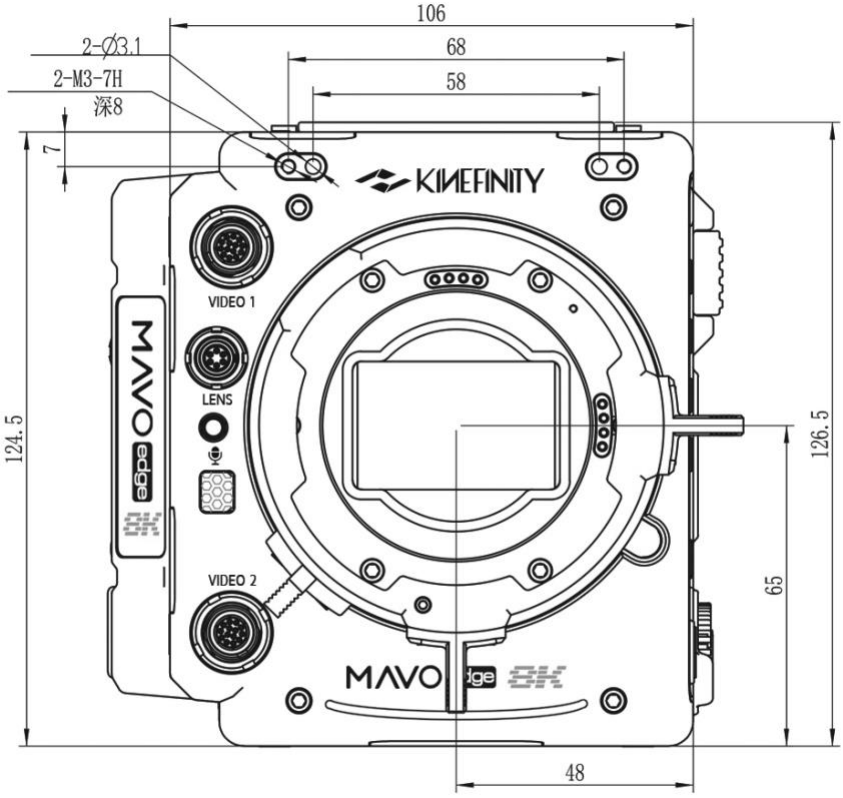

Top View

Dimensions are shown in mm.

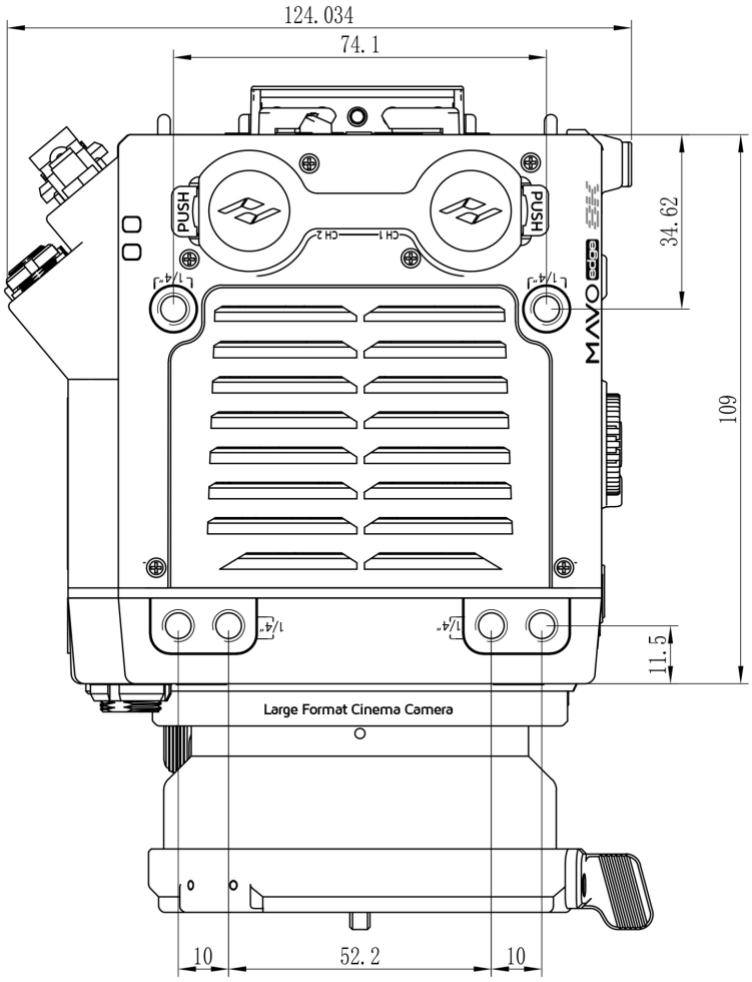

Bottom View

Dimensions are shown in mm.

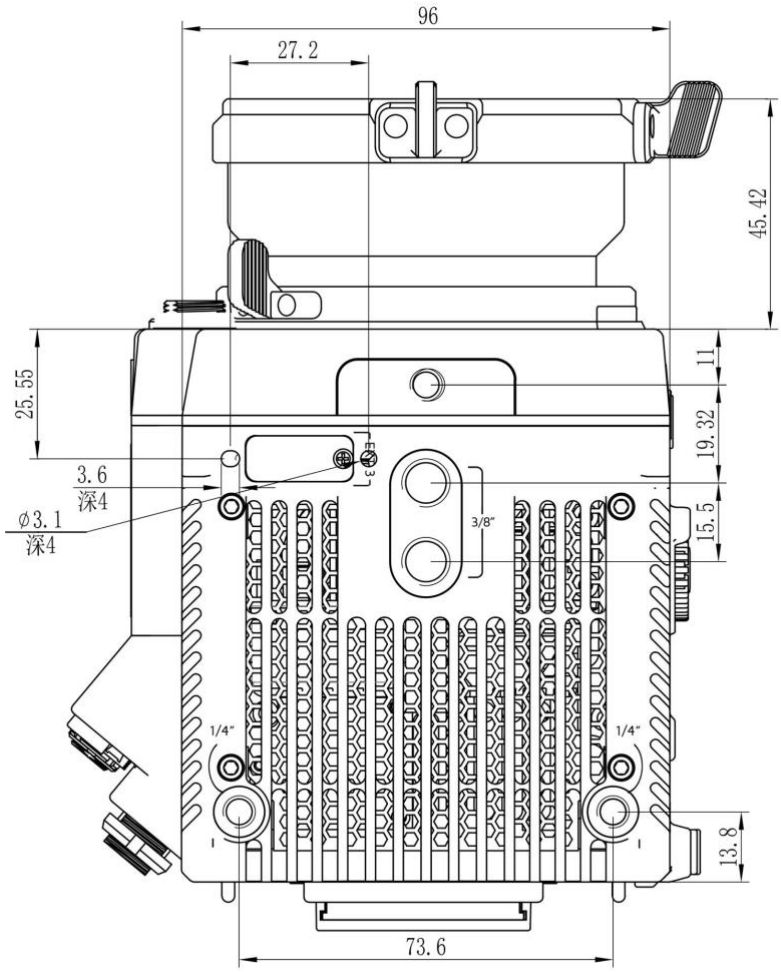

Kinefinity Inc.

www.kinefinity.com

Address: Bldg #1, Enji West Park, No.1, Fuwailiangjiadian, Haidian District Beijing, 100142, China

Phone: 0086-10-51243411

Email: support@kinefinity.com, sales@kinefinity.com

Copyright 2021 Kinefinity Inc.

ALL SPECIFICATIONS SHOWN ARE PRELIMINARY AND SUBJECT TO CHANGE WITHOUT NOTICE.

MAVO LF™, KineMAG™, KineKIT™ are trademarks of Kinefinity™.

FCC Caution:

This device complies with part 15 of the FCC Rules. Operation is subject to the following two conditions: (1) This device may not cause harmful interference, and (2) this device must accept any interference received, including interference that may cause undesired operation.

Any Changes or modifications not expressly approved by the party responsible for compliance could void the user's authority to operate the equipment.

Note: This equipment has been tested and found to comply with the limits for a Class B digital device, pursuant to part 15 of the FCC Rules. These limits are designed to provide reasonable protection against harmful interference in a residential installation. This equipment generates uses and can radiate radio frequency energy and, if not installed and used in accordance with the instructions, may cause harmful interference to radio communications. However, there is no guarantee that interference will not occur in a particular installation. If this equipment does cause harmful interference to radio or television reception, which can be determined by turning the equipment off and on, the user is encouraged to try to correct the interference by one or more of the following measures:

-Reorient or relocate the receiving antenna.

-Increase the separation between the equipment and receiver.

-Connect the equipment into an outlet on a circuit different from that to which the receiver is connected.

-Consult the dealer or an experienced radio/TV technician for help.

The device has been evaluated to meet general RF exposure requirement. The device can be used in portable exposure condition without restriction.