FCC Radio Test Report

FCC ID: 2AYW8WL21C01

This report concerns: Original Grant

Project No.	:	2101C159
Equipment	:	LTE Wireless Router
Brand Name	:	WiLINQ
Test Model	:	D010U
Series Model	:	N/A
Applicant	:	Acentury Inc.
Address	:	120 West Beaver Creek Road, Unit 13, Richmond Hill, ON Canada, L4B 1L2
Manufacturer	:	Acentury Inc.
Address	:	120 West Beaver Creek Road, Unit 13, Richmond Hill, ON Canada, L4B 1L2
Factory	:	Acentury Inc.
Address	:	120 West Beaver Creek Road, Unit 13, Richmond Hill, ON Canada, L4B 1L2
Date of Receipt	:	Jan. 19, 2021
Date of Test	:	Jan. 19, 2021 ~ Feb. 24, 2021
Issued Date	:	Mar. 12, 2021
Report Version	:	R00
Test Sample	:	Engineering Sample No.: DG2021011916 for conducted, DG2021011917 for radiated.
Standard(s)	:	47 CFR FCC Part 27 Subpart L 47 CFR FCC Part 27 Subpart M 47 CFR FCC Part 2 ANSI/TIA/EIA-603-E-2016 FCC KDB 971168 D01 Power Meas License Digital Systems v03r01

The above equipment has been tested and found compliance with the requirement of the relative standards by BTL Inc.

Vegeta Li

Prepared by : Vegeta Li

Steven Lu

Approved by : Steven Lu

Certificate #5123.02

Add: No.3, Jinshagang 1st Road, Shixia, Dalang Town,Dongguan, Guangdong, China.
Tel: +86-769-8318-3000
Web: www.newbtl.com

Declaration

BTL represents to the client that testing is done in accordance with standard procedures as applicable and that test instruments used has been calibrated with standards traceable to international standard(s) and/or national standard(s).

BTL's reports apply only to the specific samples tested under conditions. It is manufacture's responsibility to ensure that additional production units of this model are manufactured with the identical electrical and mechanical components. **BTL** shall have no liability for any declarations, inferences or generalizations drawn by the client or others from **BTL** issued reports.

The report must not be used by the client to claim product certification, approval, or endorsement by NIST, A2LA, or any agency of the U.S. Government.

This report is the confidential property of the client. As a mutual protection to the clients, the public and ourselves, the test report shall not be reproduced, except in full, without our written approval.

BTL's laboratory quality assurance procedures are in compliance with the **ISO/IEC 17025** requirements, and accredited by the conformity assessment authorities listed in this test report.

BTL is not responsible for the sampling stage, so the results only apply to the sample as received.

The information, data and test plan are provided by manufacturer which may affect the validity of results, so it is manufacturer's responsibility to ensure that the apparatus meets the essential requirements of applied standards and in all the possible configurations as representative of its intended use.

Limitation

For the use of the authority's logo is limited unless the Test Standard(s)/Scope(s)/Item(s) mentioned in this test report is (are) included in the conformity assessment authorities acceptance respective.
Please note that the measurement uncertainty is provided for informational purpose only and is not use in determining the Pass/Fail results.

Table of Contents Page

REPORT ISSUED HISTORY 5

1 . SUMMARY OF TEST RESULTS 6

1.1 TEST FACILITY 7

1.2 MEASUREMENT UNCERTAINTY 7

1.3 TEST ENVIRONMENT CONDITIONS 8

2 . GENERAL INFORMATION 9

2.1 GENERAL DESCRIPTION OF EUT 9

2.2 DESCRIPTION OF TEST MODES 13

2.3 BLOCK DIGRAM SHOWING THECONFIGURATIONOFSYSTEMTESTED 21

2.4 DESCRIPTION OF SUPPORT UNITS 21

3 . TEST RESULT 22

3.1 OUTPUT POWER MEASUREMENT 22

3.1.1 LIMIT 22

3.1.2 TEST PROCEDURE 22

3.1.3 TEST SETUP LAYOUT 22

3.1.4 TEST DEVIATION 22

3.1.5 TEST RESULTS 22

3.2 OCCUPIED BANDWIDTH MEASUREMENT 23

3.2.1 TEST PROCEDURE 23

3.2.2 TEST SETUP LAYOUT 23

3.2.3 TEST DEVIATION 23

3.2.4 TEST RESULTS 23

3.3 CONDUCTED SPURIOUS EMISSIONS MEASUREMENT 24

3.3.1 LIMIT 24

3.3.2 TEST PROCEDURES 24

3.3.3 TEST SETUP LAYOUT 24

3.3.4 TEST DEVIATION 24

3.3.5 TEST RESULTS 24

3.4 RADIATED SPURIOUS EMISSIONS MEASUREMENT 25

3.4.1 LIMIT 25

3.4.2 TEST PROCEDURES 25

3.4.3 TEST SETUP LAYOUT 26

3.4.4 TEST RESULTS (9KHZ TO 30MHZ) 27

3.4.5 TEST RESULTS (30MHZ TO 1000MHZ) 27

3.4.6 TEST RESULTS (ABOVE 1000MHZ) 27

3.5 BAND EDGE MEASUREMENT 28

3.5.1 LIMIT 28

3.5.2 TEST PROCEDURES 28

3.5.3 TEST SETUP LAYOUT 28

Table of Contents Page

3.5.4 TEST DEVIATION 28
3.5.5 TEST RESULTS 28
3.6 PEAK TO AVERAGE RATIO MEASUREMENT 29
3.6.1 LIMIT 29
3.6.2 TEST PROCEDURES 29
3.6.3 TEST SETUP LAYOUT 29
3.6.4 TEST DEVIATION 29
3.6.5 TEST RESULTS 29
3.7 FREQUENCY STABILITY MEASUREMENT 30
3.7.1 LIMIT 30
3.7.2 TEST PROCEDURES 30
3.7.3 TEST SETUP LAYOUT 30
3.7.4 TEST DEVIATION 30
3.7.5 TEST RESULTS 30
4. LIST OF MEASUREMENT EQUIPMENTS 31
5. EUT TEST PHOTO 33
APPENDIX A - OUTPUT POWER 36
APPENDIX B - OCCUPIED BANDWIDTH 65
APPENDIX C - CONDUCTED SPURIOUS EMISSIONS 146
APPENDIX D - RADIATED SPURIOUS EMISSIONS (9KHZ TO 30MHZ) 164
APPENDIX E - RADIATED SPURIOUS EMISSIONS (30MHZ TO 1GHZ) 169
APPENDIX F - RADIATED SPURIOUS EMISSIONS (ABOVE 1GHZ) 204
APPENDIX G - BAND EDGE 239
APPENDIX H - PEAK TO AVERAGE RATIO 267
APPENDIX I - FREQUENCY STABILITY 322

REPORT ISSUED HISTORY

Report Version	Description	Issued Date
R00	Original Issue.	Mar. 12, 2021

1. SUMMARY OF TEST RESULTS

Test procedures according to the technical standard(s):

FCC Part 27 Subpart L, M & Part 2			
Standard(s) Section	**Test Item**	**Judgment**	**Remark**
2.1046 27.50(d)(4) 27.50(h)(2)	Equivalent Isotropic Radiated Power	PASS	------
2.1049	Occupied Bandwidth	PASS	------
2.1051 27.53(h) 27.53(m)(4)	Conducted Spurious Emissions	PASS	------
2.1053 27.53(h) 27.53(m)(4)	Radiated Spurious Emissions	PASS	------
2.1051 27.53(h) 27.53(m)(4)	Band Edge Measurements	PASS	------
-	Peak To Average Ratio	PASS	Record Only
2.1055 27.54	Frequency Stability	PASS	------

Note:

(1) “N/A” denotes test is not applicable in this test report.

1.1 TEST FACILITY

The test facilities used to collect the test data in this report is at the location of No.3, Jinshagang 1st Road, Shixia, Dalang Town, Dongguan, Guangdong, China.
BTL's Test Firm Registration Number for FCC: 357015
BTL's Designation Number for FCC: CN1240

1.2 MEASUREMENT UNCERTAINTY

The measurement uncertainty figures shall be calculated according the methods described in the ETSI TR 100 028 and shall correspond to an expansion factor (coverage factor) k=1.96 or k=2(which provide confidence levels of respectively 90% and 95.45% in the case where the distributions characterizing the actual measurement uncertainties are normal (Gaussian)).
Measurement Uncertainty for a Level of Confidence of 95 %, U=2xUc(y).

The BTL measurement uncertainty as below table:

A. Radiated Measurement :

Test Site	Method	Measurement Frequency Range	Ant. H / V	U,(dB)
DG-CB03 (3m)	CISPR	9KHz ~ 30MHz	V	3.79
		9KHz ~ 30MHz	H	3.57
		30MHz ~ 200MHz	V	4.88
		30MHz ~ 200MHz	H	4.14
		200MHz ~ 1,000MHz	V	4.62
		200MHz ~ 1,000MHz	H	4.80

Test Site	Method	Measurement Frequency Range	U,(dB)
DG-CB03 (3m)	CISPR	1GHz ~ 6GHz	4.58
		6GHz ~ 18GHz	5.18

B. Other Measurement:

Parameter	Uncertainty
Spectrum Bandwidth	±3.8 %
Maximum Output Power	±0.95 dB
Power Spectral Density	±0.86 dB
Frequency Stability	±0.16 dB
Temperature	±0.08 °C
Time	±0.58 %
Supply voltages	±0.3 %

Note: Unless specifically mentioned, the uncertainty of measurement has not been taken into account to declare the compliance or non-compliance to the specification.

1.3 TEST ENVIRONMENT CONDITIONS

Test Item	Temperature	Humidity	Test Voltage	Tested By
Output Power & ERP	22°C	47%	AC 120V/60Hz	Tate Liu
Occupied Bandwidth	22°C	47%	AC 120V/60Hz	Tate Liu
Conducted Spurious Emissions	22°C	47%	AC 120V/60Hz	Tate Liu
Radiated Spurious Emissions	26°C	52%	AC 120V/60Hz	Grani Zhou
Band Edge	22°C	47%	AC 120V/60Hz	Tate Liu
Peak to Average Ratio	22°C	47%	AC 120V/60Hz	Tate Liu
Frequency Stability	Normal & **Extreme**	47%	Normal & **Extreme**	Tate Liu

2. GENERAL INFORMATION

2.1 GENERAL DESCRIPTION OF EUT

Equipment	LTE Wireless Router				
Brand Name	WiLINQ				
Test Model	D010U				
Series Model	N/A				
Model Difference(s)	N/A				
Hardware Version	TZ7.821.181				
Software Version	V1.0				
Power Source	1# DC Voltage supplied from AC adapter. Model: DCT24W120200US-A0 2# Supplied from battery. Model: Z2000				
Power Rating	1# I/P: 100-240V~ 50/60Hz 0.7A max O/P: 12V ⎓ 2.0A 2# 7.4V/ 2000mAh 14.8Wh				
IEMI No.	Radiated	866545040010941			
	Conducted	866545040010842			
Modulation Type	WCDMA/HSDPA/HSUPA		UL: QPSK DL: QPSK, 16QAM		
	LTE		UL: QPSK,16QAM, 64QAM DL: QPSK,16QAM, 64QAM		
Max. EIRP	WCDMA Band IV		QPSK	25.65	dBm
	HSDPA Band IV		QPSK	24.38	dBm
	HSUPA Band IV		QPSK	24.37	dBm
	LTE	Channel Bandwidth (MHz)	QPSK (dBm)	16QAM (dBm)	64QAM (dBm)
	Band 4	1.4	25.37	24.67	23.61
		3	25.40	24.48	23.70
		5	25.61	24.65	23.80
		10	25.58	24.62	23.88
		15	26.02	25.21	24.19
		20	26.32	25.63	24.59
	Band 7	5	25.63	25.03	23.80
		10	25.47	24.64	23.70
		15	25.70	24.96	24.04
		20	25.80	25.08	24.28
	Band 41	5	26.30	25.54	24.95
		10	26.33	25.71	24.84
		15	26.73	26.10	25.29
		20	26.88	25.91	25.05
	Band 66	5	25.50	24.94	23.77
		10	25.63	24.93	23.93
		15	26.02	25.42	24.38
		20	26.29	25.80	24.87
Max. ERP	Band 12	1.4	23.63	22.92	22.02
		3	23.71	22.97	22.02
		5	23.87	23.15	22.07
		10	23.62	22.99	21.91
	Band 13	5	23.88	23.26	22.07
		10	23.63	22.64	22.00
	Band 17	5	23.87	23.17	22.10
		10	23.62	22.89	21.94

Note:

1. For a more detailed features description, please refer to the manufacturer's specifications or the user's manual.

2. Channel List:

WCDMA Band IV				
Test Frequency ID	UARFCN	Frequency of Uplink (MHz)	UARFCN	Frequency of Downlink (MHz)
Low Range	1312	1712.4	1537	2112.4
Mid Range	1413	1732.6	1638	2132.6
High Range	1513	1752.6	1738	2152.6

LTE Band 4					
Test Frequency ID	Bandwidth (MHz)	N_{UL}	Frequency of Uplink (MHz)	N_{DL}	Frequency of Downlink (MHz)
Low Range	1.4	19957	1710.7	1957	2110.7
	3	19965	1711.5	1965	2111.5
	5	19975	1712.5	1975	2112.5
	10	20000	1715	2000	2115
	15	20025	1717.5	2025	2117.5
	20	20050	1720	2050	2120
Mid Range	1.4/3/5/10/15/20	20175	1732.5	2175	2132.5
High Range	1.4	20393	1754.3	2393	2154.3
	3	20385	1753.5	2385	2153.5
	5	20375	1752.5	2375	2152.5
	10	20350	1750	2350	2150
	15	20325	1747.5	2325	2147.5
	20	20300	1740	2300	2145

LTE Band 7					
Test Frequency ID	Bandwidth (MHz)	N_{UL}	Frequency of Uplink (MHz)	N_{DL}	Frequency of Downlink (MHz)
Low Range	5	20775	2502.5	2775	2622.5
	10	20800	2505	2800	2625
	15	20825	2507.5	2825	2627.5
	20	20850	2510	2850	2630
Mid Range	5/10/15/20	21100	2535	3100	2655
High Range	5	21425	2567.5	3425	2687.5
	10	21400	2565	3400	2685
	15	21375	2562.5	3375	2682.5
	20	21350	2560	3350	2680

LTE Band 12			
Test Frequency ID	Bandwidth (MHz)	EARFCN	Frequency (UL and DL) (MHz)
Low Range	1.4	23017	699.7
	3	23025	700.5
	5	23035	701.5
	10	23060	704.0
Mid Range	1.4/3/5/10	23095	707.5
High Range	1.4	23173	715.3
	3	23165	714.5
	5	23155	713.5
	10	23130	711.0

LTE Band 13			
Test Frequency ID	Bandwidth (MHz)	EARFCN	Frequency (UL and DL) (MHz)
Low Range	5	23205	779.5
Mid Range	5/10	23230	782.0
High Range	5	23255	784.5

LTE Band 17			
Test Frequency ID	Bandwidth (MHz)	EARFCN	Frequency (UL and DL) (MHz)
Low Range	5	23755	706.5
	10	23780	709
Mid Range	5/10	23790	710
High Range	5	23825	713.5
	10	23800	711

LTE Band 41			
Test Frequency ID	Bandwidth (MHz)	EARFCN	Frequency (UL and DL) (MHz)
Low Range	5	39675	2498.5
	10	39700	2501
	15	39725	2503.5
	20	39750	2506
Mid Range	5/10/15/20	40620	2593
High Range	5	41565	2687.5
	10	41540	2685
	15	41515	2682.5
	20	41490	2680

LTE Band 66					
Test Frequency ID	Bandwidth (MHz)	N_{UL}	Frequency of Uplink (MHz)	N_{DL}	Frequency of Downlink (MHz)
Low Range	5	131997	1712.5	66461	2112.5
	10	132022	1715	66486	2115
	15	132047	1717.5	66511	2117.5
	20	132072	1720	66536	2120
Mid Range	5/10/15/20	132322	1745	66786	2145
High Range	5	132647	1777.5	67111	2177.5
	10	132622	1775	67086	2175
	15	132597	1772.5	67061	2172.5
	20	132572	1770	67036	2170

3. Table for Filed Antenna:

Brand	Model Name	Antenna Type	Connector	Gain (dBi)	Note
N/A	N/A	FPC	N/A	3	WCDMA Band IV
N/A	N/A	FPC	N/A	3	LTE Band 4
N/A	N/A	FPC	N/A	3	LTE Band 7
N/A	N/A	FPC	N/A	3	LTE Band 12
N/A	N/A	FPC	N/A	3	LTE Band 13
N/A	N/A	FPC	N/A	3	LTE Band 17
N/A	N/A	FPC	N/A	3	LTE Band 41
N/A	N/A	FPC	N/A	3	LTE Band 66

Note: The antenna gain is provided by the manufacturer.

2.2 DESCRIPTION OF TEST MODES

Following mode(s) is (were) found to be the worst case(s) and selected for the final test.

WCDMA BAND IV MODE			
Test Item	Available Channel	Tested Channel	Mode
Output Power & EIRP	1312 to 1513	1312, 1413, 1513	WCDMA,HSDPA, HSUPA
Occupied Bandwidth	1312 to 1513	1312, 1413, 1513	WCDMA,HSDPA, HSUPA
Conducted Spurious Emissions	1312 to 1513	1413	WCDMA
Radiated Spurious Emissions	1312 to 1513	1413	WCDMA
Band Edge	1312 to 1513	1312, 1513	WCDMA,HSDPA, HSUPA
Peak to Average Ratio	1312 to 1513	1312, 1413, 1513	WCDMA,HSDPA, HSUPA
Frequency Stability	1312 to 1513	1413	WCDMA

LTE BAND 4 MODE					
Test Item	Available Channel	Tested Channel	Channel Bandwidth	Modulation	Mode
Output Power & EIRP	19957 to 20393	19957, 20175, 20393	1.4MHz	QPSK, 16QAM, 64QAM	1RB/3RB/6RB
	19965 to 20385	19965, 20175, 20385	3MHz	QPSK, 16QAM, 64QAM	1RB/8RB/15RB
	19975 to 20375	19975, 20175, 20375	5MHz	QPSK, 16QAM, 64QAM	1RB/12RB/25RB
	20000 to 20350	20000, 20175, 20350	10MHz	QPSK, 16QAM, 64QAM	1RB/25RB/50RB
	20025 to 20325	20025, 20175, 20325	15MHz	QPSK, 16QAM, 64QAM	1RB/36RB/75RB
	20050 to 20300	20050, 20175, 20300	20MHz	QPSK, 16QAM, 64QAM	1RB/50RB/100RB
Occupied Bandwidth	19957 to 20393	19957, 20175, 20393	1.4MHz	QPSK, 16QAM, 64QAM	6RB
	19965 to 20385	19965, 20175, 20385	3MHz	QPSK, 16QAM, 64QAM	15RB
	19975 to 20375	19975, 20175, 20375	5MHz	QPSK, 16QAM, 64QAM	25RB
	20000 to 20350	20000, 20175, 20350	10MHz	QPSK, 16QAM, 64QAM	50RB
	20025 to 20325	20025, 20175, 20325	15MHz	QPSK, 16QAM, 64QAM	75RB
	20050 to 20300	20050, 20175, 20300	20MHz	QPSK, 16QAM, 64QAM	100RB

LTE BAND 4 MODE					
Test Item	Available Channel	Tested Channel	Channel Bandwidth	Modulation	Mode
Conducted Spurious Emissions	19957 to 20393	20175	1.4MHz	QPSK	1RB
	19975 to 20375	20175	5MHz	QPSK	1RB
	20050 to 20300	20175	20MHz	QPSK	1RB
Radiated Spurious Emissions	19957 to 20393	20175	1.4MHz	QPSK	1RB
	19975 to 20375	20175	5MHz	QPSK	1RB
	20050 to 20300	20175	20MHz	QPSK	1RB
Band Edge	19957 to 20393	19957, 20393	1.4MHz	QPSK	1RB/6RB
	19965 to 20385	19965, 20385	3MHz	QPSK	1RB/15RB
	19975 to 20375	19975, 20375	5MHz	QPSK	1RB/25RB
	20000 to 20350	20000, 20350	10MHz	QPSK	1RB/50RB
	20025 to 20325	20025, 20325	15MHz	QPSK	1RB/75RB
	20050 to 20300	20050, 20300	20MHz	QPSK	1RB/100RB
Peak To Average Ratio	19957 to 20393	19957, 20175, 20393	1.4MHz	QPSK, 16QAM, 64QAM	1RB
	19965 to 20385	19965, 20175, 20385	3MHz	QPSK, 16QAM, 64QAM	1RB
	19975 to 20375	19975, 20175, 20375	5MHz	QPSK, 16QAM, 64QAM	1RB
	20000 to 20350	20000, 20175, 20350	10MHz	QPSK, 16QAM, 64QAM	1RB
	20025 to 20325	20025, 20175, 20325	15MHz	QPSK, 16QAM, 64QAM	1RB
	20050 to 20300	20050, 20175, 20300	20MHz	QPSK, 16QAM, 64QAM	1RB
Frequency Stability	19957 to 20393	20175	1.4MHz	QPSK	1RB
	19965 to 20385	20175	3MHz	QPSK	1RB
	19975 to 20375	20175	5MHz	QPSK	1RB
	20000 to 20350	20175	10MHz	QPSK	1RB
	20025 to 20325	20175	15MHz	QPSK	1RB
	20050 to 20300	20175	20MHz	QPSK	1RB

LTE BAND 7 MODE					
Test Item	Available Channel	Tested Channel	Channel Bandwidth	Modulation	Mode
Output Power & EIRP	20775 to 21425	20775, 21100, 21425	5MHz	QPSK, 16QAM, 64QAM	1RB/12RB/25RB
	20800 to 21400	20800, 21100, 21400	10MHz	QPSK, 16QAM, 64QAM	1RB/25RB/50RB
	20825 to 21375	20825, 21100, 21375	15MHz	QPSK, 16QAM, 64QAM	1RB/36RB/75RB
	20850 to 21350	20850, 21100, 21350	20MHz	QPSK, 16QAM, 64QAM	1RB/50RB/100RB
Occupied Bandwidth	20775 to 21425	20775, 21100, 21425	5MHz	QPSK, 16QAM, 64QAM	25RB
	20800 to 21400	20800, 21100, 21400	10MHz	QPSK, 16QAM, 64QAM	50RB
	20825 to 21375	20825, 21100, 21375	15MHz	QPSK, 16QAM, 64QAM	75RB
	20850 to 21350	20850, 21100, 21350	20MHz	QPSK, 16QAM, 64QAM	100RB
Conducted Spurious Emissions	20775 to 21425	21100	5MHz	QPSK	1RB
	20850 to 21350	21100	20MHz	QPSK	1RB
Radiated Spurious Emissions	20775 to 21425	21100	5MHz	QPSK	1RB
	20850 to 21350	21100	20MHz	QPSK	1RB
Band Edge	20775 to 21425	20775, 21425	5MHz	QPSK	1RB/25RB
	20800 to 21400	20800, 21400	10MHz	QPSK	1RB/50RB
	20825 to 21375	20825, 21375	15MHz	QPSK	1RB/75RB
	20850 to 21350	20850, 21350	20MHz	QPSK	1RB/100RB
Peak To Average Ratio	20775 to 21425	20775, 21100, 21425	5MHz	QPSK, 16QAM, 64QAM	1RB
	20800 to 21400	20800, 21100, 21400	10MHz	QPSK, 16QAM, 64QAM	1RB
	20825 to 21375	20825, 21100, 21375	15MHz	QPSK, 16QAM, 64QAM	1RB
	20850 to 21350	20850, 21100, 21350	20MHz	QPSK, 16QAM, 64QAM	1RB
Frequency Stability	20775 to 21425	21100	5MHz	QPSK	1RB
	20800 to 21400	21100	10MHz	QPSK	1RB
	20825 to 21375	21100	15MHz	QPSK	1RB
	20850 to 21350	21100	20MHz	QPSK	1RB

LTE BAND 12					
Test Item	Available Channel	Tested Channel	Channel Bandwidth	Modulation	Mode
Output Power & ERP	23017 to 23173	23017, 23095, 23173	1.4MHz	QPSK, 16QAM, 64QAM	1RB/3RB/6RB
	23025 to 23165	23025, 23095, 23165	3MHz	QPSK, 16QAM, 64QAM	1RB/8RB/15RB
	23035 to 23155	23035, 23095, 23155	5MHz	QPSK, 16QAM, 64QAM	1RB/12RB/25RB
	23060 to 23130	23060, 23095, 23130	10MHz	QPSK, 16QAM, 64QAM	1RB/25RB/50RB
Frequency Stability	23017 to 23173	23095	1.4MHz	QPSK	1 RB
	23025 to 23165	23095	3MHz	QPSK	1 RB
	23035 to 23155	23095	5MHz	QPSK	1 RB
	23060 to 23130	23095	10MHz	QPSK	1 RB
Occupied Bandwidth	23017 to 23173	23017, 23095, 23173	1.4MHz	QPSK, 16QAM, 64QAM	6RB
	23025 to 23165	23025, 23095, 23165	3MHz	QPSK, 16QAM, 64QAM	15RB
	23035 to 23155	23035, 23095, 23155	5MHz	QPSK, 16QAM, 64QAM	25RB
	23060 to 23130	23060, 23095, 23130	10MHz	QPSK, 16QAM, 64QAM	50RB
Peak to Average Ratio	23017 to 23173	23017, 23095, 23173	1.4MHz	QPSK, 16QAM, 64QAM	1 RB
	23025 to 23165	23025, 23095, 23165	3MHz	QPSK, 16QAM, 64QAM	1 RB
	23035 to 23155	23035, 23095, 23155	5MHz	QPSK, 16QAM, 64QAM	1 RB
	23060 to 23130	23060, 23095, 23130	10MHz	QPSK, 16QAM, 64QAM	1 RB
Band Edge	23017 to 23173	23017,23173	1.4MHz	QPSK	1RB/6RB
	23025 to 23165	23025,23165	3MHz	QPSK	1RB/15RB
	23035 to 23155	23035,23155	5MHz	QPSK	1RB/25RB
	23060 to 23130	23060,23130	10MHz	QPSK	1RB/50RB
Conducted Emission	23017 to 23173	23095	1.4MHz	QPSK	1 RB
	23035 to 23155	23095	5MHz	QPSK	1 RB
	23060 to 23130	23095	10MHz	QPSK	1 RB
Radiated Emission	23017 to 23173	23095	1.4MHz	QPSK	1 RB
	23017 to 23173	23095	5MHz	QPSK	1 RB
	23060 to 23130	23095	10MHz	QPSK	1 RB

LTE BAND 13					
Test Item	Available Channel	Tested Channel	Channel Bandwidth	Modulation	Mode
Output Power & ERP	23205 to 23255	23205, 23230, 23255	5MHz	QPSK, 16QAM, 64QAM	1RB/12RB/25RB
	23230	23230	10MHz	QPSK, 16QAM, 64QAM	1RB/25RB/50RB
Frequency Stability	23205 to 23255	23230	5MHz	QPSK	1 RB
	23230	23230	10MHz	QPSK	1 RB
Occupied Bandwidth	23205 to 23255	23205, 23230, 23255	5MHz	QPSK, 16QAM, 64QAM	25RB
	23230	23230	10MHz	QPSK, 16QAM, 64QAM	50RB
Peak to Average Ratio	23205 to 23255	23205, 23230, 23255	5MHz	QPSK, 16QAM, 64QAM	1 RB
	23230	23230	10MHz	QPSK, 16QAM, 64QAM	1 RB
Band Edge	23205 to 23255	23205, 23255	5MHz	QPSK	1RB/25RB
	23230	23230	10MHz	QPSK	1RB/50RB
Conducted Emission	23205 to 23255	23230	5MHz	QPSK	1 RB
	23230	23230	10MHz	QPSK	1 RB
Radiated Emission	23205 to 23255	23230	5MHz	QPSK	1 RB
	23230	23230	10MHz	QPSK	1 RB

LTE BAND 17 MODE					
Test Item	Available Channel	Tested Channel	Channel Bandwidth	Modulation	Mode
Output Power & ERP	23755 to 23825	23755, 23790, 23825	5MHz	QPSK, 16QAM, 64QAM	1RB/12RB/25RB
	23780 to 23800	23780, 23790, 23800	10MHz	QPSK, 16QAM, 64QAM	1RB/25RB/50RB
Occupied Bandwidth	23755 to 23825	23755, 23790, 23825	5MHz	QPSK, 16QAM, 64QAM	25RB
	23780 to 23800	23780, 23790, 23800	10MHz	QPSK, 16QAM, 64QAM	50RB
Conducted Spurious Emissions	23755 to 23825	23790	5MHz	QPSK	1RB
	23780 to 23800	23790	20MHz	QPSK	1RB
Radiated Spurious Emissions	23755 to 23825	23790	5MHz	QPSK	1RB
	23780 to 23800	23790	20MHz	QPSK	1RB
Band Edge	23755 to 23825	23755, 23825	5MHz	QPSK	1RB/25RB
	23780 to 23800	23780, 23800	10MHz	QPSK	1RB/50RB
Peak to Average Ratio	23755 to 23825	23755, 23790, 23825	5MHz	QPSK, 16QAM, 64QAM	1RB
	23780 to 23800	23780, 23790, 23800	10MHz	QPSK, 16QAM, 64QAM	1RB
Frequency Stability	23755 to 23825	23790	5MHz	QPSK	1RB
	23780 to 23800	23790	10MHz	QPSK	1RB

LTE BAND 41 MODE					
Test Item	Available Channel	Tested Channel	Channel Bandwidth	Modulation	Mode
Output Power & EIRP	39675 to 41565	39675, 40620, 41565	5MHz	QPSK, 16QAM, 64QAM	1RB/12RB/25RB
	39700 to 41540	39700, 40620, 41540	10MHz	QPSK, 16QAM, 64QAM	1RB/25RB/50RB
	39725 to 41515	39725, 40620, 41545	15MHz	QPSK, 16QAM, 64QAM	1RB/36RB/75RB
	39750 to 41490	39750, 40620, 41490	20MHz	QPSK, 16QAM, 64QAM	1RB/50RB/100RB
Occupied Bandwidth	39675 to 41565	39675, 40620, 41565	5MHz	QPSK, 16QAM, 64QAM	25RB
	39700 to 41540	39700, 40620, 41540	10MHz	QPSK, 16QAM, 64QAM	50RB
	39725 to 41515	39725, 40620, 41545	15MHz	QPSK, 16QAM, 64QAM	75RB
	39750 to 41490	39750, 40620, 41490	20MHz	QPSK, 16QAM, 64QAM	100RB
Conducted Spurious Emissions	39675 to 41565	40620	5MHz	QPSK	1RB
	39750 to 41490	40620	20MHz	QPSK	1RB
Radiated Spurious Emissions	39675 to 41565	40620	5MHz	QPSK	1RB
	39750 to 41490	40620	20MHz	QPSK	1RB
Band Edge	39675 to 41565	39675, 41565	5MHz	QPSK	1RB/25RB
	40090 to 41540	40090, 41540	10MHz	QPSK	1RB/50RB
	39725 to 41515	39725, 41545	15MHz	QPSK	1RB/75RB
	39750 to 41490	39750, 41490	20MHz	QPSK	1RB/100RB
Peak to Average Ratio	39675 to 41565	39675, 40620, 41565	5MHz	QPSK, 16QAM, 64QAM	1RB
	40090 to 41540	40090, 40620, 41540	10MHz	QPSK, 16QAM, 64QAM	1RB
	39725 to 41515	39725, 40620, 41545	15MHz	QPSK, 16QAM, 64QAM	1RB
	39750 to 41490	39750, 40620, 41490	20MHz	QPSK, 16QAM, 64QAM	1RB
Frequency Stability	39675 to 41565	40620	5MHz	QPSK	1RB
	40090 to 41540	40620	10MHz	QPSK	1RB
	39725 to 41515	40620	15MHz	QPSK	1RB
	39750 to 41490	40620	20MHz	QPSK	1RB

LTE BAND 66 MODE					
Test Item	Available Channel	Tested Channel	Channel Bandwidth	Modulation	Mode
Output Power & EIRP	131997 to 132647	131997, 132322, 132647	5MHz	QPSK, 16QAM, 64QAM	1RB/12RB/25RB
	132022 to 132622	132022, 132322, 132622	10MHz	QPSK, 16QAM, 64QAM	1RB/25RB/50RB
	132047 to 132597	132047, 132322, 132597	15MHz	QPSK, 16QAM, 64QAM	1RB/36RB/75RB
	132072 to 132572	132072, 132322, 132572	20MHz	QPSK, 16QAM, 64QAM	1RB/50RB/100RB
Occupied Bandwidth	131997 to 132647	131997, 132322, 132647	5MHz	QPSK, 16QAM, 64QAM	25RB
	132022 to 132622	132022, 132322, 132622	10MHz	QPSK, 16QAM, 64QAM	50RB
	132047 to 132597	132047, 132322, 132597	15MHz	QPSK, 16QAM, 64QAM	75 RB
	132072 to 132572	132072, 132322, 132572	20MHz	QPSK, 16QAM, 64QAM	100RB
Conducted Spurious Emissions	131997 to 132647	132322	5MHz	QPSK	1RB
	132072 to 132572	132322	20MHz	QPSK	1RB
Radiated Spurious Emissions	131997 to 132647	132322	5MHz	QPSK	1RB
	132072 to 132572	132322	20MHz	QPSK	1RB
Band Edge	131997 to 132647	131997, 132647	5MHz	QPSK	1RB/25RB
	132022 to 132622	132022, 132622	10MHz	QPSK	1RB/50RB
	132047 to 132597	132047, 132597	15MHz	QPSK	1RB/75RB
	132072 to 132572	132072, 132572	20MHz	QPSK	1RB/100RB
Peak to Average Ratio	131997 to 132647	131997, 132322, 132647	5MHz	QPSK, 16QAM, 64QAM	1RB/12RB/25RB
	132022 to 132622	132022, 132322, 132622	10MHz	QPSK, 16QAM, 64QAM	1RB/25RB/50RB
	132047 to 132597	132047, 132322, 132597	15MHz	QPSK, 16QAM, 64QAM	1RB/36RB/75RB
	132072 to 132572	132072, 132322, 132572	20MHz	QPSK, 16QAM, 64QAM	1RB/50RB/100RB
Frequency Stability	131997 to 132647	132322	5MHz	QPSK	1RB
	132022 to 132622	132322	10MHz	QPSK	1RB
	132047 to 132597	132322	15MHz	QPSK	1RB
	132072 to 132572	132322	20MHz	QPSK	1RB

2.3 BLOCK DIGRAM SHOWING THECONFIGURATIONOFSYSTEMTESTED

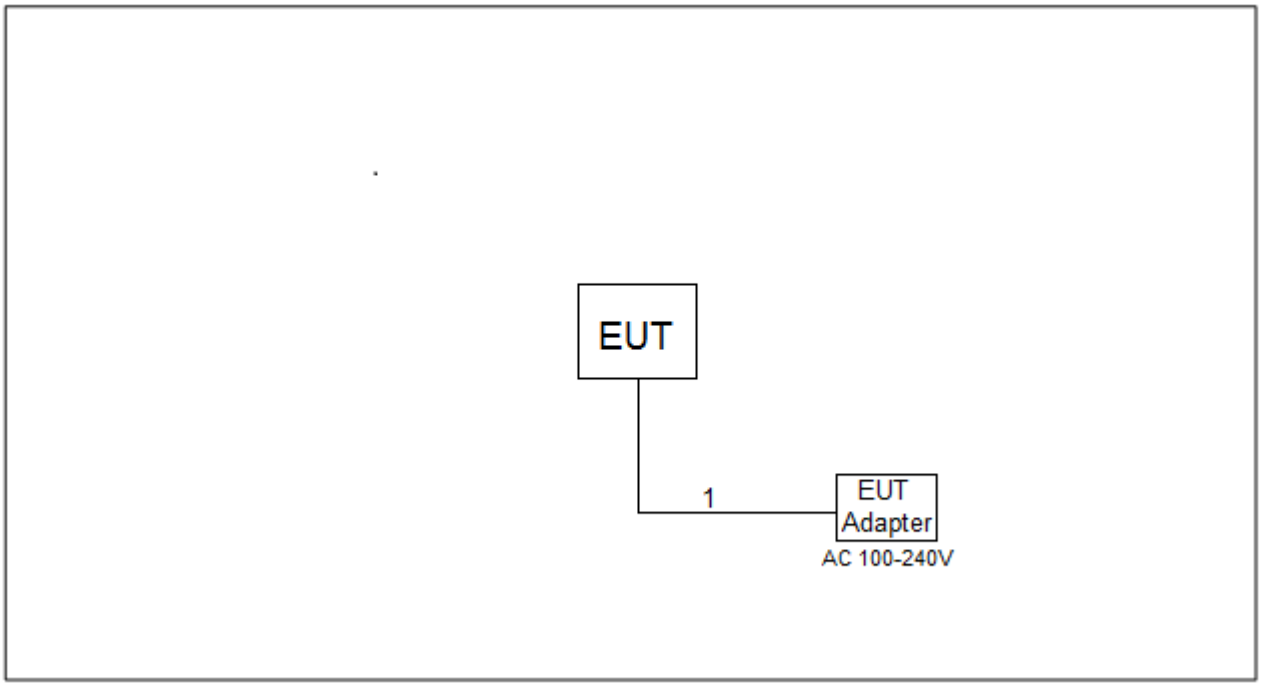

2.4 DESCRIPTION OF SUPPORT UNITS

The EUT has been tested as an independent unit together with other necessary accessories or support units. The following support units or accessories were used to form a representative test configuration during the tests.

Item	Equipment	Mfr/Brand	Model/Type No.	Series No.
-	-	-	-	-

Item	Cable Type	Shielded Type	Ferrite Core	Length
1	DC Cable	NO	NO	1.5m

3. TEST RESULT

3.1 OUTPUT POWER MEASUREMENT

3.1.1 LIMIT

Mobile / Portable station are limited to 1 watts e.i.r.p. (Part 27 Subpart L)
Mobile / Portable station are limited to 2 watts e.i.r.p. (Part 27 Subpart M)

3.1.2 TEST PROCEDURE

The testing follows FCC KDB 971168 v03r01 Section 5.

EIRP:

EIRP = Output Power + Antenan gain

Output Power:

The EUT was set up for the maximum power with WCDMA and LTE link data modulation and link up with simulator. Set the EUT to transmit under low, middle and high channel and record the power level shown on simulator.

3.1.3 TEST SETUP LAYOUT

Output Power Measurement

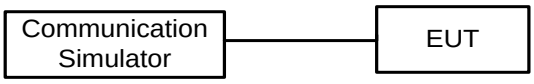

3.1.4 TEST DEVIATION

No deviation

3.1.5 TEST RESULTS

Please refer to the APPENDIX A.

3.2 OCCUPIED BANDWIDTH MEASUREMENT

3.2.1 TEST PROCEDURE

The testing follows FCC KDB 971168 v03r01 Section 4.

1. The EUT makes a call to the communication simulator. All measurements were done at low, middle and high operational frequency range. The communication simulator station system controlled a EUT to export maximum output power under transmission mode and specific channel frequency. Use OBW measurement function of Spectrum analyzer to measure 99 % occupied bandwidth and 26dB bandwidth.
2. The EUT was connected to spectrum analyzer and system simulator via a power divider.
3. RBW=(1% ~ 5%)*EBW
   VBW⩾3* RBW
4. Set spectrum analyzer with Peak detector.

3.2.2 TEST SETUP LAYOUT

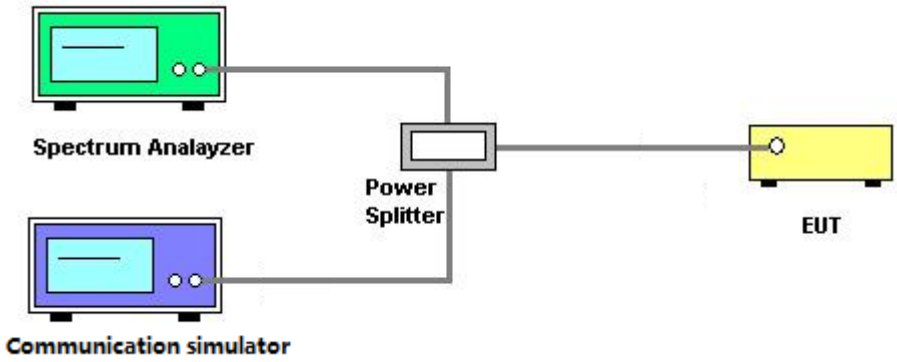

3.2.3 TEST DEVIATION

No deviation

3.2.4 TEST RESULTS

Please refer to the APPENDIX B.

3.3 CONDUCTED SPURIOUS EMISSIONS MEASUREMENT

3.3.1 LIMIT

The power of any emission outside of the authorized operating frequency ranges must be attenuated below the transmitting power (P) by a factor of at least 43 + 10 log(P) dB. The emission limit equal to -13dBm. (Part 27 Subpart L)

The power of any emission outside of the authorized operating frequency ranges must be attenuated below the transmitting power (P) by a factor of at least 55 + 10 log(P) dB. The emission limit equal to -25dBm. (Part 27 Subpart M)

3.3.2 TEST PROCEDURES

The testing follows FCC KDB 971168 v03r01 Section 6.

1. The EUT was connected to spectrum analyzer and system simulator via a power divider.
2. The band edges of low and high channels for the highest RF powers were measured. Set RBW>=1% EBW in the 1MHz band immediately outside and adjacent to the band edge.
3. Set spectrum analyzer with Peak detector.
4. The RF fundamental frequency should be excluded against the limit line in the operating frequency band.

3.3.3 TEST SETUP LAYOUT

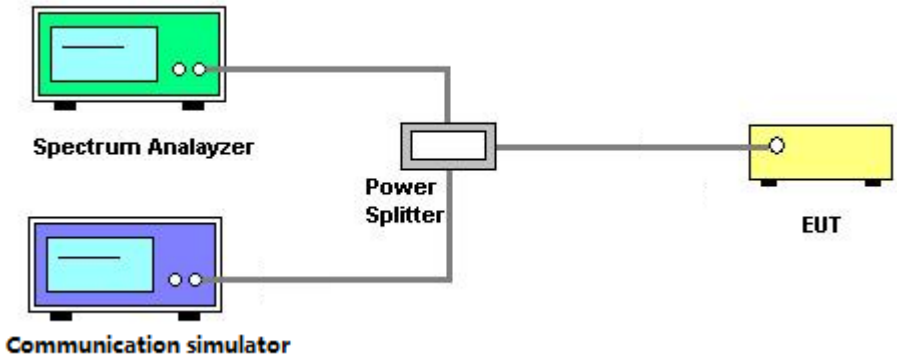

3.3.4 TEST DEVIATION

No deviation

3.3.5 TEST RESULTS

Please refer to the APPENDIX C.

3.4 RADIATED SPURIOUS EMISSIONS MEASUREMENT

3.4.1 LIMIT

The power of any emission outside of the authorized operating frequency ranges must be attenuated below the transmitting power (P) by a factor of at least 43 + 10 log(P) dB. The emission limit equal to -13dBm. (Part 27 Subpart L)

The power of any emission outside of the authorized operating frequency ranges must be attenuated below the transmitting power (P) by a factor of at least 55 + 10 log(P) dB. The emission limit equal to -25dBm. (Part 27 Subpart M)

3.4.2 TEST PROCEDURES

The testing follows FCC KDB 971168 v03r01 Section 6.2.

1. In the semi-anechoic chamber, EUT placed on the 0.8m height of Turn Table, rotated the table around 360 degrees to search the maximum radiation power and receiver antenna shall be rotated vertical and horizontal polarization and moved height from 1m to 4m to find the maximum polar radiated power. The “Read Value” is the spectrum reading the maximum power value.
2. The substitution horn antenna is substituted for EUT at the same position and signals generator export the CW signal to the substitution antenna via a TX cable. Rotated the Turn Table and moved receiving antenna to find the maximum radiation power. Adjust output power level of S.G to get a Value of spectrum reading equal to “Read Value “ of step a. Record the power level of S.G
3. EIRP = Output power level of S.G – TX cable loss + Antenna gain of substitution horn.
4. ERP can be calculated form EIRP by subtracting the gain of dipole, ERP = EIPR - 2.15dBi.
5. The resolution bandwidth and video bandwidth of test receiver/spectrum analyzer is 1MHz/3MHz.

3.4.3 TEST SETUP LAYOUT

Below 30MHz

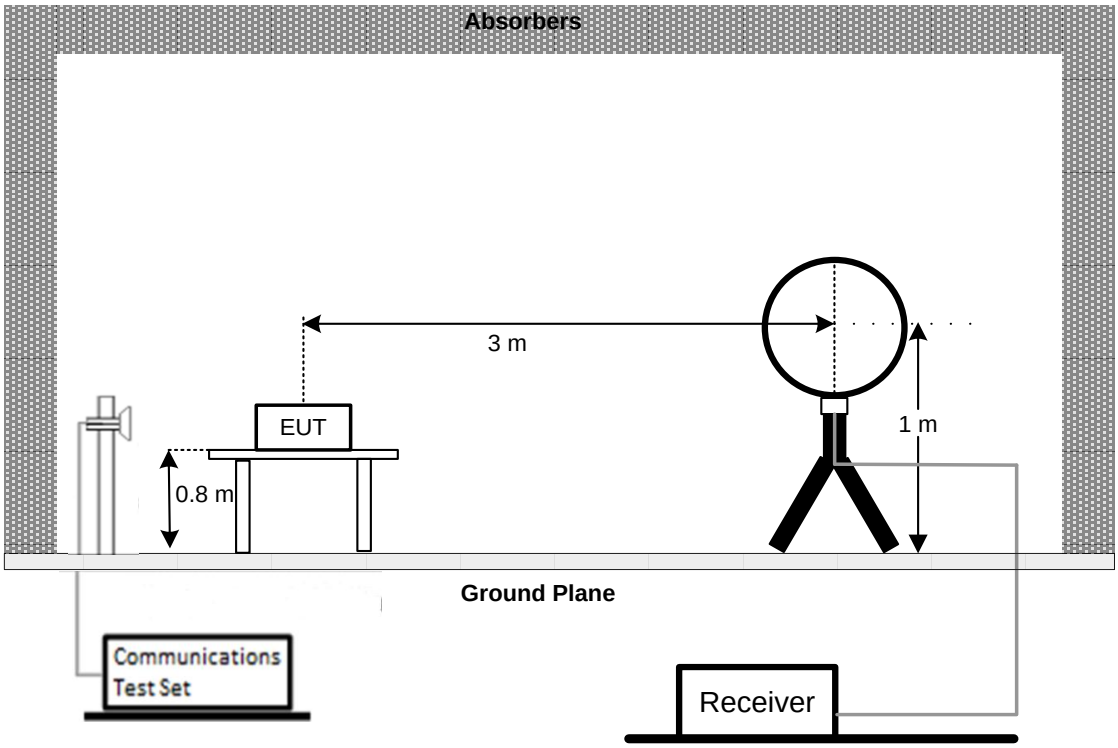

30MHz to 1GHz

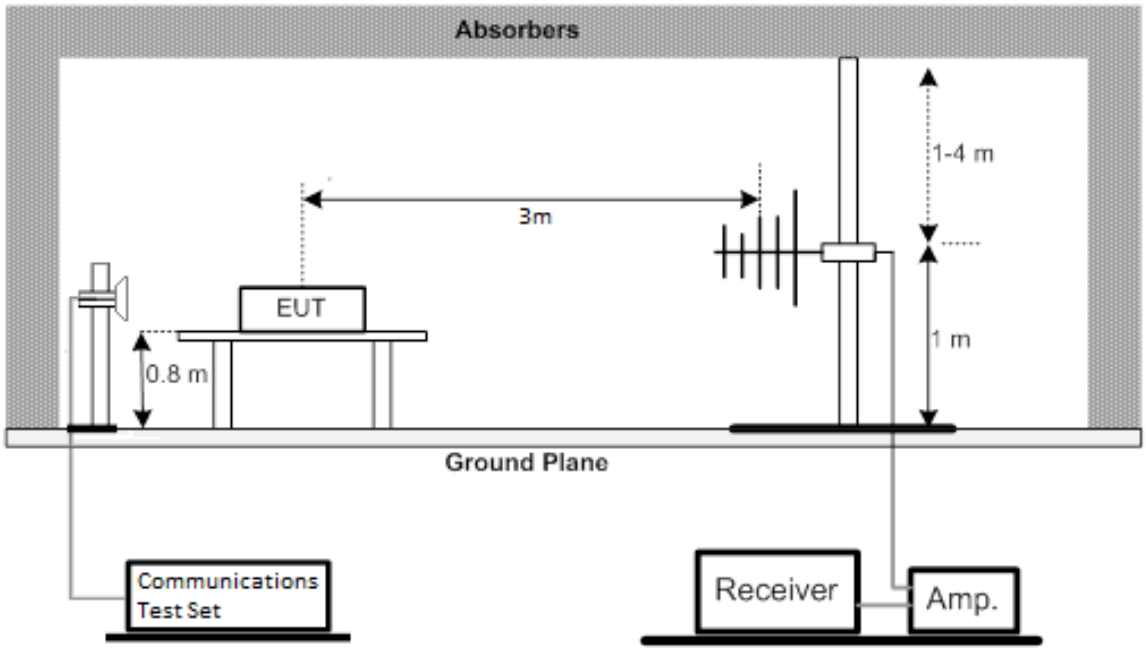

Above 1GHz

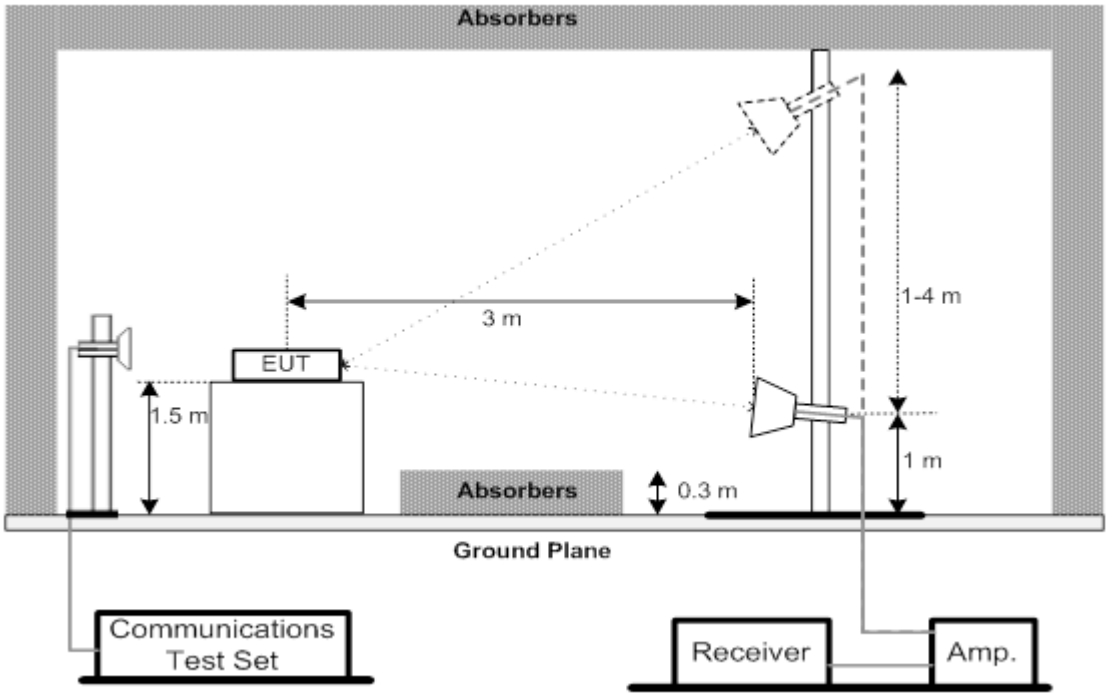

3.4.4 TEST RESULTS (9KHZ TO 30MHZ)

Please refer to the APPENDIX D.

3.4.5 TEST RESULTS (30MHZ TO 1000MHZ)

Please refer to the APPENDIX E.

3.4.6 TEST RESULTS (ABOVE 1000MHZ)

Please refer to the APPENDIX F.

3.5 BAND EDGE MEASUREMENT

3.5.1 LIMIT

The power of any emission outside a licensee's frequency band(s) of operation shall be attenuated below the transmitter power (P) within the licensed band(s) of operation, measured in watts, by at least 43 + 10 log (P) dB. Compliance with this provision is based on the use of measurement instrumentation employing a resolution bandwidth of 100 kilohertz or greater. However, in the 100 kilohertz bands immediately outside and adjacent to a licensee's frequency block, a resolution bandwidth of at least 30 kHz may be employed. (Part 27 Subpart L)

For mobile digital stations, the attenuation factor shall be not less than 40 + 10 log (P) dB on all frequencies between the channel edge and 5 megahertz from the channel edge, 43 + 10 log (P) dB on all frequencies between 5 megahertz and X megahertz from the channel edge, and 55 + 10 log (P) dB on all frequencies more than X megahertz from the channel edge, where X is the greater of 6 megahertz or the actual emission bandwidth as defined in paragraph (m)(6) of this section. In addition, the attenuation factor shall not be less that 43 + 10 log (P) dB on all frequencies between 2490.5 MHz and 2496 MHz and 55 + 10 log (P) dB at or below 2490.5 MHz. Mobile Satellite Service licensees operating on frequencies below 2495 MHz may also submit a documented interference complaint against BRS licensees operating on channel BRS Channel 1 on the same terms and conditions as adjacent channel BRS or EBS licensees. (Part 27 Subpart M)

3.5.2 TEST PROCEDURES

The testing follows FCC KDB 971168 v03r01 Section 6.

1. All measurements were done at low and high operational frequency range.
2. Record the max trace plot into the test report.

3.5.3 TEST SETUP LAYOUT

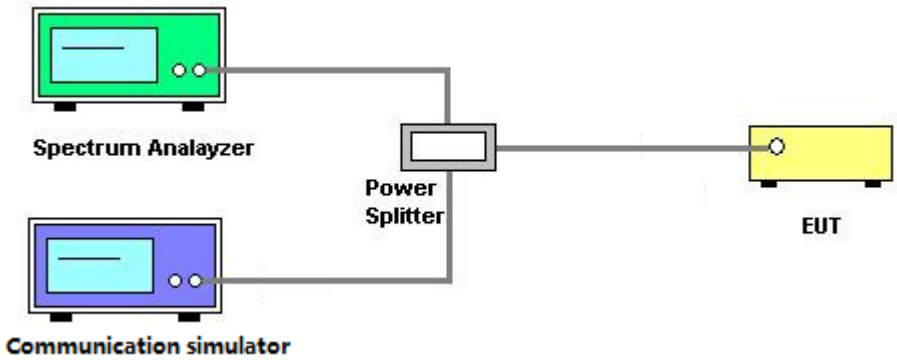

3.5.4 TEST DEVIATION

No deviation

3.5.5 TEST RESULTS

Please refer to the APPENDIX G.

3.6 PEAK TO AVERAGE RATIO MEASUREMENT

3.6.1 LIMIT

In measuring transmissions in this band using an average power technique, the peak to-average ratio (PAR) of the transmission may not exceed 13 dB.

3.6.2 TEST PROCEDURES

The testing follows FCC KDB 971168 v03r01 Section 5.7.

1. Set resolution/measurement bandwidth ≥ signal's occupied bandwidth;
2. Set the number of counts to a value that stabilizes the measured CCDF curve;
3. Record the maximum PAPR level associated with a probability of 0.1%.

3.6.3 TEST SETUP LAYOUT

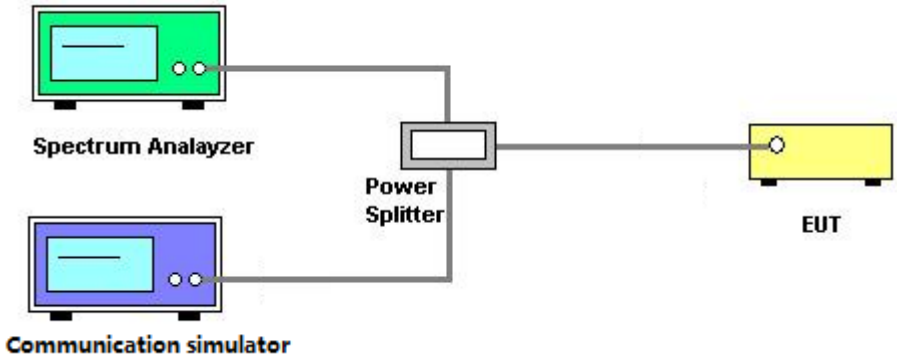

3.6.4 TEST DEVIATION

No deviation

3.6.5 TEST RESULTS

Please refer to the APPENDIX H.

3.7 FREQUENCY STABILITY MEASUREMENT

3.7.1 LIMIT

±1.5 ppm is for base and fixed station. ±2.5 ppm is for mobile station.

3.7.2 TEST PROCEDURES

The testing follows FCC KDB 971168 v03r01 Section 9.

1. Device is placed at the oven room. The oven room could control the temperatures and humidity. Power warm up is at least 15 min and power applied should perform before recording frequency error.
2. EUT is connected the external power supply to control the DC input power. The test voltage range is from minimum to maximum working voltage. Each step shall be record the frequency error rate.
3. The temperature range step is 10 degrees in this test items. All temperature levels shall be hold the ±0.5°C during the measurement testing. The each temperature step shall be at least 0.5 hours, consider the EUT could be test under the stability condition.
4. The frequency error was recorded frequency error from the communication simulator.

3.7.3 TEST SETUP LAYOUT

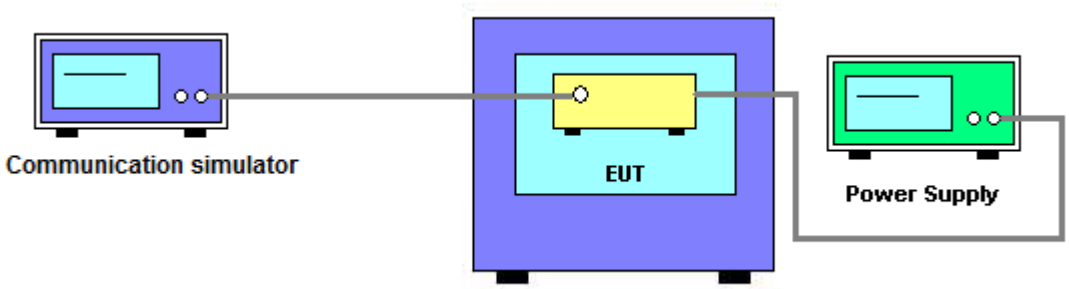

3.7.4 TEST DEVIATION

No deviation

3.7.5 TEST RESULTS

Please refer to the APPENDIX I.

4. LIST OF MEASUREMENT EQUIPMENTS

Radiated Spurious Emission Measurement					
Item	Kind of Equipment	Manufacturer	Type No.	Serial No.	Calibrated until
1	Antenna	Schwarzbeck	VULB9160	9160-3231	Apr. 17, 2021
2	Amplifier	Agilent	8449B	3008A02334	Feb. 28, 2022
3	HighPass Filter	Wairrwright Instruments Gmbh	WHK 1.5/15G-10ST	11	Feb. 28, 2022
4	Band Reject Filter	Wairrwright Instruments Gmbh	WRCG 1710/1785-1690/1805-60/12SS	38	Feb. 27, 2022
5	Band Reject Filter	Wairrwright Instruments Gmbh	WRCG 824/849-810/863-60/9SS	7	Feb. 27, 2022
6	Band Reject Filter	Wairrwright Instruments Gmbh	WRCG 880/915-860/935-60/9SS	14	Feb. 27, 2022
7	Band Reject Filter	Wairrwright Instruments Gmbh	WRCG 1850/1910-1830/1930-60/10SS	17	Feb. 27, 2022
8	HighPass Filter	Wairrwright Instruments Gmbh	WHK3.1/18G-10SS	24	Feb. 27, 2022
9	Wireless Communication Test SET	Agilent	E5515C	MY48364183	Feb. 28, 2022
10	Microwave Preamplifier With Adaptor	EMC INSTRUMENT	EMC2654045	980039 & HA01	Feb. 28, 2022
11	Receiver	Agilent	N9038A	MY52130039	Jul. 25, 2021
12	wideband radio communication tester	R&S	CMW500	152372	Feb. 27, 2022
13	High pass filter	KANGMAIWEI	ZHPF-M3-12.75G-3869	B2015073763	Feb. 07, 2022
14	High pass filter	KANGMAIWEI	ZHPF-M1000-4000-1	B2015073762	Feb. 07, 2022
15	High pass filter	KANGMAIWEI	ZHPF-M6-186-1727	B2015073764	Feb. 07, 2022
16	Cable	emci	LMR-400(30MHz-1GHz) (8m+5m)	N/A	May 23, 2021
17	Cable	mitron	B10-01-01-12M	18072744	Jun. 28, 2021
18	Controller	ETS-Lindgren	2090	N/A	N/A
19	Measurement Software	Farad	EZ-EMC Ver.NB-03A1-01	N/A	N/A
20	Loop Antenna	EM	EM-6876-1	230	Apr. 16, 2021
21	Double Ridged Guide Antenna	ETS	3115	75846	Mar. 19, 2021
22	Broad-Band Horn Antenna	Schwarzbeck	BBHA 9170	9170319	Jul. 07, 2021

Conducted Measurement					
Item	Kind of Equipment	Manufacturer	Type No.	Serial No.	Calibrated until
1	Wireless Communication Test SET	Agilent	E5515C	MY48364183	Feb. 28, 2022
2	EXA Spectrum Analyzer	Agilent	N9010A	MY50520044	Feb. 28, 2022
3	POWER SPLITTER	Mini-Circuits	ZFRSC-123-S+	331000910-1	Feb. 27, 2022
4	wideband radio communication tester	R&S	CMW500	152372	Feb. 27, 2022

Frequency Stability Measurement					
Item	Kind of Equipment	Manufacturer	Type No.	Serial No.	Calibrated until
1	Wireless Communication Test SET	Agilent	E5515C	MY48364183	Feb. 28, 2022
2*	Multi-output DC Power Supply	GW Instek	GPC-3030DN	EK880675	Jul. 25, 2023
3	POWER SPLITTER	Mini-Circuits	ZFRSC-123-S+	331000910-1	Feb. 27, 2022
4	wideband radio communication tester	R&S	CMW500	152372	Feb. 27, 2022
5	Const Temp,& Humidity Chamber	Bell	BTH-50C	20170306001	Feb. 27, 2022

Remark: “N/A” denotes no model name, serial no. or calibration specified.
“*” calibration period of equipment list is three year.
Except * item, all calibration period of equipment list is one year.

5. EUT TEST PHOTO

Radiated Emissions Test Photos

9 kHz to 30 MHz

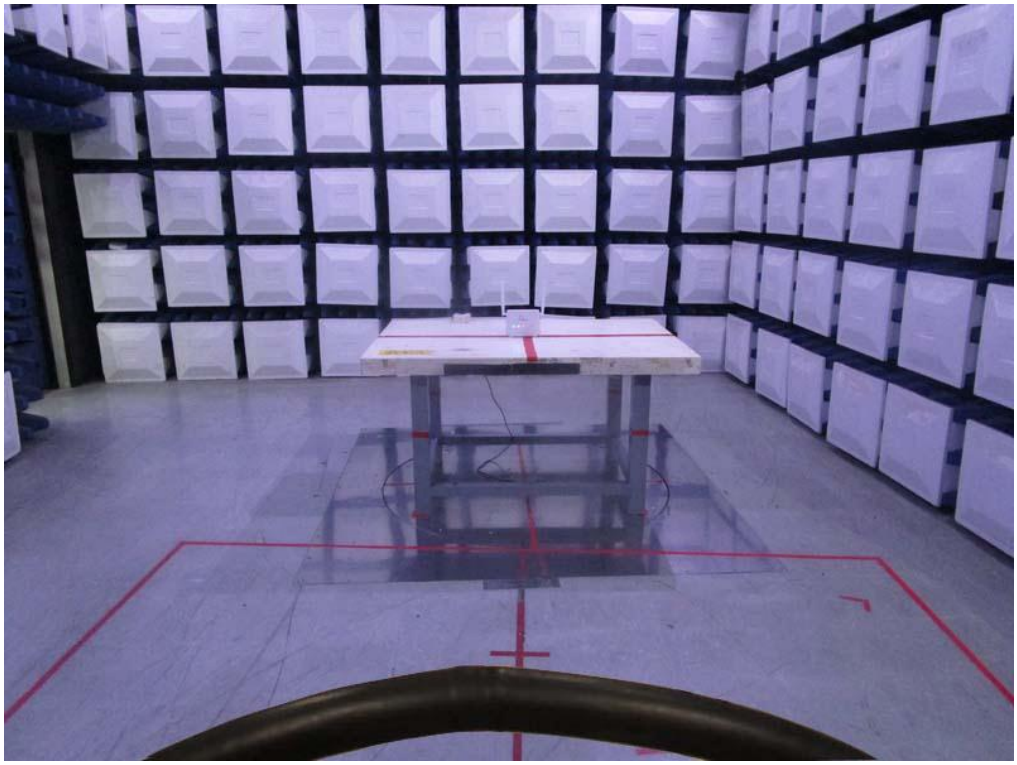

Radiated Emissions Test Photos

30 MHz to 1 GHz

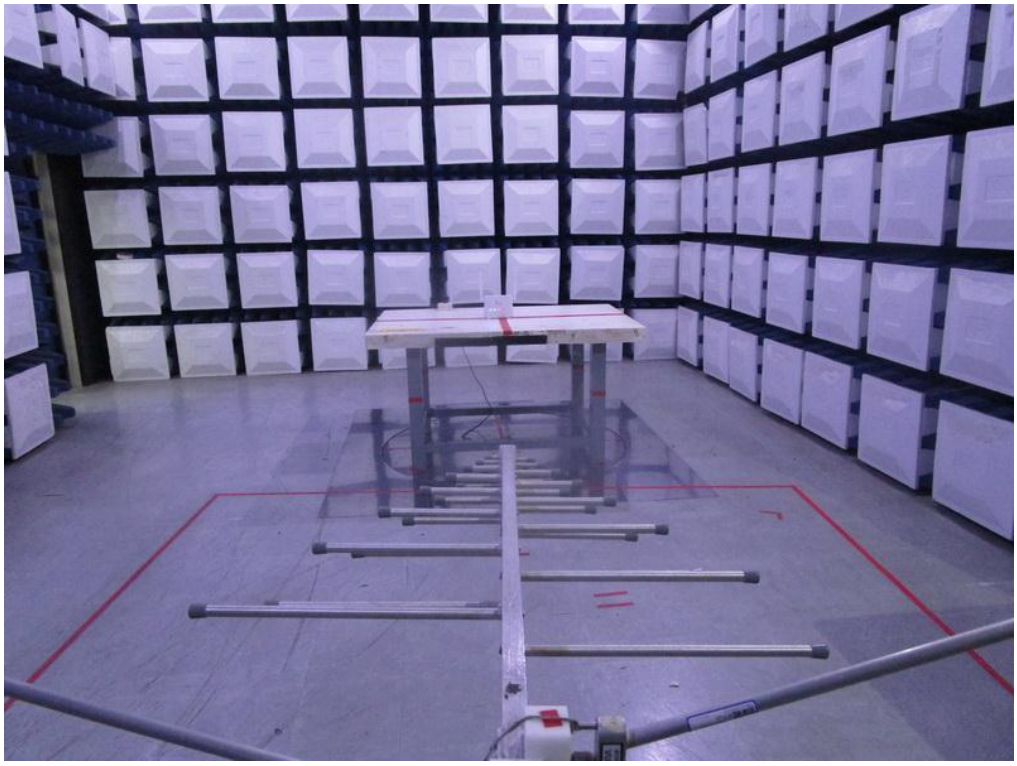

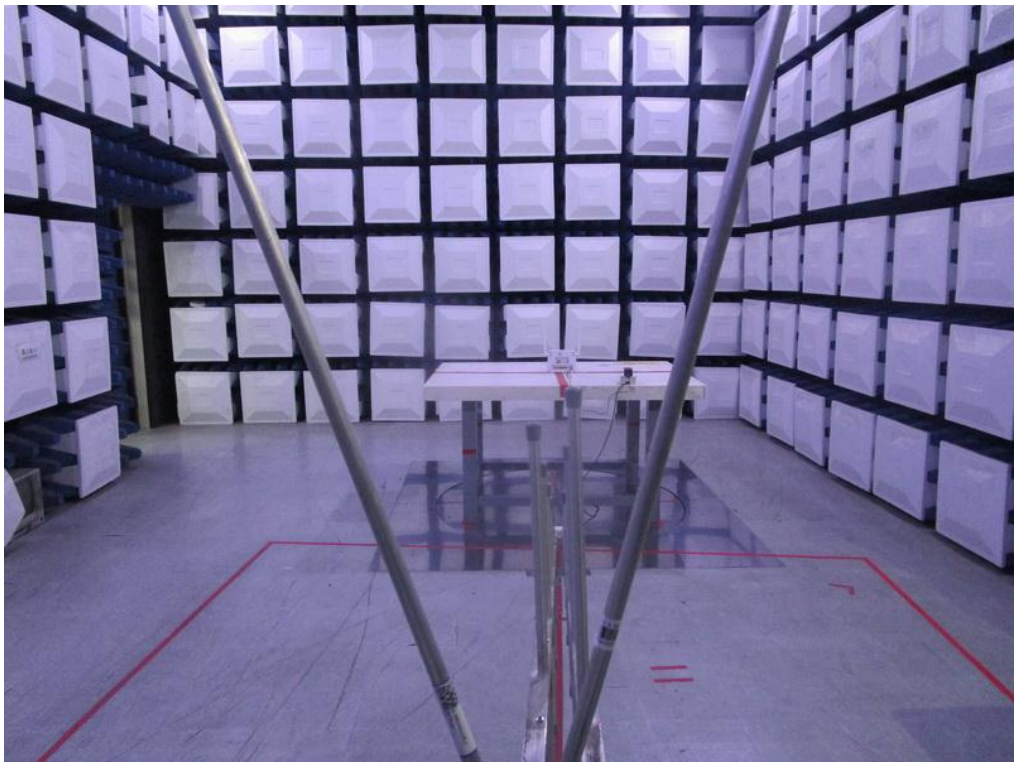

Radiated Emissions Test Photos

Above 1 GHz

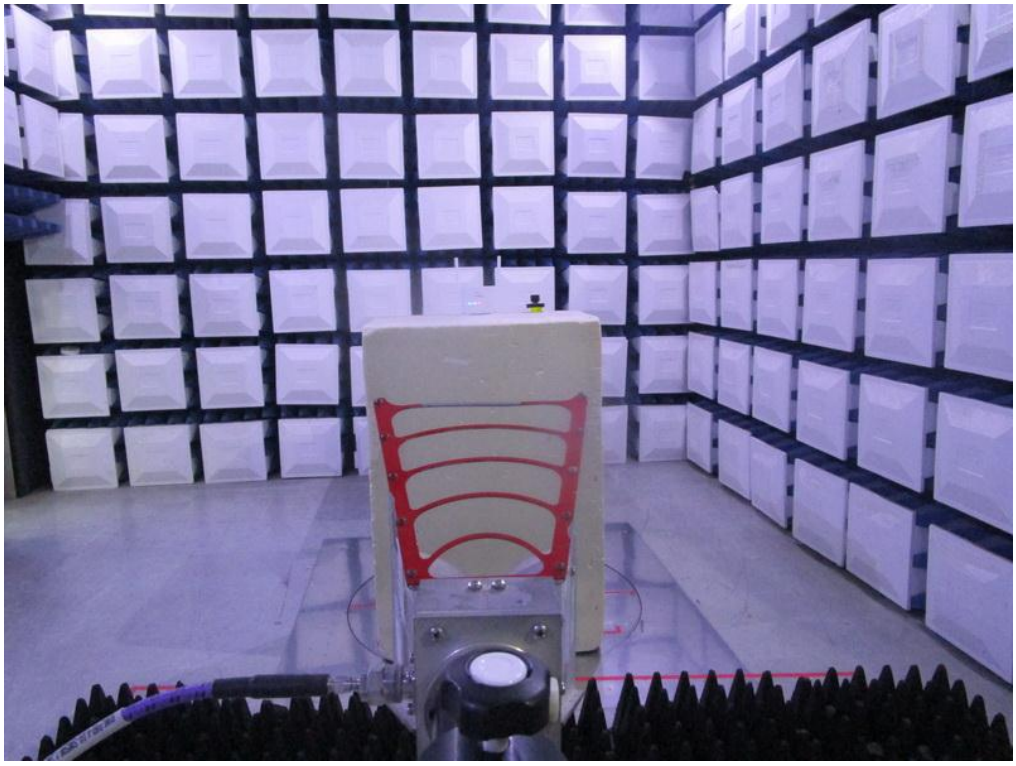

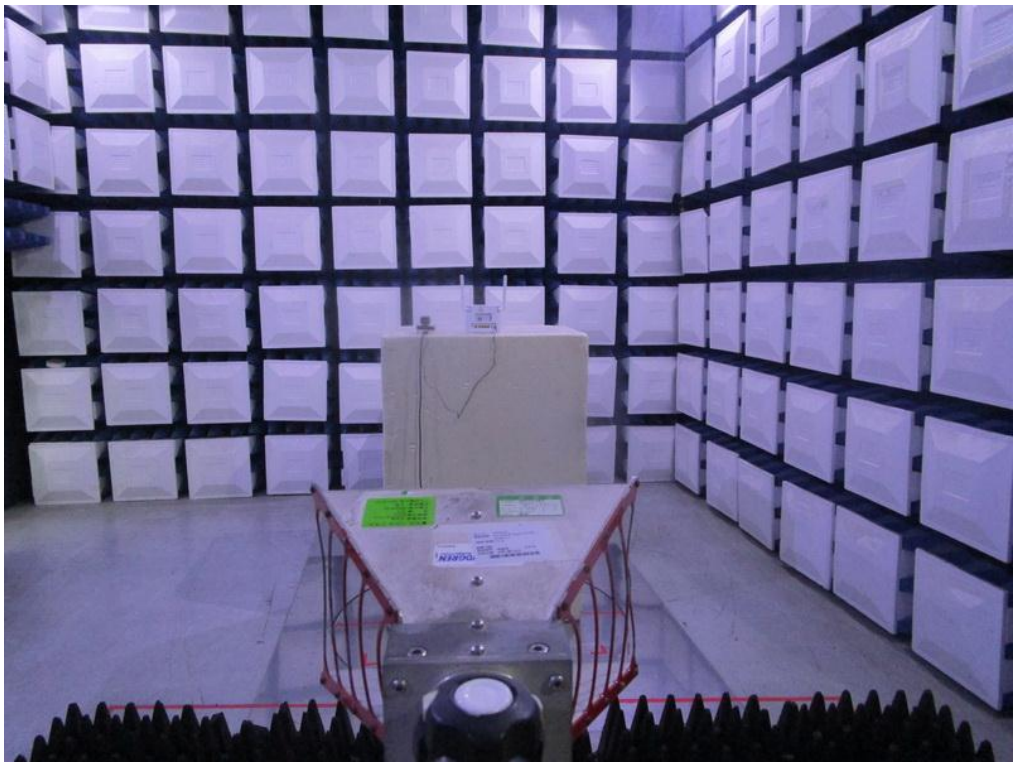

APPENDIX A - OUTPUT POWER

Output Power (dBm):

Modulation	Band	WCDMA Band IV		
	Tx Channel	1312CH	1413CH	1513CH
	Frequency	1712.4MHz	1732.6MHz	1752.6MHz
QPSK	RMC 12.2K	22.63	22.55	22.5
	RMC 64K	22.64	22.56	22.52
	RMC 144K	22.65	22.54	22.49
	RMC 384K	22.65	22.55	22.52
	HSDPA Subtest-1	21.36	21.22	21.17
	HSDPA Subtest-2	21.38	21.24	21.19
	HSDPA Subtest-3	20.89	20.73	20.71
	HSDPA Subtest-4	20.93	20.75	20.71
	HSUPA Subtest-1	21.37	21.31	21.17
	HSUPA Subtest-2	19.38	19.34	19.2
	HSUPA Subtest-3	20.36	20.33	20.2
	HSUPA Subtest-4	19.41	19.36	19.22
	HSUPA Subtest-5	21.31	21.18	21.21

LTE Band / BW	Modulation	RB Size	RB Offset	Low CH	Mid CH	High CH
				19957CH	20175CH	20393CH
				1710.7MHz	1732.5MHz	1754.3MHz
4 / 1.4M	QPSK	1	0	22.35	22.32	22.19
		1	2	22.35	22.32	22.25
		1	5	22.30	22.24	22.18
		3	0	22.29	22.36	22.26
		3	1	22.36	22.37	22.29
		3	2	22.30	22.31	22.26
		6	0	21.35	21.32	21.27
	16QAM	1	0	21.46	21.42	21.65
		1	2	21.46	21.44	21.67
		1	5	21.42	21.37	21.31
		3	0	21.44	21.43	21.41
		3	1	21.47	21.45	21.43
		3	2	21.42	21.44	21.39
		6	0	20.59	20.49	20.48
	64QAM	1	0	20.53	20.53	20.50
		1	2	20.57	20.55	20.55
		1	5	20.45	20.52	20.48
		3	0	20.52	20.53	20.34
		3	1	20.58	20.53	20.53
		3	2	20.53	20.50	20.61
		6	0	19.68	19.63	19.33

LTE Band / BW	Modulation	RB Size	RB Offset	Low CH	Mid CH	High CH
				19965CH	20175CH	20385CH
				1711.5MHz	1732.5MHz	1753.5MHz
4 / 3M	QPSK	1	0	22.34	22.31	22.32
		1	7	22.40	22.35	22.40
		1	14	22.31	22.22	22.24
		8	0	21.47	21.40	21.33
		8	4	21.36	21.38	21.28
		8	7	21.34	21.35	21.36
		15	0	21.37	21.35	21.35
	16QAM	1	0	21.32	21.39	21.36
		1	7	21.35	21.47	21.48
		1	14	21.32	21.25	21.28
		8	0	20.60	20.46	20.39
		8	4	20.49	20.49	20.38
		8	7	20.47	20.43	20.46
		15	0	20.45	20.41	20.38
	64QAM	1	0	20.70	20.59	20.59
		1	7	20.64	20.63	20.70
		1	14	20.58	20.46	20.51
		8	0	19.56	19.37	19.38
		8	4	19.49	19.36	19.39
		8	7	19.37	19.33	19.40
		15	0	19.45	19.42	19.47

LTE Band / BW	Modulation	RB Size	RB Offset	Low CH	Mid CH	High CH
				19975CH	20175CH	20375CH
				1712.5MHz	1732.5MHz	1752.5MHz
4 / 5M	QPSK	1	0	22.50	22.54	22.44
		1	13	22.61	22.47	22.44
		1	24	22.38	22.31	22.29
		12	0	21.51	21.44	21.35
		12	6	21.52	21.43	21.39
		12	11	21.48	21.37	21.31
		25	0	21.46	21.38	21.34
	16QAM	1	0	21.55	21.65	21.54
		1	13	21.65	21.53	21.51
		1	24	21.50	21.46	21.41
		12	0	20.58	20.52	20.43
		12	6	20.59	20.49	20.49
		12	11	20.65	20.52	20.46
		25	0	20.55	20.46	20.42
	64QAM	1	0	20.40	20.80	20.70
		1	13	20.52	20.66	20.67
		1	24	20.34	20.56	20.54
		12	0	19.55	19.50	19.39
		12	6	19.54	19.48	19.50
		12	11	19.44	19.30	19.27
		25	0	19.45	19.36	19.31

LTE Band / BW	Modulation	RB Size	RB Offset	Low CH	Mid CH	High CH
				20000CH	20175CH	20350CH
				1715MHz	1732.5MHz	1750MHz
4 / 10M	QPSK	1	0	22.56	22.58	22.42
		1	25	22.36	22.29	22.24
		1	49	22.38	22.25	22.26
		25	0	21.55	21.50	21.34
		25	13	21.42	21.46	21.37
		25	25	21.41	21.39	21.33
		50	0	21.54	21.52	21.37
	16QAM	1	0	21.54	21.62	21.49
		1	25	21.23	21.33	21.29
		1	49	21.30	21.24	21.60
		25	0	20.61	20.53	20.40
		25	13	20.46	20.46	20.41
		25	25	20.43	20.39	20.37
		50	0	20.56	20.49	20.39
	64QAM	1	0	20.88	20.82	20.73
		1	25	20.62	20.54	20.50
		1	49	20.62	20.48	20.45
		25	0	19.59	19.56	19.47
		25	13	19.54	19.50	19.54
		25	25	19.47	19.44	19.40
		50	0	19.57	19.52	19.44

LTE Band / BW	Modulation	RB Size	RB Offset	Low CH	Mid CH	High CH
				20025CH	20175CH	20325CH
				1717.5MHz	1732.5MHz	1747.5MHz
4 / 15M	QPSK	1	0	23.02	23.02	22.93
		1	38	22.48	22.46	22.37
		1	74	22.68	22.64	22.61
		36	0	21.70	21.78	21.62
		36	18	21.50	21.54	21.39
		36	39	21.54	21.48	21.48
		75	0	21.62	21.57	21.52
	16QAM	1	0	21.82	21.82	22.21
		1	38	21.24	21.76	21.72
		1	74	21.96	21.90	21.82
		36	0	20.74	20.71	20.58
		36	18	20.53	20.54	20.41
		36	39	20.51	20.52	20.51
		75	0	20.61	20.58	20.57
	64QAM	1	0	21.19	21.17	21.08
		1	38	20.59	20.90	20.52
		1	74	20.71	21.12	20.77
		36	0	19.77	19.73	19.72
		36	18	19.56	19.55	19.51
		36	39	19.55	19.53	19.58
		75	0	19.69	19.59	19.65

LTE Band / BW	Modulation	RB Size	RB Offset	Low CH	Mid CH	High CH
				20050CH	20175CH	20300CH
				1720MHz	1732.5MHz	1740MHz
4 / 20M	QPSK	1	0	23.20	23.32	23.23
		1	50	22.36	22.41	22.38
		1	99	22.81	22.74	22.77
		50	0	21.74	21.92	21.82
		50	25	21.59	21.60	21.48
		50	50	21.61	21.57	21.59
		100	0	21.68	21.68	21.72
	16QAM	1	0	22.58	22.63	22.60
		1	50	21.72	21.73	21.70
		1	99	22.14	22.20	22.08
		50	0	20.79	20.89	20.81
		50	25	20.56	20.59	20.48
		50	50	20.52	20.55	20.55
		100	0	20.75	20.65	20.69
	64QAM	1	0	21.59	21.52	21.47
		1	50	20.73	20.68	20.62
		1	99	21.44	20.93	21.37
		50	0	19.80	19.96	19.80
		50	25	19.61	19.59	19.54
		50	50	19.60	19.61	19.61
		100	0	19.73	19.64	19.66

LTE Band / BW	Modulation	RB Size	RB Offset	Low CH	Mid CH	High CH
				20775CH	21100CH	21425CH
				2502.5MHz	2535MHz	2567.5MHz
7 / 5M	QPSK	1	0	22.07	22.32	22.63
		1	13	22.11	22.19	22.59
		1	24	22.04	22.12	22.48
		12	0	21.19	21.15	21.45
		12	6	21.19	21.10	21.48
		12	11	21.15	21.11	21.44
		25	0	21.16	21.08	21.47
	16QAM	1	0	21.20	21.41	22.03
		1	13	21.22	21.35	21.98
		1	24	21.16	21.28	21.88
		12	0	20.27	20.31	20.64
		12	6	20.24	20.30	20.63
		12	11	20.19	20.22	20.62
		25	0	20.11	20.12	20.54
	64QAM	1	0	20.06	20.66	20.80
		1	2	20.08	20.56	20.74
		1	5	20.02	20.31	20.63
		3	0	19.20	19.10	19.56
		3	1	19.17	19.07	19.54
		3	2	19.16	19.08	19.50
		6	0	19.09	19.07	19.48

LTE Band / BW	Modulation	RB Size	RB Offset	Low CH	Mid CH	High CH
				20800CH	21100CH	21400CH
				2505MHz	2535MHz	2565MHz
7 / 10M	QPSK	1	0	22.15	22.35	22.47
		1	25	22.00	22.09	22.40
		1	49	22.06	22.09	22.30
		25	0	21.21	21.27	21.41
		25	13	21.22	21.15	21.55
		25	25	21.21	21.27	21.48
		50	0	21.16	21.17	21.44
	16QAM	1	0	21.15	21.64	21.46
		1	25	20.90	21.36	21.41
		1	49	20.94	21.42	21.31
		25	0	20.16	20.26	20.44
		25	13	20.20	20.12	20.58
		25	25	20.16	20.27	20.50
		50	0	20.07	20.15	20.42
	64QAM	1	0	20.51	20.43	20.70
		1	25	20.29	20.17	20.60
		1	49	20.35	20.22	20.49
		25	0	19.16	19.31	19.51
		25	13	19.20	19.20	19.60
		25	25	19.20	19.31	19.56
		50	0	19.11	19.16	19.44

LTE Band / BW	Modulation	RB Size	RB Offset	Low CH	Mid CH	High CH
				20825CH	21100CH	21375CH
				2507.5MHz	2535MHz	2562.5MHz
7 / 15M	QPSK	1	0	22.26	22.63	22.70
		1	38	21.98	22.26	22.26
		1	74	22.01	22.29	22.35
		36	0	21.04	21.39	21.43
		36	18	20.98	21.27	21.30
		36	39	21.02	21.25	21.28
		75	0	20.97	21.31	21.29
	16QAM	1	0	21.05	21.93	21.96
		1	38	20.75	21.56	21.63
		1	74	20.83	21.61	21.61
		36	0	20.00	20.40	20.50
		36	18	19.98	20.27	20.42
		36	39	20.02	20.25	20.37
		75	0	19.98	20.33	20.39
	64QAM	1	0	20.40	20.72	21.04
		1	38	20.09	20.32	20.64
		1	74	20.18	20.34	20.75
		36	0	19.01	19.47	19.38
		36	18	19.00	19.33	19.29
		36	39	19.02	19.29	19.24
		75	0	19.04	19.31	19.36

LTE Band / BW	Modulation	RB Size	RB Offset	Low CH	Mid CH	High CH
				20850CH	21100CH	21350CH
				2510MHz	2535MHz	2560MHz
7 / 20M	QPSK	1	0	22.40	22.68	22.80
		1	50	22.02	22.16	22.16
		1	99	22.17	22.29	22.28
		50	0	21.18	21.41	21.50
		50	25	21.11	21.28	21.28
		50	50	21.09	21.31	21.27
		100	0	21.21	21.37	21.32
	16QAM	1	0	21.86	22.01	22.08
		1	50	21.41	21.46	21.49
		1	99	21.57	21.59	21.60
		50	0	20.10	20.39	20.45
		50	25	20.03	20.26	20.25
		50	50	20.05	20.30	20.21
		100	0	20.12	20.35	20.35
	64QAM	1	0	20.70	21.28	21.05
		1	50	20.25	20.79	20.41
		1	99	20.43	20.89	20.54
		50	0	19.14	19.46	19.55
		50	25	19.06	19.32	19.34
		50	50	19.09	19.35	19.29
		100	0	19.15	19.36	19.37

LTE Band / BW	Modulation	RB Size	RB Offset	Low CH	Mid CH	High CH
				23017CH	23095CH	23173CH
				699.7MHz	707.5MHz	715.3MHz
12 / 1.4M	QPSK	1	0	22.63	22.56	22.66
		1	2	22.71	22.67	22.78
		1	5	22.67	22.61	22.72
		3	0	22.71	22.64	22.62
		3	1	22.74	22.66	22.71
		3	2	22.70	22.65	22.63
		6	0	21.68	21.69	21.62
	16QAM	1	0	21.96	21.65	21.70
		1	2	22.07	21.73	21.81
		1	5	22.01	21.67	21.80
		3	0	21.83	21.78	21.69
		3	1	21.89	21.82	21.81
		3	2	21.84	21.79	21.74
		6	0	20.68	20.86	20.79
	64QAM	1	0	20.78	21.07	20.80
		1	2	20.88	21.17	20.91
		1	5	20.83	21.04	20.86
		3	0	20.85	21.00	20.85
		3	1	20.88	21.03	20.91
		3	2	20.90	21.03	20.84
		6	0	19.99	19.71	19.94

LTE Band / BW	Modulation	RB Size	RB Offset	Low CH	Mid CH	High CH
				23025CH	23095CH	23165CH
				700.5MHz	707.5MHz	714.5MHz
12 / 3M	QPSK	1	0	22.65	22.63	22.79
		1	7	22.85	22.79	22.86
		1	14	22.76	22.71	22.74
		8	0	21.80	21.73	21.90
		8	4	21.86	21.76	21.90
		8	7	21.82	21.75	21.74
		15	0	21.81	21.76	21.88
	16QAM	1	0	21.55	21.96	21.86
		1	7	21.72	22.12	21.92
		1	14	21.60	22.02	21.78
		8	0	20.88	20.84	20.94
		8	4	20.94	20.86	20.93
		8	7	20.89	20.84	20.78
		15	0	20.83	20.79	20.79
	64QAM	1	0	20.99	20.75	21.06
		1	7	21.17	20.93	21.12
		1	14	21.06	20.82	20.96
		8	0	19.83	19.77	19.86
		8	4	19.93	19.84	19.87
		8	7	19.85	19.79	19.68
		15	0	19.82	19.80	19.91

LTE Band / BW	Modulation	RB Size	RB Offset	Low CH	Mid CH	High CH
				23035CH	23095CH	23155CH
				701.5MHz	707.5MHz	713.5MHz
12 / 5M	QPSK	1	0	22.79	22.65	22.78
		1	13	22.95	22.79	23.02
		1	24	22.87	22.77	22.83
		12	0	21.79	21.68	21.77
		12	6	21.84	21.80	21.93
		12	11	21.78	21.75	21.91
		25	0	21.78	21.77	21.74
	16QAM	1	0	21.84	22.19	21.88
		1	13	22.00	22.28	22.07
		1	24	21.92	22.30	21.87
		12	0	20.87	20.83	20.82
		12	6	20.94	20.90	20.95
		12	11	20.88	20.91	20.92
		25	0	20.85	20.84	20.75
	64QAM	1	0	20.69	21.03	21.01
		1	13	20.87	21.10	21.22
		1	24	20.79	21.05	21.05
		12	0	19.88	19.66	19.84
		12	6	19.90	19.73	19.95
		12	11	19.85	19.72	19.99
		25	0	19.80	19.76	19.78

LTE Band / BW	Modulation	RB Size	RB Offset	Low CH	Mid CH	High CH
				23060CH	23095CH	23130CH
				704MHz	707.5MHz	711MHz
12 / 10M	QPSK	1	0	22.61	22.73	22.62
		1	25	22.77	22.72	22.74
		1	49	22.62	22.63	22.58
		25	0	21.82	21.76	21.81
		25	13	21.78	21.81	21.85
		25	25	21.74	21.80	21.84
		50	0	21.76	21.86	21.78
	16QAM	1	0	21.55	22.04	22.01
		1	25	21.68	22.03	22.14
		1	49	21.50	22.01	22.01
		25	0	20.75	20.78	20.84
		25	13	20.78	20.83	20.88
		25	25	20.72	20.83	20.81
		50	0	20.71	20.85	20.82
	64QAM	1	0	20.93	20.85	20.84
		1	25	21.06	20.90	20.97
		1	49	20.92	20.81	20.81
		25	0	19.76	19.82	19.91
		25	13	19.80	19.91	19.98
		25	25	19.72	19.90	19.91
		50	0	19.77	19.87	19.85

LTE Band / BW	Modulation	RB Size	RB Offset	Low CH	Mid CH	High CH
				CH23205	CH23230	CH23255
				779.5MHz	782MHz	784.5MHz
13 / 5M	QPSK	1	0	22.87	22.76	22.81
		1	13	23.01	22.86	22.98
		1	24	23.03	22.91	22.96
		12	0	21.92	21.84	21.92
		12	6	21.94	21.95	22.00
		12	11	21.80	21.91	21.83
		25	0	21.91	21.90	21.90
	16QAM	1	0	22.35	21.88	22.26
		1	13	22.39	21.99	22.40
		1	24	22.41	22.00	22.41
		12	0	21.01	20.88	21.10
		12	6	21.09	20.97	21.05
		12	11	21.00	20.94	20.92
		25	0	20.94	20.84	20.88
	64QAM	1	0	21.14	21.07	20.75
		1	13	21.22	21.14	20.90
		1	24	21.18	21.19	20.91
		12	0	19.82	19.90	19.95
		12	6	19.90	19.98	20.05
		12	11	19.73	19.97	19.94
		25	0	19.80	19.89	19.93

LTE Band / BW	Modulation	RB Size	RB Offset	Mid CH
				CH23230
				782MHz
13 / 10M	QPSK	1	0	22.61
		1	25	22.78
		1	49	22.77
		25	0	21.90
		25	13	21.93
		25	25	21.91
		50	0	21.91
	16QAM	1	0	21.56
		1	25	21.79
		1	49	21.75
		25	0	21.00
		25	13	21.03
		25	25	21.03
		50	0	20.90
	64QAM	1	0	21.02
		1	25	21.15
		1	49	21.11
		25	0	19.87
		25	13	19.94
		25	25	19.93
		50	0	19.86

LTE Band / BW	Modulation	RB Size	RB Offset	Low CH	Mid CH	High CH
				23755CH	23790CH	23825CH
				706.5MHz	710MHz	713.5MHz
17 / 5M	QPSK	1	0	22.77	22.79	22.81
		1	13	22.90	22.86	23.02
		1	24	22.80	22.86	22.82
		12	0	21.77	21.79	21.84
		12	6	21.83	21.80	21.82
		12	11	21.81	21.74	21.81
		25	0	21.86	21.78	21.88
	16QAM	1	0	21.95	22.26	21.87
		1	13	22.05	22.31	22.00
		1	24	21.94	22.32	21.83
		12	0	20.88	20.95	20.91
		12	6	20.94	20.95	20.93
		12	11	20.87	20.93	20.87
		25	0	20.87	20.84	20.84
	64QAM	1	0	21.08	20.76	21.04
		1	13	21.17	20.79	21.25
		1	24	21.07	20.77	21.00
		12	0	19.84	19.88	19.79
		12	6	19.89	19.85	19.83
		12	11	19.88	19.80	19.77
		25	0	19.85	19.77	19.86

LTE Band / BW	Modulation	RB Size	RB Offset	Low CH	Mid CH	High CH
				23780CH	23790CH	23800CH
				709MHz	710MHz	711MHz
17 / 10M	QPSK	1	0	22.77	22.57	22.70
		1	25	22.72	22.73	22.72
		1	49	22.63	22.64	22.61
		25	0	21.85	21.78	21.82
		25	13	21.82	21.82	21.86
		25	25	21.84	21.79	21.86
		50	0	21.82	21.80	21.79
	16QAM	1	0	21.68	21.93	21.72
		1	25	21.66	22.04	21.78
		1	49	21.55	21.97	21.60
		25	0	20.84	20.80	20.85
		25	13	20.82	20.83	20.91
		25	25	20.80	20.80	20.92
		50	0	20.81	20.78	20.79
	64QAM	1	0	21.06	20.78	20.94
		1	25	21.09	20.89	20.97
		1	49	20.94	20.82	20.76
		25	0	19.86	19.87	19.90
		25	13	19.87	19.93	19.97
		25	25	19.81	19.87	19.98
		50	0	19.85	19.83	19.83

LTE Band / BW	Modulation	RB Sizet	RB Offset	Low CH	Mid CH	High CH
				39675CH	40620CH	41565CH
				2498.5MHz	2593MHz	2687.5MHz
41 / 5M	QPSK	1	0	22.78	23.28	23.05
		1	13	22.95	23.30	23.11
		1	24	22.77	23.14	22.98
		12	0	21.94	22.36	22.16
		12	6	21.93	22.33	22.12
		12	11	21.83	22.19	22.03
		25	0	21.84	22.30	22.09
	16QAM	1	0	22.25	22.50	22.36
		1	13	22.33	22.54	22.38
		1	24	22.23	22.34	22.24
		12	0	20.97	21.36	21.06
		12	6	20.98	21.38	21.07
		12	11	20.95	21.26	20.97
		25	0	20.86	21.31	21.12
	64QAM	1	0	21.19	21.89	21.57
		1	13	21.28	21.95	21.63
		1	24	21.10	21.70	21.55
		12	0	19.87	20.42	20.20
		12	6	19.83	20.38	20.19
		12	11	19.86	20.22	20.12
		25	0	19.77	20.39	19.99

LTE Band / BW	Modulation	RB Sizet	RB Offset	Low CH	Mid CH	High CH
				39700CH	40620CH	41540CH
				2501MHz	2593MHz	2685MHz
41 / 10M	QPSK	1	0	22.84	23.33	23.27
		1	25	22.77	23.25	22.89
		1	49	22.73	23.18	22.91
		25	0	22.01	22.39	22.31
		25	13	21.93	22.31	22.11
		25	25	21.95	22.23	21.99
		50	0	22.00	22.37	22.09
	16QAM	1	0	22.11	22.71	22.55
		1	25	22.11	22.67	22.35
		1	49	21.98	22.56	22.31
		25	0	20.91	21.38	21.25
		25	13	20.92	21.37	21.10
		25	25	20.90	21.22	20.98
		50	0	20.91	21.35	21.16
	64QAM	1	0	20.75	21.84	21.53
		1	25	20.71	21.83	21.22
		1	49	20.64	21.66	21.20
		25	0	19.98	20.31	20.19
		25	13	19.96	20.29	20.03
		25	25	19.93	20.19	19.89
		50	0	19.92	20.28	20.07

LTE Band / BW	Modulation	RB Sizet	RB Offset	Low CH	Mid CH	High CH
				39725CH	40620CH	41515CH
				2503.5MHz	2593MHz	2682.5MHz
41 / 15M	QPSK	1	0	23.05	23.73	23.67
		1	38	22.71	23.35	23.28
		1	74	22.88	23.30	23.24
		36	0	21.97	22.39	22.43
		36	18	21.83	22.37	22.24
		36	39	21.75	22.30	22.16
		75	0	21.89	22.31	22.25
	16QAM	1	0	22.27	23.10	22.87
		1	38	21.95	22.66	22.43
		1	74	22.15	22.65	22.48
		36	0	20.93	21.38	21.38
		36	18	20.79	21.36	21.24
		36	39	20.74	21.21	21.10
		75	0	20.86	21.25	21.24
	64QAM	1	0	20.81	22.29	21.62
		1	38	20.55	21.71	21.19
		1	74	20.70	21.78	21.24
		36	0	20.05	20.45	20.27
		36	18	19.89	20.39	20.14
		36	39	19.79	20.28	20.07
		75	0	19.88	20.22	20.26

LTE Band / BW	Modulation	RB Sizet	RB Offset	Low CH	Mid CH	High CH
				39750CH	40620CH	41490CH
				2506MHz	2593MHz	2680MHz
41 / 20M	QPSK	1	0	23.37	23.88	23.69
		1	50	22.98	23.32	23.20
		1	99	23.09	23.50	23.34
		50	0	22.17	22.59	22.54
		50	25	22.11	22.39	22.29
		50	50	22.13	22.32	22.34
		100	0	22.14	22.48	22.38
	16QAM	1	0	22.65	22.91	22.77
		1	50	22.25	22.37	22.26
		1	99	22.28	22.52	22.39
		50	0	21.14	21.52	21.42
		50	25	21.08	21.33	21.17
		50	50	21.09	21.27	21.17
		100	0	21.16	21.42	21.27
	64QAM	1	0	21.99	21.94	22.05
		1	50	21.68	21.47	21.54
		1	99	21.71	21.59	21.60
		50	0	20.19	20.53	20.47
		50	25	20.12	20.41	20.30
		50	50	20.13	20.26	20.27
		100	0	20.08	20.41	20.32

LTE Band / BW	Modulation	RB Sizet	RB Offset	Low CH	Mid CH	High CH
				131997CH	132322CH	132647CH
				1712.5MHz	1745MHz	1777.5MHz
66 / 5M	QPSK	1	0	22.50	22.43	22.38
		1	13	22.41	22.44	22.39
		1	24	22.40	22.35	22.24
		12	0	21.25	21.39	21.21
		12	6	21.35	21.39	21.26
		12	11	21.25	21.29	21.16
		25	0	21.34	21.34	21.11
	16QAM	1	0	21.53	21.90	21.48
		1	13	21.47	21.94	21.43
		1	24	21.52	21.81	21.32
		12	0	20.36	20.51	20.27
		12	6	20.45	20.46	20.33
		12	11	20.33	20.41	20.25
		25	0	20.34	20.41	20.12
	64QAM	1	0	20.33	20.75	20.58
		1	13	20.33	20.77	20.59
		1	24	20.34	20.60	20.45
		12	0	19.39	19.36	19.26
		12	6	19.46	19.35	19.35
		12	11	19.33	19.28	19.27
		25	0	19.39	19.36	19.16

LTE Band / BW	Modulation	RB Sizet	RB Offset	Low CH	Mid CH	High CH
				132022CH	132322CH	132622CH
				1715MHz	1745MHz	1775MHz
66 / 10M	QPSK	1	0	22.53	22.63	22.41
		1	25	22.44	22.45	22.20
		1	49	22.50	22.27	22.22
		25	0	21.56	21.50	21.33
		25	13	21.50	21.41	21.28
		25	25	21.57	21.29	21.15
		50	0	21.49	21.40	21.30
	16QAM	1	0	21.61	21.93	21.42
		1	25	21.34	21.72	21.21
		1	49	21.41	21.58	21.23
		25	0	20.51	20.50	20.37
		25	13	20.51	20.42	20.34
		25	25	20.54	20.33	20.21
		50	0	20.46	20.44	20.32
	64QAM	1	0	20.93	20.69	20.60
		1	25	20.74	20.50	20.39
		1	49	20.77	20.38	20.39
		25	0	19.55	19.58	19.38
		25	13	19.54	19.52	19.33
		25	25	19.59	19.40	19.23
		50	0	19.51	19.49	19.28

LTE Band / BW	Modulation	RB Sizet	RB Offset	Low CH	Mid CH	High CH
				132047CH	132322CH	132597CH
				1717.5MHz	1745MHz	1772.5MHz
66 / 15M	QPSK	1	0	22.82	22.98	23.02
		1	38	22.31	22.52	22.34
		1	74	22.55	22.63	22.60
		36	0	21.56	21.66	21.54
		36	18	21.43	21.46	21.34
		36	39	21.34	21.39	21.35
		75	0	21.39	21.55	21.41
	16QAM	1	0	21.62	22.30	22.42
		1	38	21.14	21.81	21.74
		1	74	21.38	21.93	21.89
		36	0	20.55	20.71	20.47
		36	18	20.41	20.49	20.32
		36	39	20.35	20.45	20.27
		75	0	20.41	20.59	20.38
	64QAM	1	0	20.95	20.99	21.38
		1	38	20.38	20.48	20.74
		1	74	20.67	20.63	20.97
		36	0	19.60	19.77	19.50
		36	18	19.47	19.55	19.33
		36	39	19.38	19.47	19.33
		75	0	19.46	19.58	19.44

LTE Band / BW	Modulation	RB Sizet	RB Offset	Low CH	Mid CH	High CH
				132072CH	132322CH	132572CH
				1720MHz	1745MHz	1770MHz
66 / 20M	QPSK	1	0	23.29	23.20	23.22
		1	50	22.44	22.43	22.27
		1	99	22.86	22.71	22.61
		50	0	21.72	21.65	21.65
		50	25	21.52	21.45	21.32
		50	50	21.56	21.47	21.34
		100	0	21.59	21.74	21.54
	16QAM	1	0	22.80	22.51	22.48
		1	50	21.90	21.72	21.58
		1	99	22.37	22.02	21.94
		50	0	20.69	20.66	20.62
		50	25	20.50	20.43	20.31
		50	50	20.50	20.40	20.34
		100	0	20.58	20.62	20.53
	64QAM	1	0	21.61	21.87	21.34
		1	50	20.70	21.07	20.54
		1	99	21.16	21.21	20.82
		50	0	19.75	19.67	19.67
		50	25	19.63	19.45	19.36
		50	50	19.64	19.48	19.44
		100	0	19.64	19.68	19.57

EIRP (dBm):

Modulation	Band	WCDMA Band IV		
	Tx Channel	1312CH	1413CH	1513CH
	Frequency	1712.4MHz	1732.6MHz	1752.6MHz
QPSK	RMC 12.2K	25.63	25.55	25.50
	RMC 64K	25.64	25.56	25.52
	RMC 144K	25.65	25.54	25.49
	RMC 384K	25.65	25.55	25.52
	HSDPA Subtest-1	24.36	24.22	24.17
	HSDPA Subtest-2	24.38	24.24	24.19
	HSDPA Subtest-3	23.89	23.73	23.71
	HSDPA Subtest-4	23.93	23.75	23.71
	HSUPA Subtest-1	24.37	24.31	24.17
	HSUPA Subtest-2	22.38	22.34	22.20
	HSUPA Subtest-3	23.36	23.33	23.20
	HSUPA Subtest-4	22.41	22.36	22.22
	HSUPA Subtest-5	24.31	24.18	24.21

LTE Band / BW	Modulation	RB Size	RB Offset	Low CH	Mid CH	High CH
				19957CH	20175CH	20393CH
				1710.7MHz	1732.5MHz	1754.3MHz
4 / 1.4M	QPSK	1	0	25.35	25.32	25.19
		1	2	25.35	25.32	25.25
		1	5	25.30	25.24	25.18
		3	0	25.29	25.36	25.26
		3	1	25.36	25.37	25.29
		3	2	25.30	25.31	25.26
		6	0	24.35	24.32	24.27
	16QAM	1	0	24.46	24.42	24.65
		1	2	24.46	24.44	24.67
		1	5	24.42	24.37	24.31
		3	0	24.44	24.43	24.41
		3	1	24.47	24.45	24.43
		3	2	24.42	24.44	24.39
		6	0	23.59	23.49	23.48
	64QAM	1	0	23.53	23.53	23.50
		1	2	23.57	23.55	23.55
		1	5	23.45	23.52	23.48
		3	0	23.52	23.53	23.34
		3	1	23.58	23.53	23.53
		3	2	23.53	23.50	23.61
		6	0	22.68	22.63	22.33

LTE Band / BW	Modulation	RB Size	RB Offset	Low CH	Mid CH	High CH
				19965CH	20175CH	20385CH
				1711.5MHz	1732.5MHz	1753.5MHz
4 / 3M	QPSK	1	0	25.34	25.31	25.32
		1	7	25.40	25.35	25.40
		1	14	25.31	25.22	25.24
		8	0	24.47	24.40	24.33
		8	4	24.36	24.38	24.28
		8	7	24.34	24.35	24.36
		15	0	24.37	24.35	24.35
	16QAM	1	0	24.32	24.39	24.36
		1	7	24.35	24.47	24.48
		1	14	24.32	24.25	24.28
		8	0	23.60	23.46	23.39
		8	4	23.49	23.49	23.38
		8	7	23.47	23.43	23.46
		15	0	23.45	23.41	23.38
	64QAM	1	0	23.70	23.59	23.59
		1	7	23.64	23.63	23.70
		1	14	23.58	23.46	23.51
		8	0	22.56	22.37	22.38
		8	4	22.49	22.36	22.39
		8	7	22.37	22.33	22.40
		15	0	22.45	22.42	22.47

LTE Band / BW	Modulation	RB Size	RB Offset	Low CH	Mid CH	High CH
				19975CH	20175CH	20375CH
				1712.5MHz	1732.5MHz	1752.5MHz
4 / 5M	QPSK	1	0	25.50	25.54	25.44
		1	13	25.61	25.47	25.44
		1	24	25.38	25.31	25.29
		12	0	24.51	24.44	24.35
		12	6	24.52	24.43	24.39
		12	11	24.48	24.37	24.31
		25	0	24.46	24.38	24.34
	16QAM	1	0	24.55	24.65	24.54
		1	13	24.65	24.53	24.51
		1	24	24.50	24.46	24.41
		12	0	23.58	23.52	23.43
		12	6	23.59	23.49	23.49
		12	11	23.65	23.52	23.46
		25	0	23.55	23.46	23.42
	64QAM	1	0	23.40	23.80	23.70
		1	13	23.52	23.66	23.67
		1	24	23.34	23.56	23.54
		12	0	22.55	22.50	22.39
		12	6	22.54	22.48	22.50
		12	11	22.44	22.30	22.27
		25	0	22.45	22.36	22.31

LTE Band / BW	Modulation	RB Size	RB Offset	Low CH	Mid CH	High CH
				20000CH	20175CH	20350CH
				1715MHz	1732.5MHz	1750MHz
4 / 10M	QPSK	1	0	25.56	25.58	25.42
		1	25	25.36	25.29	25.24
		1	49	25.38	25.25	25.26
		25	0	24.55	24.50	24.34
		25	13	24.42	24.46	24.37
		25	25	24.41	24.39	24.33
		50	0	24.54	24.52	24.37
	16QAM	1	0	24.54	24.62	24.49
		1	25	24.23	24.33	24.29
		1	49	24.30	24.24	24.60
		25	0	23.61	23.53	23.40
		25	13	23.46	23.46	23.41
		25	25	23.43	23.39	23.37
		50	0	23.56	23.49	23.39
	64QAM	1	0	23.88	23.82	23.73
		1	25	23.62	23.54	23.50
		1	49	23.62	23.48	23.45
		25	0	22.59	22.56	22.47
		25	13	22.54	22.50	22.54
		25	25	22.47	22.44	22.40
		50	0	22.57	22.52	22.44

LTE Band / BW	Modulation	RB Size	RB Offset	Low CH	Mid CH	High CH
				20025CH	20175CH	20325CH
				1717.5MHz	1732.5MHz	1747.5MHz
4 / 15M	QPSK	1	0	26.02	26.02	25.93
		1	38	25.48	25.46	25.37
		1	74	25.68	25.64	25.61
		36	0	24.70	24.78	24.62
		36	18	24.50	24.54	24.39
		36	39	24.54	24.48	24.48
		75	0	24.62	24.57	24.52
	16QAM	1	0	24.82	24.82	25.21
		1	38	24.24	24.76	24.72
		1	74	24.96	24.90	24.82
		36	0	23.74	23.71	23.58
		36	18	23.53	23.54	23.41
		36	39	23.51	23.52	23.51
		75	0	23.61	23.58	23.57
	64QAM	1	0	24.19	24.17	24.08
		1	38	23.59	23.90	23.52
		1	74	23.71	24.12	23.77
		36	0	22.77	22.73	22.72
		36	18	22.56	22.55	22.51
		36	39	22.55	22.53	22.58
		75	0	22.69	22.59	22.65

LTE Band / BW	Modulation	RB Size	RB Offset	Low CH	Mid CH	High CH
				20050CH	20175CH	20300CH
				1720MHz	1732.5MHz	1740MHz
4 / 20M	QPSK	1	0	26.20	26.32	26.23
		1	50	25.36	25.41	25.38
		1	99	25.81	25.74	25.77
		50	0	24.74	24.92	24.82
		50	25	24.59	24.60	24.48
		50	50	24.61	24.57	24.59
		100	0	24.68	24.68	24.72
	16QAM	1	0	25.58	25.63	25.60
		1	50	24.72	24.73	24.70
		1	99	25.14	25.20	25.08
		50	0	23.79	23.89	23.81
		50	25	23.56	23.59	23.48
		50	50	23.52	23.55	23.55
		100	0	23.75	23.65	23.69
	64QAM	1	0	24.59	24.52	24.47
		1	50	23.73	23.68	23.62
		1	99	24.44	23.93	24.37
		50	0	22.80	22.96	22.80
		50	25	22.61	22.59	22.54
		50	50	22.60	22.61	22.61
		100	0	22.73	22.64	22.66

LTE Band / BW	Modulation	RB Size	RB Offset	Low CH	Mid CH	High CH
				20775CH	21100CH	21425CH
				2502.5MHz	2535MHz	2567.5MHz
7 / 5M	QPSK	1	0	25.07	25.32	25.63
		1	13	25.11	25.19	25.59
		1	24	25.04	25.12	25.48
		12	0	24.19	24.15	24.45
		12	6	24.19	24.10	24.48
		12	11	24.15	24.11	24.44
		25	0	24.16	24.08	24.47
	16QAM	1	0	24.20	24.41	25.03
		1	13	24.22	24.35	24.98
		1	24	24.16	24.28	24.88
		12	0	23.27	23.31	23.64
		12	6	23.24	23.30	23.63
		12	11	23.19	23.22	23.62
		25	0	23.11	23.12	23.54
	64QAM	1	0	23.06	23.66	23.80
		1	2	23.08	23.56	23.74
		1	5	23.02	23.31	23.63
		3	0	22.20	22.10	22.56
		3	1	22.17	22.07	22.54
		3	2	22.16	22.08	22.50
		6	0	22.09	22.07	22.48

LTE Band / BW	Modulation	RB Size	RB Offset	Low CH	Mid CH	High CH
				20800CH	21100CH	21400CH
				2505MHz	2535MHz	2565MHz
7 / 10M	QPSK	1	0	25.15	25.35	25.47
		1	25	25.00	25.09	25.40
		1	49	25.06	25.09	25.30
		25	0	24.21	24.27	24.41
		25	13	24.22	24.15	24.55
		25	25	24.21	24.27	24.48
		50	0	24.16	24.17	24.44
	16QAM	1	0	24.15	24.64	24.46
		1	25	23.90	24.36	24.41
		1	49	23.94	24.42	24.31
		25	0	23.16	23.26	23.44
		25	13	23.20	23.12	23.58
		25	25	23.16	23.27	23.50
		50	0	23.07	23.15	23.42
	64QAM	1	0	23.51	23.43	23.70
		1	25	23.29	23.17	23.60
		1	49	23.35	23.22	23.49
		25	0	22.16	22.31	22.51
		25	13	22.20	22.20	22.60
		25	25	22.20	22.31	22.56
		50	0	22.11	22.16	22.44

LTE Band / BW	Modulation	RB Size	RB Offset	Low CH	Mid CH	High CH
				20825CH	21100CH	21375CH
				2507.5MHz	2535MHz	2562.5MHz
7 / 15M	QPSK	1	0	25.26	25.63	25.70
		1	38	24.98	25.26	25.26
		1	74	25.01	25.29	25.35
		36	0	24.04	24.39	24.43
		36	18	23.98	24.27	24.30
		36	39	24.02	24.25	24.28
		75	0	23.97	24.31	24.29
	16QAM	1	0	24.05	24.93	24.96
		1	38	23.75	24.56	24.63
		1	74	23.83	24.61	24.61
		36	0	23.00	23.40	23.50
		36	18	22.98	23.27	23.42
		36	39	23.02	23.25	23.37
		75	0	22.98	23.33	23.39
	64QAM	1	0	23.40	23.72	24.04
		1	38	23.09	23.32	23.64
		1	74	23.18	23.34	23.75
		36	0	22.01	22.47	22.38
		36	18	22.00	22.33	22.29
		36	39	22.02	22.29	22.24
		75	0	22.04	22.31	22.36

LTE Band / BW	Modulation	RB Size	RB Offset	Low CH	Mid CH	High CH
				20850CH	21100CH	21350CH
				2510MHz	2535MHz	2560MHz
7 / 20M	QPSK	1	0	25.40	25.68	25.80
		1	50	25.02	25.16	25.16
		1	99	25.17	25.29	25.28
		50	0	24.18	24.41	24.50
		50	25	24.11	24.28	24.28
		50	50	24.09	24.31	24.27
		100	0	24.21	24.37	24.32
	16QAM	1	0	24.86	25.01	25.08
		1	50	24.41	24.46	24.49
		1	99	24.57	24.59	24.60
		50	0	23.10	23.39	23.45
		50	25	23.03	23.26	23.25
		50	50	23.05	23.30	23.21
		100	0	23.12	23.35	23.35
	64QAM	1	0	23.70	24.28	24.05
		1	50	23.25	23.79	23.41
		1	99	23.43	23.89	23.54
		50	0	22.14	22.46	22.55
		50	25	22.06	22.32	22.34
		50	50	22.09	22.35	22.29
		100	0	22.15	22.36	22.37

LTE Band / BW	Modulation	RB Size	RB Offset	Low CH	Mid CH	High CH
				39675CH	40620CH	41565CH
				2498.5MHz	2593MHz	2687.5MHz
41 / 5M	QPSK	1	0	25.78	26.28	26.05
		1	13	25.95	26.30	26.11
		1	24	25.77	26.14	25.98
		12	0	24.94	25.36	25.16
		12	6	24.93	25.33	25.12
		12	11	24.83	25.19	25.03
		25	0	24.84	25.30	25.09
	16QAM	1	0	25.25	25.50	25.36
		1	13	25.33	25.54	25.38
		1	24	25.23	25.34	25.24
		12	0	23.97	24.36	24.06
		12	6	23.98	24.38	24.07
		12	11	23.95	24.26	23.97
		25	0	23.86	24.31	24.12
	64QAM	1	0	24.19	24.89	24.57
		1	13	24.28	24.95	24.63
		1	24	24.10	24.70	24.55
		12	0	22.87	23.42	23.20
		12	6	22.83	23.38	23.19
		12	11	22.86	23.22	23.12
		25	0	22.77	23.39	22.99

LTE Band / BW	Modulation	RB Size	RB Offset	Low CH	Mid CH	High CH
				39700CH	40620CH	41540CH
				2501MHz	2593MHz	2685MHz
41 / 10M	QPSK	1	0	25.84	26.33	26.27
		1	25	25.77	26.25	25.89
		1	49	25.73	26.18	25.91
		25	0	25.01	25.39	25.31
		25	13	24.93	25.31	25.11
		25	25	24.95	25.23	24.99
		50	0	25.00	25.37	25.09
	16QAM	1	0	25.11	25.71	25.55
		1	25	25.11	25.67	25.35
		1	49	24.98	25.56	25.31
		25	0	23.91	24.38	24.25
		25	13	23.92	24.37	24.10
		25	25	23.90	24.22	23.98
		50	0	23.91	24.35	24.16
	64QAM	1	0	23.75	24.84	24.53
		1	25	23.71	24.83	24.22
		1	49	23.64	24.66	24.20
		25	0	22.98	23.31	23.19
		25	13	22.96	23.29	23.03
		25	25	22.93	23.19	22.89
		50	0	22.92	23.28	23.07

LTE Band / BW	Modulation	RB Size	RB Offset	Low CH	Mid CH	High CH
				39725CH	40620CH	41515CH
				2503.5MHz	2593MHz	2682.5MHz
41 / 15M	QPSK	1	0	26.05	26.73	26.67
		1	38	25.71	26.35	26.28
		1	74	25.88	26.30	26.24
		36	0	24.97	25.39	25.43
		36	18	24.83	25.37	25.24
		36	39	24.75	25.30	25.16
		75	0	24.89	25.31	25.25
	16QAM	1	0	25.27	26.10	25.87
		1	38	24.95	25.66	25.43
		1	74	25.15	25.65	25.48
		36	0	23.93	24.38	24.38
		36	18	23.79	24.36	24.24
		36	39	23.74	24.21	24.10
		75	0	23.86	24.25	24.24
	64QAM	1	0	23.81	25.29	24.62
		1	38	23.55	24.71	24.19
		1	74	23.70	24.78	24.24
		36	0	23.05	23.45	23.27
		36	18	22.89	23.39	23.14
		36	39	22.79	23.28	23.07
		75	0	22.88	23.22	23.26

LTE Band / BW	Modulation	RB Size	RB Offset	Low CH	Mid CH	High CH
				39750CH	40620CH	41490CH
				2506MHz	2593MHz	2680MHz
41 / 20M	QPSK	1	0	26.37	26.88	26.69
		1	50	25.98	26.32	26.20
		1	99	26.09	26.50	26.34
		50	0	25.17	25.59	25.54
		50	25	25.11	25.39	25.29
		50	50	25.13	25.32	25.34
		100	0	25.14	25.48	25.38
	16QAM	1	0	25.65	25.91	25.77
		1	50	25.25	25.37	25.26
		1	99	25.28	25.52	25.39
		50	0	24.14	24.52	24.42
		50	25	24.08	24.33	24.17
		50	50	24.09	24.27	24.17
		100	0	24.16	24.42	24.27
	64QAM	1	0	24.99	24.94	25.05
		1	50	24.68	24.47	24.54
		1	99	24.71	24.59	24.60
		50	0	23.19	23.53	23.47
		50	25	23.12	23.41	23.30
		50	50	23.13	23.26	23.27
		100	0	23.08	23.41	23.32