MEASUREMENT REPORT

FCC PART 15.255

FCC ID: 2AYX4-PER200

Applicant: WeLink Communications LLC

Application Type: Certification

Product: Peraso 60 GHz radio Module. Quetzal based

Model No.: PER_200

Brand Name: WeLink Communications LLC

FCC Classification: Part 15 Low Power Transceiver, Rx Verified (DXT)

FCC Rule Part(s): FCC PART 15.255

Test Procedure(s): ANSI C63.10-2013

Test Date: March 13 ~ 24, 2021

Reviewed By: Vincent Yu

Vincent Yu

Approved By: Robin Wu

Robin Wu

ilac-MRA

ACCREDITED
TESTING LABORATORY
CERTIFICATE #3628.01

The test results relate only to the samples tested.

This equipment has been shown to be capable of compliance with the applicable technical standards as indicated in the measurement report and was tested in accordance with the measurement procedures specified in ANSI C63.10-2013. Test results reported herein relate only to the item(s) tested.

The test report shall not be reproduced except in full without the written approval of MRT Technology (Suzhou) Co., Ltd.

Revision History

Report No.	Version	Description	Issue Date	Note
2103RSU022-U1	Rev. 01	Initial Report	03-30-2021	Invalid
2103RSU022-U1	Rev. 02	Modification	04-07-2021	Valid

CONTENTS

Description Page

1. GENERAL INFORMATION 5

1.1. Applicant 5
1.2. Manufacturer 5
1.3. Testing Facility 5

2. PRODUCT INFORMATION 6

2.1. Equipment Description 6
2.2. Test Mode 6
2.3. Operation Frequency and Channel List 6
2.4. Test Environment Condition 6
2.5. Description of Test Software 6

3. ANTENNA REQUIREMENTS 7

4. TEST EQUIPMENT CALIBRATION DATA 8

5. MEASUREMENT UNCERTAINTY 9

6. TEST RESULT 10

6.1. Summary 10
6.2. 6dB Occupied Bandwidth 11
6.2.1. Test Limit 11
6.2.2. Test Procedure used 11
6.2.3. Test Setting 11
6.2.4. Test Setup 11
6.2.5. Test Result 12
6.3. EIRP Power 13
6.3.1. Test Limit 13
6.3.2. Test Procedure used 13
6.3.3. Test Setting 13
6.3.4. Test Setup 14
6.3.5. Test Result 15
6.4. Conducted Output Power 17
6.4.1. Test Limit 17
6.4.2. Test Procedure used 17
6.4.3. Test Procedure 17
6.4.4. Test Setup 17
6.4.5. Test Result 18

6.5. Transmitter Spurious Emissions 19
6.5.1. Test Limit 19
6.5.2. Test Procedure used 19
6.5.3. Test Procedure 19
6.5.4. Test Setup 21
6.5.5. Test Result 23
6.6. Frequency Stability 27
6.6.1. Test Limit 27
6.6.2. Test Procedure used 27
6.6.3. Test Procedure 27
6.6.4. Test Setup 27
6.6.5. Test Result 28
6.7. Group Installation 29
6.7.1. Test Limit 29
6.7.2. Test Procedure used 29
6.7.3. Test Procedure 29
6.7.4. Test Setup 29
6.7.5. Test Result 29
6.8. AC Conducted Emissions Measurement 30
6.8.1. Test Limit 30
6.8.2. Test Setup 30
6.8.3. Test Result 31

7. CONCLUSION 33

Appendix A - Test Setup Photograph 34

Appendix B - EUT Photograph 35

1. GENERAL INFORMATION

1.1. Applicant

WeLink Communications LLC
1881 W Traverse PKWY, Lehi UT, 84043

1.2. Manufacturer

Shenzhen Jaguar Wave Technology LTD
Unit 1002/1003, Block 2A, Tongtai Times Center, No.6259 Baoan Road, Fuhai Street, Baoan District, Shenzhen City, P.R.China

1.3. Testing Facility

☒	**Test Site – MRT Suzhou Laboratory**	
	Laboratory Location (Suzhou - Wuzhong)	
	D8 Building, No.2 Tian'edang Rd., Wuzhong Economic Development Zone, Suzhou, China	
	Laboratory Location (Suzhou - SIP)	
	4b Building, Liando U Valley, No.200 Xingpu Rd., Shengpu Town, Suzhou Industrial Park, China	
	Laboratory Accreditations	
	A2LA: 3628.01	CNAS: L10551
	FCC: CN1166	ISED: CN0001
	VCCI: R-20025, G-20034, C-20020, T-20020	
☐	**Test Site – MRT Shenzhen Laboratory**	
	Laboratory Location (Shenzhen)	
	1G, Building A, Junxiangda Building, Zhongshanyuan Road West, Nanshan District, Shenzhen, China	
	Laboratory Accreditations	
	A2LA: 3628.02	CNAS: L10551
	FCC: CN1284	ISED: CN0105
☐	**Test Site – MRT Taiwan Laboratory**	
	Laboratory Location (Taiwan)	
	No. 38, Fuxing 2nd Rd., Guishan Dist., Taoyuan City 333, Taiwan (R.O.C.)	
	Laboratory Accreditations	
	TAF: L3261-190725	
	FCC: 291082, TW3261	ISED: TW3261

2. PRODUCT INFORMATION

2.1. Equipment Description

Product Name	Peraso 60 GHz radio Module. Quetzal based
Model No.	PER_200
Working Frequency	58.32GHz ~ 64.80GHz
Channel Space	2.16GHz
Channel Number	4
Date Rate	MCS1 ~ MCS9
Hardware Version	PER_200
Software Version	3.5.3317092
Antenna Gain	8dBi

Note: Above information is declared by manufacturer.

2.2. Test Mode

Test Mode	Mode 1: Transmit by 58.32GHz (MCS 1)
	Mode 2: Transmit by 60.48GHz (MCS 1)
	Mode 4: Transmit by 64.80GHz (MCS 1)

2.3. Operation Frequency and Channel List

Channel	Frequency	Channel	Frequency
1	58.32 GHz	2	60.48 GHz
3	62.64 GHz	4	64.80 GHz

2.4. Test Environment Condition

Ambient Temperature	15°C ~ 35°C
Relative Humidity	20%RH ~ 75%RH

2.5. Description of Test Software

The test utility software used during testing was “teraterm.exe”, and the version was “4.74”

3. ANTENNA REQUIREMENTS

Excerpt from §15.203 of the FCC Rules/Regulations:

"An intentional radiator antenna shall be designed to ensure that no antenna other than that furnished by the responsible party can be used with the device. The use of a permanently attached antenna or of an antenna that uses a unique coupling to the intentional radiator shall be considered sufficient to comply with the provisions of this section."

- The antenna of this device is **permanently attached.**
- There are no provisions for connection to an external antenna.

Conclusion:

The unit complies with the requirement of §15.203.

4. TEST EQUIPMENT CALIBRATION DATA

Radiated Emission Test (SIP-AC2)

Instrument	Manufacturer	Type No.	Asset No.	Cali. Interval	Cali. Due Date
EMI Test Receiver	R&S	ESR3	MRTSUE06613	1 year	2021/07/02
EXA Signal Analyzer	Keysight	N9030B	MRTSUE06395	1 year	2021/09/03
Bilog Period Antenna	Schwarzbeck	VULB9168	MRTSUE06646	1 year	2021/08/30
Horn Antenna	Schwarzbeck	BBHA9120D	MRTSUE06648	1 year	2021/11/26
Broad Band Horn Antenna	Schwarzbeck	BBHA 9170	MRTSUE06024	1 year	2021/12/14
Microwave System Amplifier	Agilent	83017A	MRTSUE06076	1 year	2021/11/14
Preamplifier	EMCI	EMC051845SE	MRTSUE06644	1 year	2021/11/13
Micro-Wave Antenna	MI-WWAVE	261U-25	MRTSUE06273	N/A	N/A
Micro-Wave Antenna	MI-WWAVE	261E-25	MRTSUE06276	N/A	N/A
Micro-Wave Antenna	MI-WWAVE	261F-25	MRTSUE06275	N/A	N/A
Micro-Wave Antenna	MI-WWAVE	261G	MRTSUE06274	N/A	N/A
Standard Gain Horn Antenna	A-INFOMW	LB-10-25-A	MRTSUE06410	N/A	N/A
Standard Gain Horn Antenna	A-INFOMW	LB-15-25-A	MRTSUE06409	N/A	N/A
Waveguide Harmonic Mixer	Keysight	M1970V	MRTSUE06271	N/A	N/A
Waveguide Harmonic Mixer	Keysight	M1970W	MRTSUE06272	N/A	N/A
RF Signal Generator	Keysight	E8257D	MRTSUE06453	N/A	N/A
SA Extension Module	Keysight	N9029AV06	MRTSUE06368	N/A	N/A
SA Extension Module	Keysight	N9029AV05	MRTSUE06367	N/A	N/A
SA Extension Module	Keysight	N9029AV03	MRTSUE06366	N/A	N/A
Millimeter wave signal source frequency expander	Keysight	E8257DV15	MRTSUE06456	N/A	N/A
RF Detector	SAGE	STD-15SF-NI	MRTSUE06466	N/A	N/A
Oscilloscope	Agilent	DSO-X 6002A	MRTSUE06107	1 year	2021/04/14
Thermal Hygrometer	testo	608-H1	MRTSUE06624	1 year	2021/12/28
Anechoic Chamber	RIKEN	SIP-AC2	MRTSUE06781	1 year	2021/12/24

AC Conducted Emission Test (SIP-SR2)

Instrument	Manufacturer	Type No.	Asset No.	Cali. Interval	Cali. Due Date
EMI Test Receiver	R&S	ESR3	MRTSUE06613	1 year	2021/07/02
Two-Line V-Network	R&S	ENV216	MRTSUE06003	1 year	2021/09/09
Thermal Hygrometer	testo	608-H1	MRTSUE06621	1 year	2021/12/28

Software	Version	Function
EMI Software	V3	EMI Test Software

5. MEASUREMENT UNCERTAINTY

Where relevant, the following test uncertainty levels have been estimated for tests performed on the EUT as specified in CISPR 16-4-2. This uncertainty represents an expanded uncertainty expressed at approximately the 95% confidence level using a coverage factor of k = 2.

AC Conducted Emission Measurement
Measurement Uncertainty for a Level of Confidence of 95% (U=2Uc(y)): 9kHz~150kHz: 3.74dB 150kHz~30MHz: 3.44dB
Radiated Disturbance
Measurement Uncertainty for a Level of Confidence of 95% (U=2Uc(y)): Horizontal: 30MHz~300MHz: 5.04dB 300MHz~1GHz: 4.95dB 1GHz~40GHz: 6.40dB Vertical: 30MHz~300MHz: 5.24dB 300MHz~1GHz: 6.03dB 1GHz~40GHz: 6.40dB

6. TEST RESULT

6.1. Summary

FCC Part Section(s)	Test Description	Test Limit	Test Condition	Test Result	Reference
15.255(e)	6dB Occupied Bandwidth	N/A	Radiated	Pass	Section 6.2
15.255(c)	EIRP Power	Average Power < 40dBm Peak Power < 43dBm		Pass	Section 6.3
15.255(e)	Conducted Output Power	< 500mW		Pass	Section 6.4
15.255(d)	Transmitter Spurious Emissions	Refer to Section 6.5		Pass	Section 6.5
15.255(f)	Frequency stability	Within the frequency band 57-71GHz		Pass	Section 6.6
15.255(h)	Group Installation	Refer to Section 6.7	N/A	Pass	Section 6.7
15.207	AC Conducted Emissions 150kHz - 30MHz	< FCC 15.207 limits	Line Conducted	Pass	Section 6.8

Notes: The radiation measurements are performed in X, Y, Z axis positioning. Only the worst-case data is shown in the report.

6.2. 6dB Occupied Bandwidth

6.2.1. Test Limit

N/A

6.2.2. Test Procedure used

ANSI C63.10-2013 Section 9.3

6.2.3. Test Setting

1. Span = approximately two times to three times the EBW, centered on the carrier frequency
2. RBW = 100kHz
3. VBW = 300kHz
4. Detector function = Peak
5. Sweep time = auto
6. Trace mode = max hold.
7. The EUT shall be transmitting at its maximum data rate. Allow the trace to stabilize.
8. Use the marker-to-peak function to set the marker to the peak of the emission. Use the marker-delta function to measure the specified dB down one side of the emission.
9. Reset the marker-delta function and move the marker to the other side of the emission until the delta marker amplitude is at the same level as the reference marker amplitude. The marker- delta frequency reading at this point is the specified emission bandwidth.

6.2.4. Test Setup

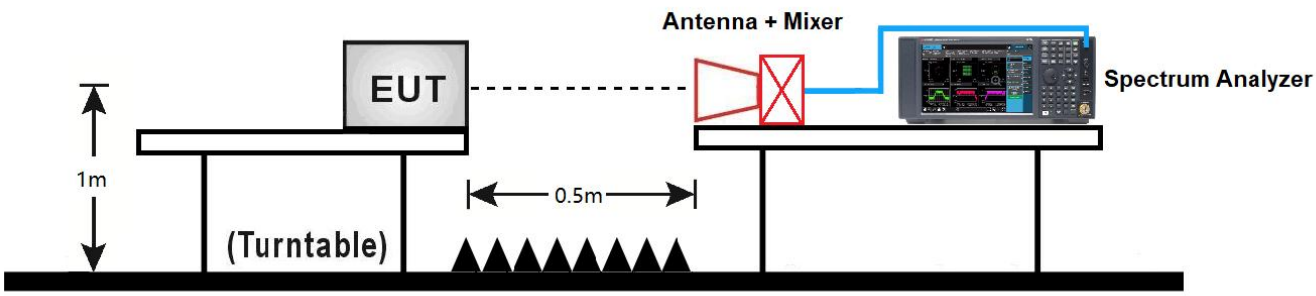

6.2.5. Test Result

Test Site	SIP-AC2	Test Engineer	Andy Zhu
Test Date	2021/03/13		

Channel No.	Frequency (GHz)	Date Rate	6dB Bandwidth (GHz)
1	58.32	MCS 1	1.67
2	60.48	MCS 1	1.68
4	64.80	MCS 1	1.79

6dB Bandwidth

Channel 1 (58.32GHz)

Channel 2 (60.48GHz)

Channel 4 (64.80GHz)

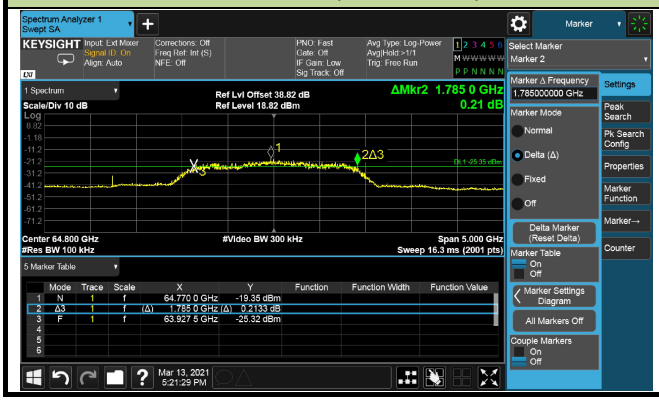

6.3. EIRP Power

6.3.1.Test Limit

The average power of any emission shall not exceed 40dBm and the peak power of any emission shall not exceed 43dBm.

6.3.2.Test Procedure used

ANSI C63.10-2013 Section 9.11

Note: Far-field boundary calculation as below.

According to ANSI C63.10-2013, Clause 9, for mm-wave measurements, L >> λ and a more suitable formula for the far-field boundary distance: $R_{(Far\ Field)} = 2L^2/\lambda$

- L is the largest antenna dimension of the transmit antenna in m
- λ is the wavelength in m

Far-field boundary calculation				
Channel No.	Frequency (GHz)	λ (m)	L (m)	$R_{(Far\ Field)}$ (m)
1	58.32	0.0051	0.008	0.025
2	60.48	0.0050	0.008	0.026
3	62.64	0.0048	0.008	0.027
4	64.80	0.0046	0.008	0.028

The measurement was performed at a minimum distance of 0.30m > $R_{(Far\ Field)}$

6.3.3.Test Setting

1. Connect the test antenna for the fundamental frequency band to the mm-wave RF detector. Place the test horn in the main beam of the EUT at 0.3m. Connect the video output of the detector to the 50Ω input of a DSO. Set the sampling rate of the DSO to at least twice the cutoff frequency of any LPF used or to at least twice the signal bandwidth without a LPF. Adjust the memory depth, the triggering, and the sweep speed to obtain a display that is representative of the signal considering the type of modulation.
2. Record the average and peak voltages from the DSO.
3. Replace the EUT with mm-wave source to the RF input port of the instrumentation system. The mm-wave source shall be unmodulated.
4. Adjust the frequency of the mm-wave source to the center of the frequency range occupied by the transmitter. Adjust the amplitude of the mm-wave source such that the DSO indicates a voltage equal to the peak voltage recorded in step 2.

5. Without changing any settings, replace the DSO with the mm-wave power meter. Measure and note the power.

6. Repeat step 4 and step 5 for the average voltage recorded in step 2.

6.3.4.Test Setup

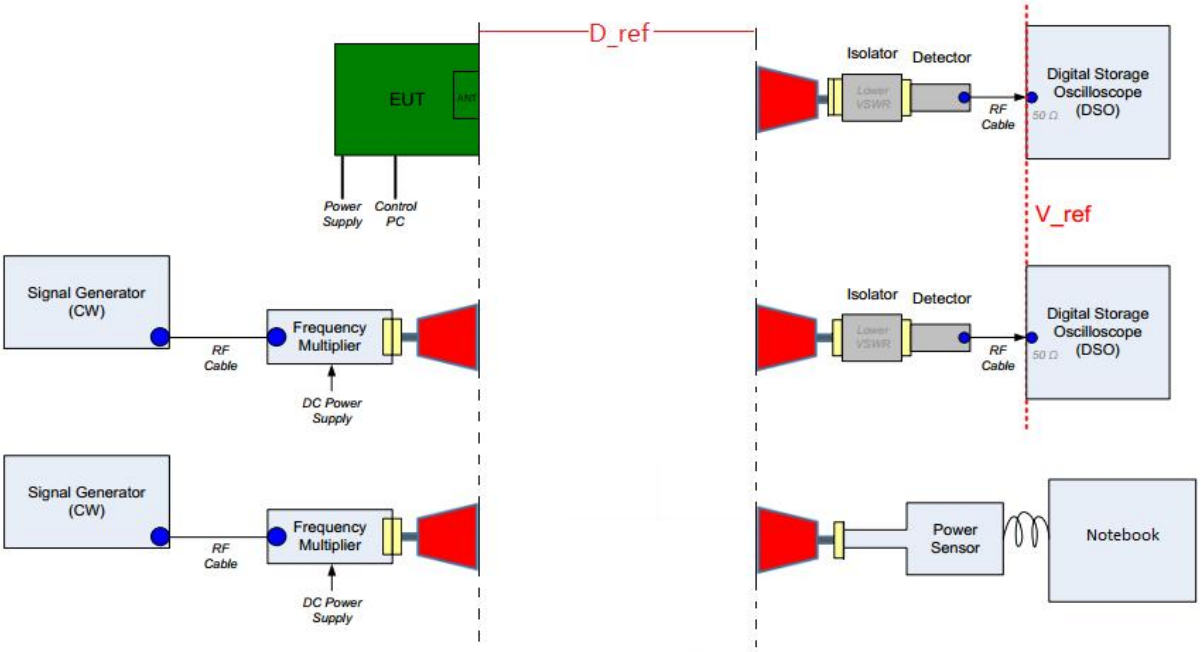

6.3.5.Test Result

Power output test was verified over all data rates, and then choose the maximum power output (Gray Marker) for final test of each channel.

Output power at various data rates for Channel 1 (58.32GHz):

Channel No.	Frequency (GHz)	Date Rate	Average EIRP (dBm)
1	58.32	MCS 1	16.88
		MCS 2	16.81
		MCS 3	16.72
		MCS 4	16.79
		MCS 5	16.69
		MCS 6	16.72
		MCS 7	16.63
		MCS 8	16.67
		MCS 9	16.51

Test Site	SIP-AC2	Test Engineer	Andy Zhu
Test Date	2021/03/19		

Channel No.	Frequency (GHz)	Date Rate	D (m)	Measured Voltage (mV)	P_R (dBm)	G_R (dBi)	EIRP (W)	EIRP (dBm)	Limit (dBm)	Result
Peak EIRP										
1	58.32	MCS 1	0.30	-42.59	-10.94	24.49	0.1537	21.87	43	Pass
2	60.48	MCS 1	0.30	-57.31	-8.71	24.34	0.2859	24.56	43	Pass
4	64.80	MCS 1	0.30	-17.72	-17.14	24.79	0.0425	16.28	43	Pass
Average EIRP										
1	58.32	MCS 1	0.30	-24.53	-15.92	24.49	0.0488	16.88	40	Pass
2	60.48	MCS 1	0.30	-39.26	-12.98	24.34	0.1070	20.29	40	Pass
4	64.80	MCS 1	0.30	-8.08	-22.70	24.79	0.0118	10.72	40	Pass

Note:

The measured power level (P_R) is converted to EIRP using Friis equation:

$$EIRP\ (W) = P_T * G_T = (P_R / G_R) * (4 * Pi * D / \lambda)^2$$

- P_R is the equivalent power measured at the output of the test antenna, in W
- λ is the wavelength of the emission under investigation, in m
- G_R is the linear gain of the test antenna, $G_{R\ (Numeric)} = 10^{(dBi\ /\ 10)}$
- D is the measurement distance, in m

6.4. Conducted Output Power

6.4.1.Test Limit

The peak transmitter conducted output power shall not exceed 500mW.

Transmitters with an emission bandwidth of less than 100 MHz must limit their peak transmitter conducted output power to the product of 500mW times their emission bandwidth divided by 100MHz.

6.4.2.Test Procedure used

ANSI C63.10-2013 Section 9.11

6.4.3.Test Procedure

For peak measurements, calculate the peak conducted output power from the peak EIRP using below equation:

$$P_{cond} = EIRP_{Linear} / G_{EUT}$$

Where

P_{cond} is the conducted output power, in W

$EIRP_{Linear}$ is the equivalent isotropically radiated power, in W

G_{EUT} is numeric gain of the EUT radiating element (antenna)

6.4.4.Test Setup

N/A

6.4.5.Test Result

Test Site	SIP-AC2	Test Engineer	Andy Zhu
Test Date	2021/03/19		

Channel No.	Frequency (GHz)	Date Rate	Peak EIRP (dBm)	EUT Antenna Gain (dBi)	Output Power (dBm)	Output Power (mW)	Limit (mW)	Result
1	58.32	MCS 1	21.87	8.00	13.87	24.38	500	Pass
2	60.48	MCS 1	24.56	8.00	16.56	45.29	500	Pass
4	64.80	MCS 1	16.28	8.00	8.28	6.73	500	Pass

Note: The 6dB Bandwidth is greater than 100MHz, so the limit of the Output Power is 500mW.

6.5. Transmitter Spurious Emissions

6.5.1.Test Limit

Limits on spurious emissions:

1. Radiated emissions below 40 GHz shall not exceed the general limits in §15.209.
2. Between 40 GHz and 200 GHz, the level of these emissions shall not exceed 90pW/cm^2 at a distance of 3 meters.
3. The levels of the spurious emissions shall not exceed the level of the fundamental emission.

FCC Part 15.209 Limit		
Frequency (MHz)	Field Strength (uV/m)	Measurement Distance (m)
0.009 ~ 0.490	2400/F(kHz)	300
0.490 ~ 1.705	24000/F(kHz)	30
1.705 ~ 30.0	30	30
30 ~ 80	100**	3
80 ~ 216	150**	3
216 ~ 960	200**	3
Above 960	500	3
Note 1: The lower limit shall apply at the transition frequency. Note 2: Distance refers to the distance in meters between the measuring instrument antenna and the closed point of any part of the device or system. Note 3: E field strength (dBμV/m) = 20 log E field strength (uV/m).		

6.5.2.Test Procedure used

ANSI C63.10-2013 Section 9.12 and Section 9.13

6.5.3.Test Procedure

<u>Measurement of harmonic and spurious emissions above 40 GHz</u>

1. Connect the test antenna covering the appropriate frequency range to a spectrum analyzer via an external mixer.
2. Set spectrum analyzer RBW = 1MHz, VBW = 3MHz, average detector.
3. Maximize all observed emissions. Note the maximum power indicated on the spectrum analyzer. Adjust this reading, if necessary, by the conversion loss of the external mixer used at the frequency under investigation and the external mixer IF cable loss.
4. Calculate the maximum field strength of the emission at the measurement distance
5. Calculate the power density at the distance specified by the limit from the field strength at the distance specified by the limit

6. Repeat the preceding sequence for every emission observed in the frequency band under investigation.

Measurement of harmonic and spurious emissions below 40 GHz

1. Analyzer center frequency was set to the frequency of the radiated spurious emission of interest
2. RBW = as specified in Table 1
3. VBW = 3MHz
4. Detector = peak
5. Sweep time = auto couple
6. Trace mode = max hold
7. Trace was allowed to stabilize

Table 1 - RBW as a function of frequency

Frequency	RBW
9 ~ 150 kHz	200 ~ 300 Hz
0.15 ~ 30 MHz	9 ~ 10 kHz
30 ~ 1000 MHz	100 ~ 120 kHz
> 1000 MHz	1 MHz

Average Field Strength Measurements

1. Analyzer center frequency was set to the frequency of the radiated spurious emission of interest
2. RBW = 1MHz
3. VBW ≥ 1/T
4. As an alternative, the instrument may be set to linear detector mode. Ensure that video filtering is applied in linear voltage domain (rather than in a log or dB domain). Some instruments require linear display mode in order to accomplish this. Others have a setting for Average-VBW Type, which can be set to “Voltage” regardless of the display mode
5. Detector = Peak
6. Sweep time = auto
7. Trace mode = max hold
8. Allow max hold to run for at least 50 times (1/duty cycle) traces

6.5.4.Test Setup

Below 1GHz Test Setup:

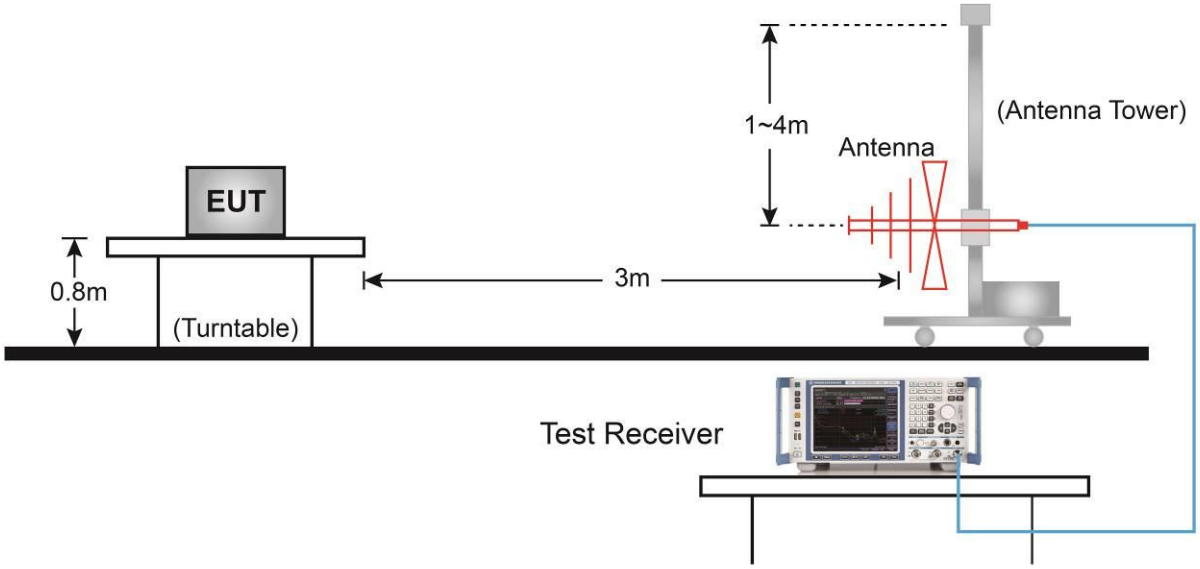

1GHz ~ 40GHz Test Setup:

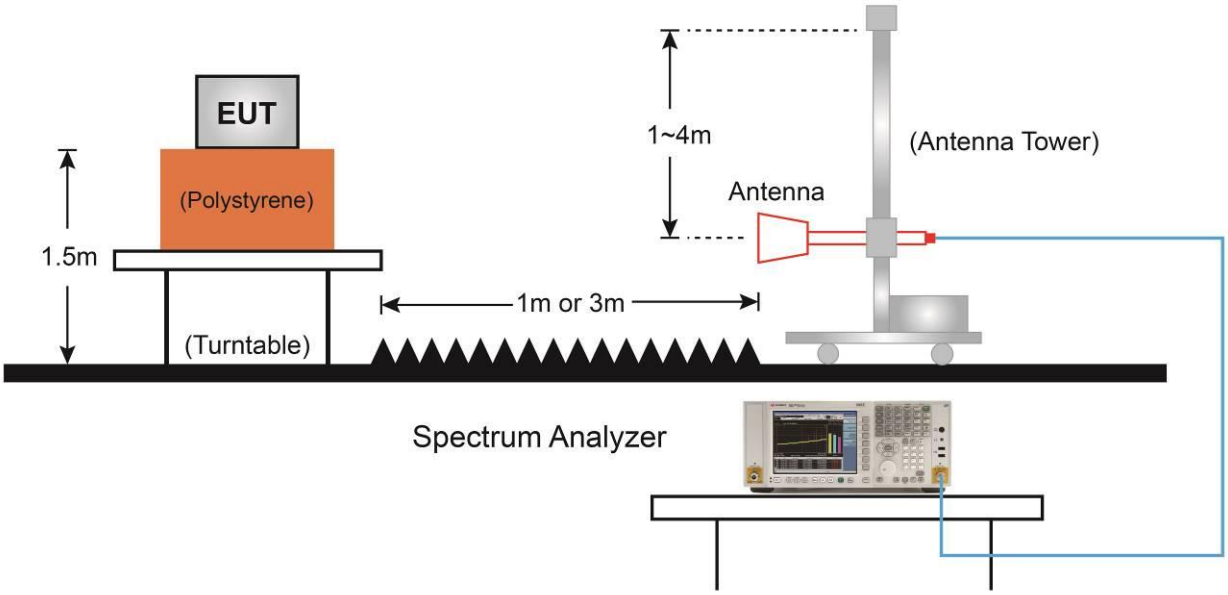

Above 40GHz Test Setup:

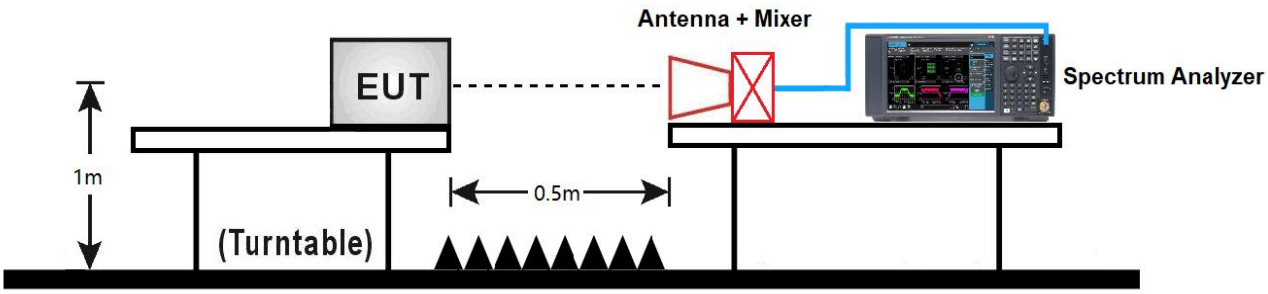

6.5.5.Test Result

Test Site	SIP-AC2	Test Engineer	Andy Zhu
Test Date	2021/03/14		
Remark	1GHz ~ 40GHz		

Frequency (MHz)	Reading Level (dBμV)	Factor (dB)	Measure Level (dBμV/m)	Limit (dBμV/m)	Margin (dB)	Detector	Polarization
Channel 1 (58.32GHz)							
22565.0	58.0	-9.7	48.3	74.0	-25.7	Peak	Horizontal
22873.0	57.7	-9.2	48.5	74.0	-25.5	Peak	Horizontal
26822.0	57.1	-7.5	49.6	74.0	-24.4	Peak	Horizontal
31057.0	59.3	-9.6	49.7	74.0	-24.3	Peak	Horizontal
22356.0	57.1	-9.8	47.3	74.0	-26.7	Peak	Vertical
22609.0	56.9	-9.6	47.3	74.0	-26.7	Peak	Vertical
26833.0	56.6	-7.4	49.2	74.0	-24.8	Peak	Vertical
31057.0	59.8	-9.6	50.2	74.0	-23.8	Peak	Vertical
Channel 2 (60.48GHz)							
22235.0	56.7	-9.6	47.1	74.0	-26.9	Peak	Horizontal
22796.0	57.6	-9.5	48.1	74.0	-25.9	Peak	Horizontal
26624.0	57.0	-8.4	48.6	74.0	-25.4	Peak	Horizontal
29143.0	58.9	-9.7	49.2	74.0	-24.8	Peak	Horizontal
22290.0	56.4	-9.6	46.8	74.0	-27.2	Peak	Vertical
22752.0	56.4	-9.0	47.4	74.0	-26.6	Peak	Vertical
26822.0	58.0	-7.5	50.5	74.0	-23.5	Peak	Vertical
29792.0	59.1	-9.5	49.6	74.0	-24.4	Peak	Vertical
Channel 4 (64.80GHz)							
22345.0	57.2	-9.8	47.4	74.0	-26.6	Peak	Horizontal
22752.0	56.5	-9.0	47.5	74.0	-26.5	Peak	Horizontal
26833.0	55.9	-7.4	48.5	74.0	-25.5	Peak	Horizontal
30012.0	59.0	-9.6	49.4	74.0	-24.6	Peak	Horizontal
22213.0	56.1	-9.6	46.5	74.0	-27.5	Peak	Vertical
22697.0	57.3	-9.1	48.2	74.0	-25.8	Peak	Vertical
26965.0	56.4	-7.8	48.6	74.0	-25.4	Peak	Vertical
29902.0	59.1	-9.8	49.3	74.0	-24.7	Peak	Vertical

Note 1: Measure Level (dBμV/m) = Reading Level (dBμV) + Factor (dB)

Factor (dB) = Cable Loss (dB) + Antenna Factor (dB/m) - Pre_Amplifier Gain (dB)

Note 2: Average measurement was not performed when the peak level lower than average limit.

Test Site	SIP-AC2	Test Engineer	Andy Zhu
Test Date	2021/03/14		
Remark	40GHz ~ 200GHz		

Frequency (GHz)	Reading Level @0.5m (dBμV)	Factor (dB)	Measure Level @0.5m (dBμV/m)	Measure Level @3m (dBμV/m)	Power Density (pW/cm^2)	Limit (pW/cm^2)	Result
Channel 1 (58.32GHz)							
49.2	10.8	45.8	56.6	41.0	0.0	90.0	Pass
69.8	49.1	42.1	91.2	75.6	9.6	90.0	Pass
83.5	29.7	44.3	74.0	58.4	0.2	90.0	Pass
116.6	2.7	58.0	60.7	45.1	0.0	90.0	Pass
175.0	4.6	60.1	64.7	49.1	0.0	90.0	Pass
Channel 2 (60.48GHz)							
49.1	10.3	45.7	56.0	40.4	0.0	90.0	Pass
72.7	48.2	42.4	90.6	75.0	8.4	90.0	Pass
81.6	36.5	44.2	80.7	65.1	0.9	90.0	Pass
121.0	2.5	57.2	59.7	44.1	0.0	90.0	Pass
181.4	4.6	60.8	65.4	49.8	0.0	90.0	Pass
Channel 4 (64.80GHz)							
49.0	9.4	46.3	55.7	40.1	0.0	90.0	Pass
51.8	36.6	40.9	77.5	61.9	0.4	90.0	Pass
86.5	54.9	44.3	99.2	83.6	60.8	90.0	Pass
129.6	2.4	57.2	59.6	44.0	0.0	90.0	Pass
194.8	4.8	61.4	66.2	50.6	0.0	90.0	Pass

Note:

1. Measure Level @0.5m = Reading Level @0.5m + Factor

Factor (dB) = Cable Loss (dB) + Antenna Factor (dB/m) + Mixer Conversion Loss (dB)

2. Measure Level @3m = Measure Level @0.5m + 20 * log(0.5m / 3m)

3. Power Density = $(10^8 / 377) * \{10^{[(\text{Measure Level @3m} - 120) / 20]}\}^2$

The Radiated Emission below 1GHz:

Site: SIP-AC2	Time: 2021/03/22 - 11:40
Limit: FCC_Part15.209_RE(3m)	Engineer: Stephen Dong
Probe: AC2_VULB 9168 _20-2000MHz	Polarity: Horizontal
EUT: Peraso 60 GHz radio Module. Quetzal based	Power: AC 120V/60Hz
Test Mode: Transmit at channel 1 (58.32GHz)	

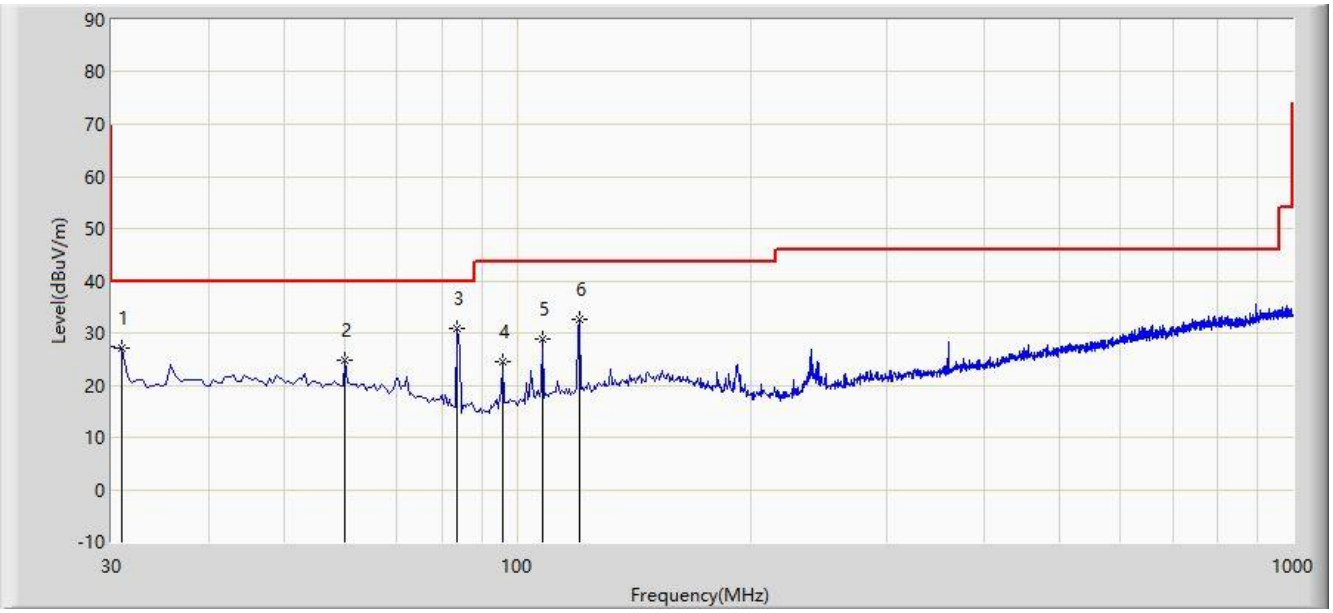

No	Flag	Mark	Frequency (MHz)	Measure Level (dBμV/m)	Reading Level (dBμV)	Margin (dB)	Limit (dBμV/m)	Factor (dB)	Type
1			30.970	27.169	10.510	-12.831	40.000	16.659	PK
2			60.070	24.875	7.917	-15.125	40.000	16.958	PK
3		*	83.835	30.727	18.346	-9.273	40.000	12.381	PK
4			95.960	24.398	11.884	-19.102	43.500	12.514	PK
5			108.085	28.731	14.166	-14.769	43.500	14.566	PK
6			120.210	32.536	16.919	-10.964	43.500	15.617	PK

Note 1: Measure Level (dBμV/m) = Reading Level (dBμV) + Factor (dB)

Factor (dB) = Cable Loss (dB) + Antenna Factor (dB/m)

Note 2: QP measurement was not performed when peak measure level was lower than the QP limit.

Note 3: The amplitude of radiated emissions (frequency range from 9kHz to 30MHz) is that proximity to ambient noise, which also are attenuated more than 20 dB below the permissible value. Therefore, the data is not presented in the report.

Site: SIP-AC2	Time: 2021/03/22 - 11:54
Limit: FCC_Part15.209_RE(3m)	Engineer: Stephen Dong
Probe: AC2_VULB 9168 _20-2000MHz	Polarity: Vertical
EUT: Peraso 60 GHz radio Module. Quetzal based	Power: AC 120V/60Hz
Test Mode: Transmit at channel 1 (58.32GHz)	

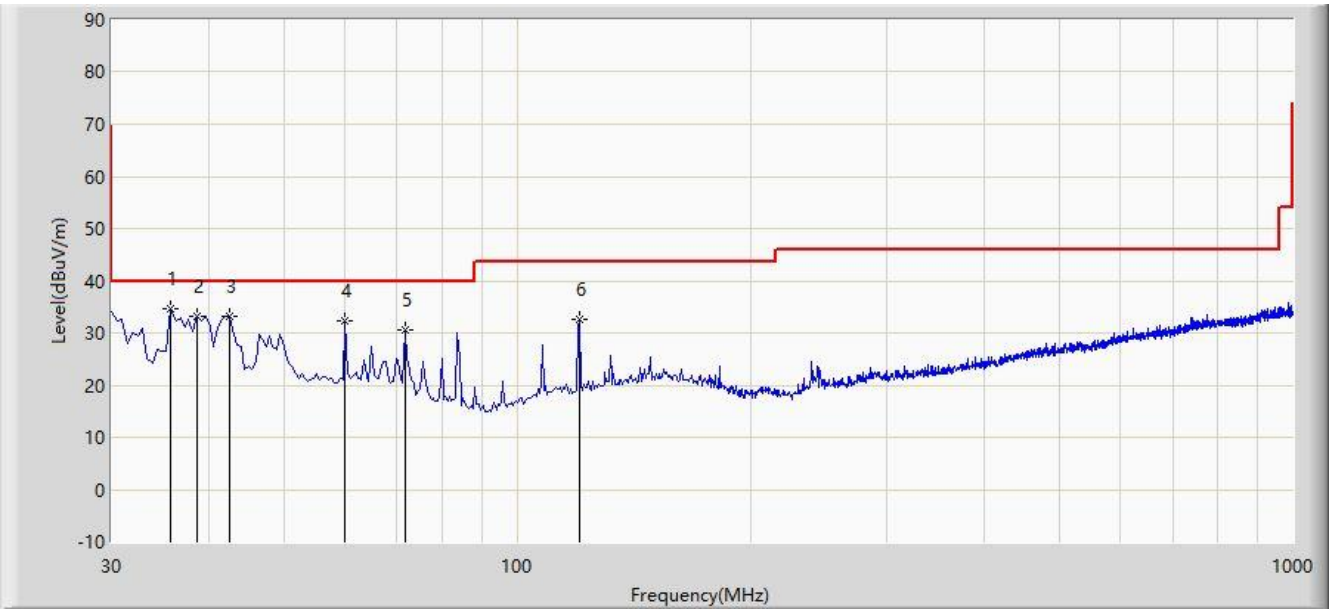

No	Flag	Mark	Frequency (MHz)	Measure Level (dBμV/m)	Reading Level (dBμV)	Margin (dB)	Limit (dBμV/m)	Factor (dB)	Type
1		*	35.820	34.523	17.426	-5.477	40.000	17.097	PK
2			38.730	33.252	15.903	-6.748	40.000	17.349	PK
3			42.610	33.104	15.408	-6.896	40.000	17.696	PK
4			60.070	32.200	15.242	-7.800	40.000	16.958	PK
5			71.710	30.696	15.651	-9.304	40.000	15.045	PK
6			120.210	32.655	17.038	-10.845	43.500	15.617	PK

Note 1: Measure Level (dBμV/m) = Reading Level (dBμV) + Factor (dB)

Factor (dB) = Cable Loss (dB) + Antenna Factor (dB/m)

Note 2: QP measurement was not performed when peak measure level was lower than the QP limit.

Note 3: The amplitude of radiated emissions (frequency range from 9kHz to 30MHz) is that proximity to ambient noise, which also are attenuated more than 20 dB below the permissible value. Therefore, the data is not presented in the report.

6.6. Frequency Stability

6.6.1.Test Limit

Fundamental emissions must be contained within the frequency bands 57 - 71GHz during all conditions of operation. Equipment is presumed to operate over the temperature range -20 to +50 degrees Celsius with an input voltage variation of 85% to 115% of rated input voltage, unless justification is presented to demonstrate otherwise.

6.6.2.Test Procedure used

ANSI C63.10-2013 Section 9.14

6.6.3.Test Procedure

1. Arrange EUT and test equipment according Section 6.6.4.
2. With the EUT at ambient temperature and voltage source set to the EUT nominal operating voltage (100%), record the spectrum mask of the EUT emission on the spectrum analyzer.
3. Vary EUT power supply between 85% and 115% of nominal, and record the frequency excursion of the EUT emission mask.
4. Set the power supply to 100% nominal setting, and raise EUT operating temperature to 50 °C.
5. Record the frequency excursion of the EUT emission mask.
6. Repeat step 5 at each 10°C increment down to -20 °C.

6.6.4.Test Setup

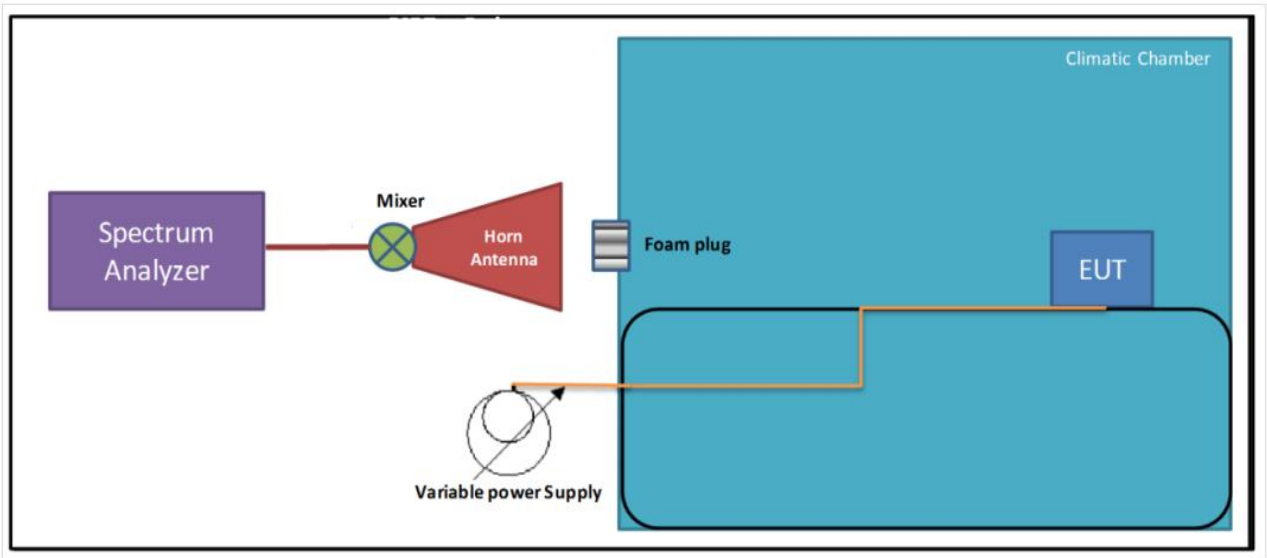

6.6.5.Test Result

Test Site	SIP-AC2	Test Engineer	Andy Zhu
Test Date	2021/03/19		

Voltage (%)	Power (VAC)	Temp (℃)	Channel 1 (GHz)	Channel 4 (GHz)	Limit (GHz)	Result
100%	120	- 20	57.4721	65.7126	57 ~ 71	Pass
		- 10	57.4720	65.7125	57 ~ 71	Pass
		0	57.4722	65.7126	57 ~ 71	Pass
		+ 10	57.4723	65.7127	57 ~ 71	Pass
		+ 20	57.4720	65.7125	57 ~ 71	Pass
		+ 30	57.4722	65.7127	57 ~ 71	Pass
		+ 40	57.4719	65.7125	57 ~ 71	Pass
		+ 50	57.4720	65.7128	57 ~ 71	Pass
115%	138	+ 20	57.4722	65.7127	57 ~ 71	Pass
85%	102	+ 20	57.4721	65.7128	57 ~ 71	Pass

6.7. Group Installation

6.7.1.Test Limit

Any transmitter that has received the necessary FCC equipment authorization under the rules of this chapter may be mounted in a group installation for simultaneous operation with one or more other transmitter(s) that have received the necessary FCC equipment authorization, without any additional equipment authorization. However, no transmitter operating under the provisions of this section may be equipped with external phase-locking inputs that permit beam-forming arrays to be realized.

6.7.2.Test Procedure used

N/A

6.7.3.Test Procedure

N/A

6.7.4.Test Setup

N/A

6.7.5.Test Result

The frequency, amplitude and phase of the transmit signal are set within the EUT. There are no external phase-locking inputs or any other means of combining two or more units together to realize a beam-forming array.

6.8. AC Conducted Emissions Measurement

6.8.1.Test Limit

FCC 15.207 Limits		
Frequency (MHz)	QP (dBμV)	AV (dBμV)
0.15 ~ 0.50	66 ~ 56	56 ~ 46
0.50 ~ 5.0	56	46
5.0 ~ 30	60	50
Note 1: The lower limit shall apply at the transition frequencies. Note 2: The limit decreases linearly with the logarithm of the frequency in the range 0.15MHz to 0.5MHz.		

6.8.2.Test Setup

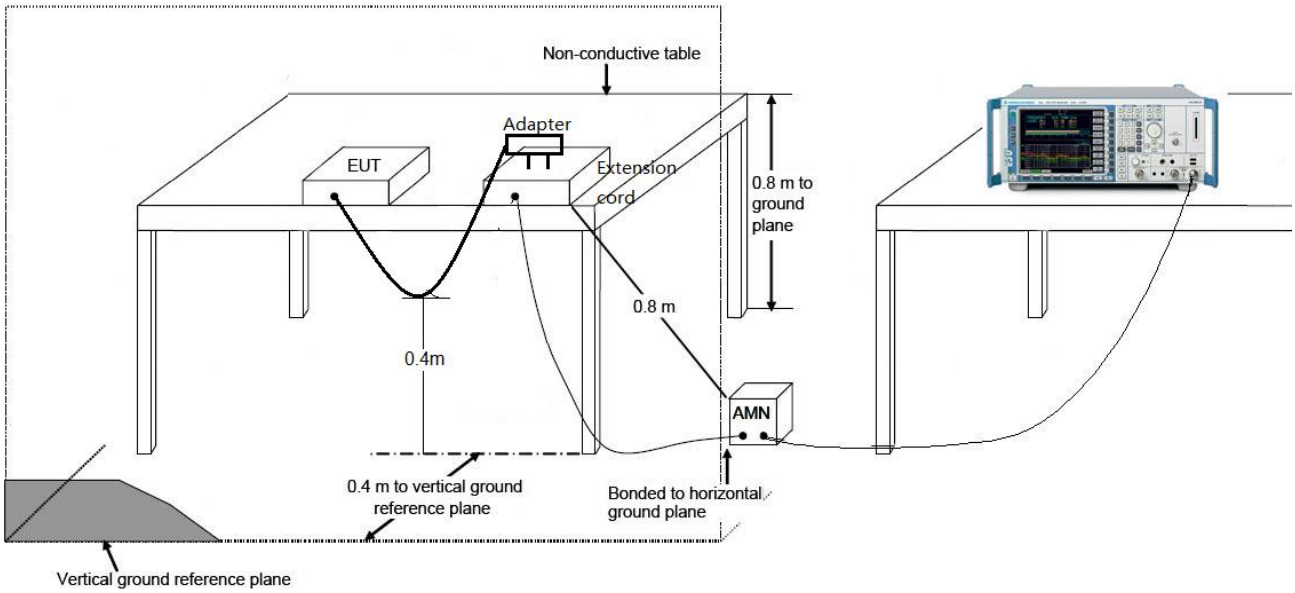

6.8.3.Test Result

Site: SIP-SR2	Time: 2021/03/24 - 09:42
Limit: FCC_Part15.207_CE_AC Power	Engineer: Rupert Wang
Probe: SIP-SR2-ENV216_101684	Polarity: Line
EUT: Peraso 60 GHz radio Module. Quetzal based	Power: AC 120V/60Hz
Note: Test Mode 1	

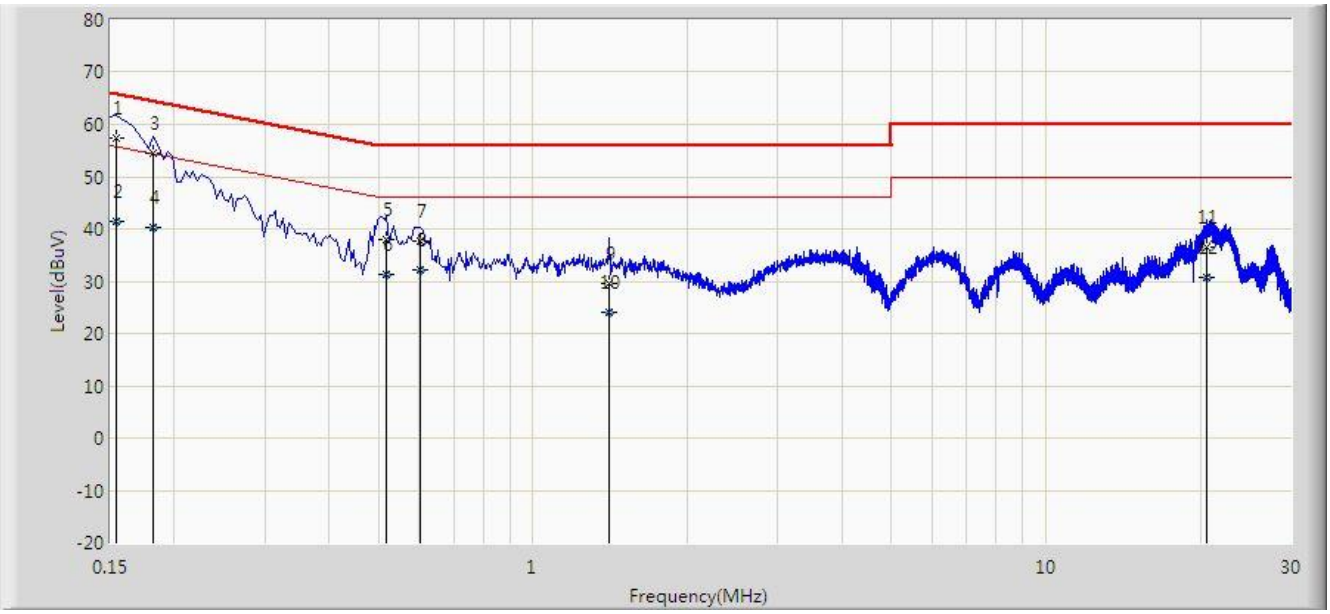

No	Flag	Mark	Frequency (MHz)	Measure Level (dBμV)	Reading Level (dBμV)	Margin (dB)	Limit (dBμV)	Factor (dB)	Type
1		*	0.154	57.352	47.900	-8.430	65.781	9.452	QP
2			0.154	41.352	31.900	-14.430	55.781	9.452	AV
3			0.182	54.587	45.128	-9.807	64.394	9.460	QP
4			0.182	40.325	30.866	-14.069	54.394	9.460	AV
5			0.518	37.832	28.272	-18.168	56.000	9.560	QP
6			0.518	31.199	21.639	-14.801	46.000	9.560	AV
7			0.602	37.573	28.013	-18.427	56.000	9.560	QP
8			0.602	32.137	22.577	-13.863	46.000	9.560	AV
9			1.410	29.671	20.101	-26.329	56.000	9.570	QP
10			1.410	24.127	14.557	-21.873	46.000	9.570	AV
11			20.522	36.548	26.242	-23.452	60.000	10.306	QP
12			20.522	30.715	20.409	-19.285	50.000	10.306	AV

Note: Measure Level (dBμV) = Reading Level (dBμV) + Factor (dB)

Factor (dB) = Cable Loss (dB) + LISN Factor (dB).

Site: SIP-SR2	Time: 2021/03/24 - 09:48
Limit: FCC_Part15.207_CE_AC Power	Engineer: Rupert Wang
Probe: SIP-SR2-ENV216_101684	Polarity: Neutral
EUT: Peraso 60 GHz radio Module. Quetzal based	Power: AC 120V/60Hz
Note: Test Mode 1	

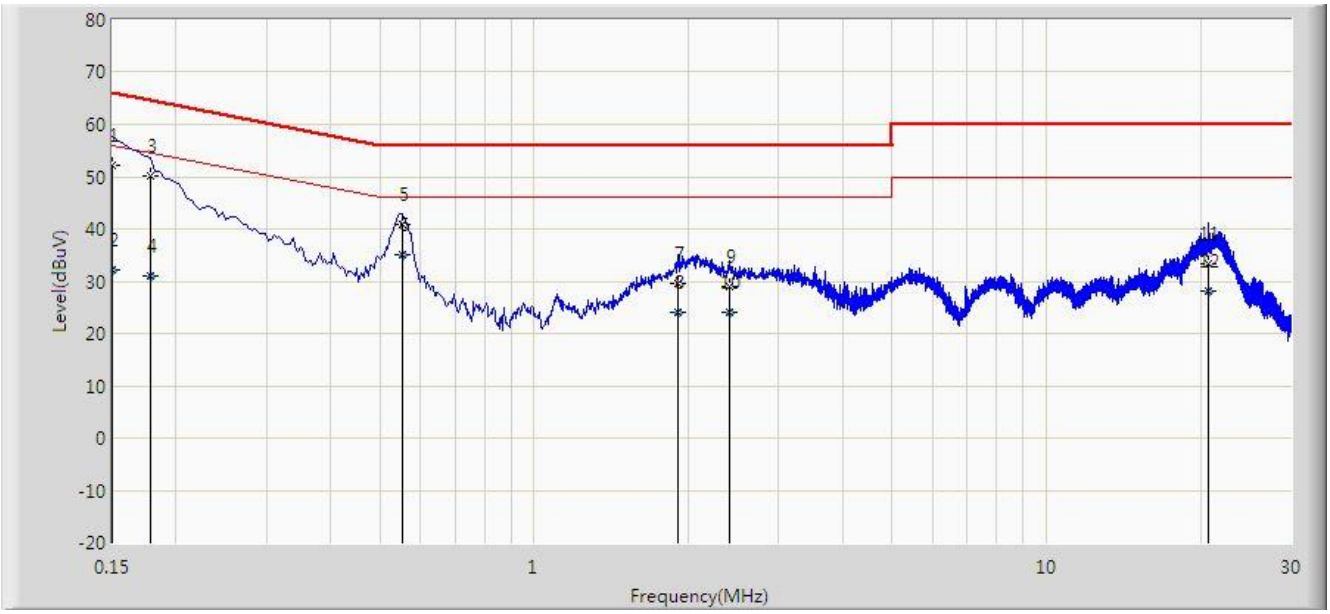

No	Flag	Mark	Frequency (MHz)	Measure Level (dBμV)	Reading Level (dBμV)	Margin (dB)	Limit (dBμV)	Factor (dB)	Type
1			0.150	52.174	42.743	-13.826	66.000	9.431	QP
2			0.150	32.044	22.613	-23.956	56.000	9.431	AV
3			0.178	50.145	40.709	-14.434	64.578	9.436	QP
4			0.178	31.027	21.591	-23.552	54.578	9.436	AV
5			0.554	40.839	31.299	-15.161	56.000	9.540	QP
6		*	0.554	35.134	25.594	-10.866	46.000	9.540	AV
7			1.902	29.578	20.019	-26.422	56.000	9.559	QP
8			1.902	23.917	14.358	-22.083	46.000	9.559	AV
9			2.402	29.090	19.488	-26.910	56.000	9.602	QP
10			2.402	23.930	14.328	-22.070	46.000	9.602	AV
11			20.758	33.476	23.235	-26.524	60.000	10.241	QP
12			20.758	28.074	17.833	-21.926	50.000	10.241	AV

Note: Measure Level (dBμV) = Reading Level (dBμV) + Factor (dB)

Factor (dB) = Cable Loss (dB) + LISN Factor (dB).

7. CONCLUSION

The data collected relate only the item(s) tested and show that this device is in compliance with Part 15C of the FCC Rules.

The End

Appendix A - Test Setup Photograph

Refer to “2103RSU022-UT” file.

Appendix B - EUT Photograph

Refer to “2103RSU022-UE” file.