OPERATION INSTRUCTION

Wireless Digital Caliper

Attention: This caliper is not waterproof. If the sticker contacts the coolant or other reagents, it will cause incorrect or confused reading. Coolant or other reagents cannot be removed by ethanol, WD40 can beused to remove .

Resolution: 0.01mm/0.0005"
Accuracy: ±0.03mm

VIDEO

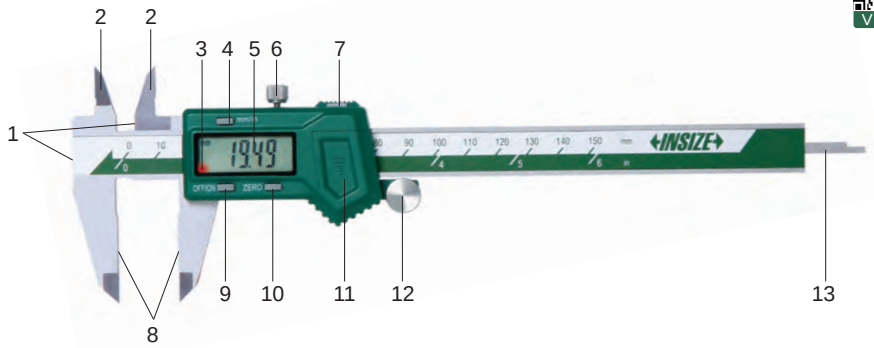

1-Step measuring faces
2-Internal measuring jaws
3-Data transfer signal light
4-'mm/in' button
5-LCD display
6-Locking screw
7-Data transfer
8-External measuring jaws
9-'OFF/ON' button
10-'ZERO' button
11-Battery cover
12-Thumb roller
13-Depth measuring bar

1. Install battery:
   Remove the battery cover ,put CR2032 battery into battery house, the positive side of battery (+) should face out (fig.1), close the battery cover.

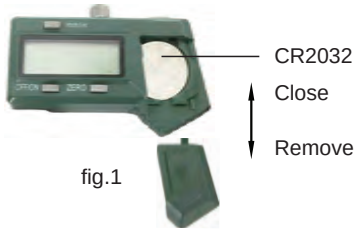

fig.1

2. Buttons:
   ---'in/mm' is for inch and mm conversion
   ---'OFF/ON' is to turn on/off
   ---'ZERO' is to set zero
   ---Press the data transfer button to trigger data collection, and send one data each time
   ---For each successful data transmission, the red light flashes once

3. Please clean the measuring faces with soft cloth, then close the external jaws and press 'ZERO' button to set zero. Caliper should be checked regularly to make sure that it is properly zero set.

4. To get accurate measurement, it is necessary to control the force. During measurement, please always apply constant and proper force on the caliper. The measuring jaws should "hold" the workpiece and can still "slide" on the workpiece.

5. Automatic power off in about five minutes. Press 'OFF/ON' button or move the digital unit to turn on display.

6. Optional accessory:receiver(code 7315-2, 7315-3).Reference MN-7315R.Application as follows:

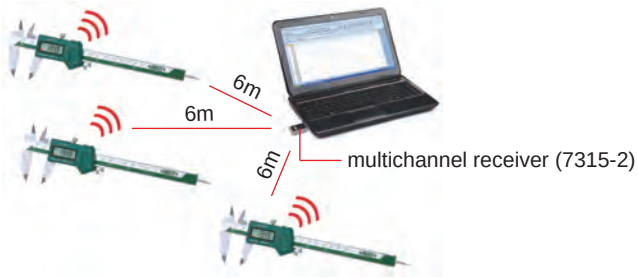

7. One battery can last for one year use. When the battery is running out, the display will become weak, abnormal reading or other phenomena will appear when moving the digital unit, please remove battey. If caliper is not be used for more than 3 months, please remove the battery. Otherwise, liquid may leak from the battery and damage the caliper.

8. If digits do not change when buttons are pressed, take out battery and put it back after 1 minute.

9. Working temperature is 0-40°C/32-104°F, relative humidity should not exceed 80%.

MN-1113-E
V1

Copyright © INSIZE CO., LTD. All Rights Reserved

Copyright © INSIZE CO., LTD. All Rights Reserved
www.insize.com

10. FCC statement:

1. This device complies with Part 15 of the FCC Rules.
Operation is subject to the following two conditions:
(1) This device may not cause harmful interference.
(2) This device must accept any interference received, including interference that may cause undesired operation.
2. Changes or modifications not expressly approved by the party responsible for compliance could void the user's authority to operate the equipment.
NOTE: This equipment has been tested and found to comply with the limits for a Class B digital device, pursuant to Part 15 of the FCC Rules.
These limits are designed to provide reasonable protection against harmful interference in a residential installation.
This equipment generates uses and can radiate radio frequency energy and, if not installed and used in accordance with the instructions, may cause harmful interference to radio communications. However, there is no guarantee that interference will not occur in a particular installation.
If this equipment does cause harmful interference to radio or television reception, which can be determined by turning the equipment off and on, the user is encouraged to try to correct the interference by one or more of the following measures:
Reorient or relocate the receiving antenna.
Increase the separation between the equipment and receiver.
Connect the equipment into an outlet on a circuit different from that to which the receiver is connected.
Consult the dealer or an experienced radio/TV technician for help.

11. RF warning statement:

The device has been evaluated to meet general RF exposure requirement. The device can be used in portable exposure condition without restriction.

MN-1113-E
V1

Copyright © INSIZE CO., LTD. All Rights Reserved

Copyright © INSIZE CO., LTD. All Rights Reserved
www.insize.com