Density

Complete Installation Guide

Open Area

01 — In the Box

02 — Hardware

03 — Power

04 — Networking

05 — Mount Plate Installation

06 — Toggle Anchor Mounting (Threaded Drop Rod)

07 — Threaded Rod Anchor Mounting (Threaded Rod Drop)

08 — Junction Box Mounting

In the Box

01

Product

- Density Open Area sensor
- Quick Start Guide
- Legal Information Booklet

Ceiling mount kit

- Mount Plate
- Hex Key (2mm)
- 4pcs #8 x 1.25in Flat Head Screws
- 4pcs Toggler Multi-Surface Anchors

Hardware

02

Alternative mounting *(Available for order)*

Threaded Rod Mount Kit (1/4”-20 threaded rod not included)

- Threaded rod anchor for wood
- Threaded rod anchor for steel
- Threaded rod anchor for concrete
- Toggle Anchor for hollow ceilings

Sensors

Single-chip 60-64GHz mmWave sensor

Operating temperature

- Temperature: 32°- 95°F (0°- 35°C)
- Relative humidity: 20% to 80% non-condensing

Indicators

Multi-color status LED

Unit weight

- 0.78lbs (0.35kg)

Dimensions & features

- White polycarbonate enclosure
- Painted aluminum base
- Integrated 1/4”-20 mounting threads
- Mount plate

Interface

- 1x 10/100/1000 BaseT RJ45 interface
- 1x USB 2.0 Port for WiFi/Bluetooth dongle
- Reset button

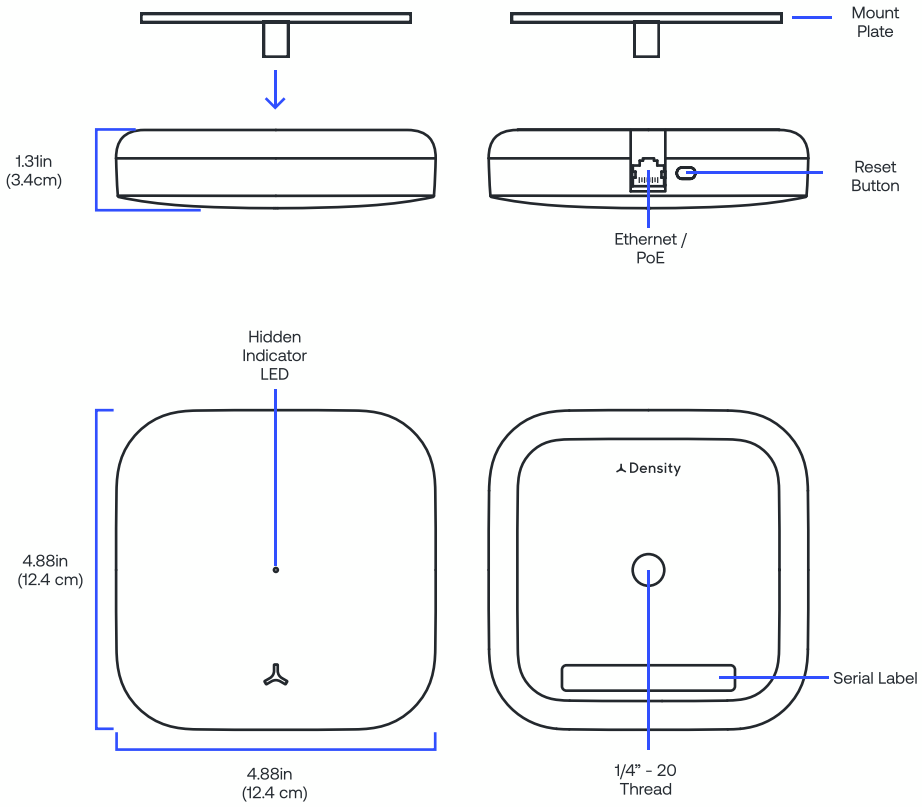

Mounting Plate

A. Ceiling or Drop Ceiling Tile
B. 4” Square Junction Box (US)
C. 4” Round Junction Box (US)
D. 3.5” Round Junction Box (US)
E. Single-Gang Outlet Box (US)
F. Cable Pass Through
G. Auxiliary Hole
H. Threaded Rod

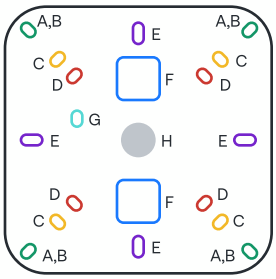

Resetting the sensor

To power reset the sensor to default factory settings, press and hold the reset button until the LED stops blinking (approx 10 seconds). The sensor must be plugged in and connected to power in order to reset.

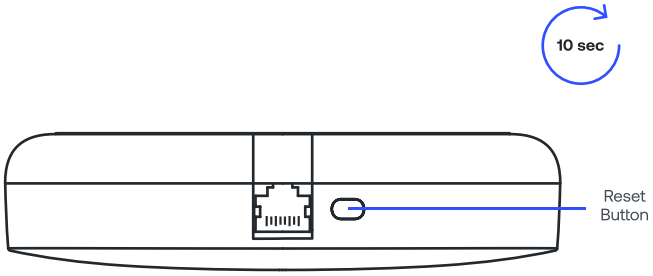

Sensor LED Status Indicator

The sensor has an indicator LED located on the front of the sensor. The color chart to the right explains the meaning of each color, defines any issues, and lists what actions to take if necessary.

If the recommended action does not resolve the LED light error status, factory reset the sensor. To reset, press and hold the reset button on the side of the sensor until the LED light starts flashing white. If the issue persists, please reach out to support@density.io

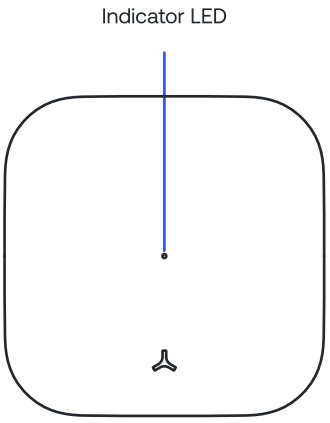

Color	Pattern	Visual	Meaning	Description/Action
None	No Light		Sensor is not receiving power	Check sensor is plugged in and is receiving power from source
White	Solid		Operating normally	No action needed
White	Flashing		Indicates where sensor is when selecting “Locate” in Unit Setup App	Triggered via Unit Setup App
Blue	Solid		Sensor is ready for provisioning	Typical state out of the box once sufficient power is provied.
Blue	Flashing		Sensor is provisioning	Triggered via Unit Setup App. This process may take 5-10 minutes.
Orange	Flashing		Low power mode	Confirm switch is PoE+ with at least 30W per port or test ethernet cable
Purple	Solid		Sensor cannot connect to Density server	Provision sensor via Unit Setup app and if not resolved, run Validation in same app
Purple	Flashing		Server cannot connect to DNS	*Verify DNS is available on VLAN. If no internal DNS server, review corporate firewalls to verify device can reach default DNS servers.*
Red	Solid		Sensor does not have a Network Configuration	*If using WiFi, use the Unit Setup app to create a Network Template. If using ethernet, verify DHCP server is available on VLAN.*
Red	Flashing		Bluetooth dongle not present	Occurs when device has not yet been provisioned and the Bluetooth Dongle is absent. Plug in Bluetooth Dongle to provision.

Power

03

Power requirements

The OA Sensor can be powered by either a 802.3af PoE switch or a PoE Injector Wall Plug.

Cable requirements

The sensor requires a Cat 5e or later ethernet cable (not included). Flat white cable recommended for optimal aesthetics.

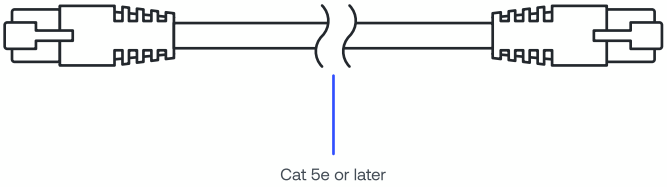

Option 1 – PoE+ Switch

Connect one end of a Cat 5e or later ethernet cable to a 802.3af compliant network switch capable of providing 16W per port. Plug the other end of the ethernet cable into the OA Sensor.

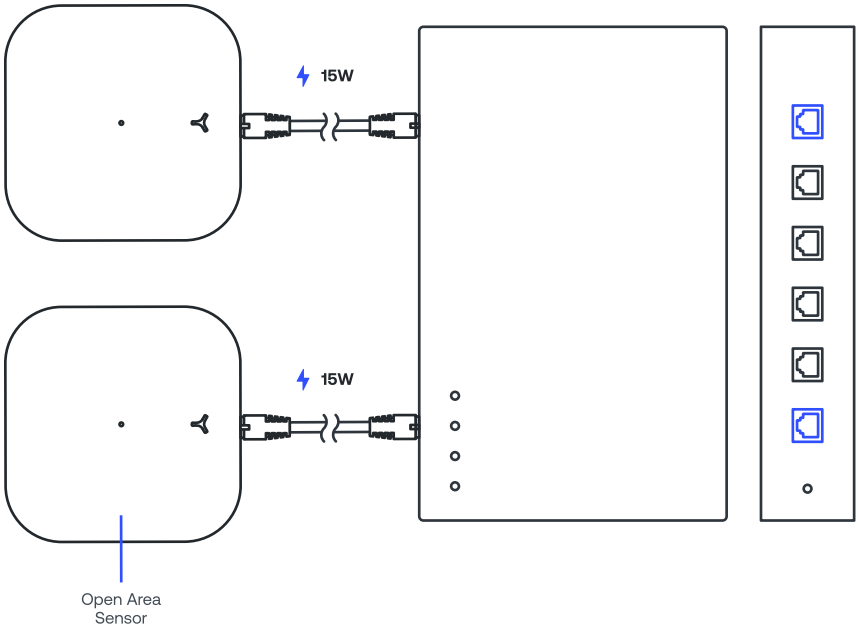

Option 2 – PoE+ Injector Using WiFi

Plug the PoE Injector into any standard 120v wall outlet. Plug one end of a Cat 5e or later ethernet cable into the Data & Power Out port located on the bottom of the injector. Plug the other end of the ethernet cable into the sensor. Use the Unit Setup App to connect the sensor to a WiFi network.

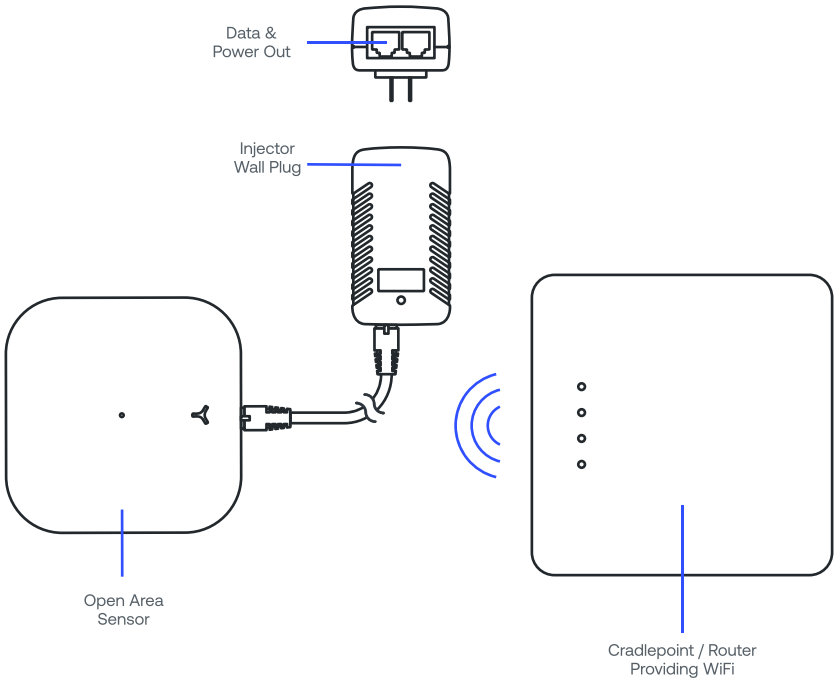

Option 3 – PoE+ Injector Using Ethernet

Plug the PoE Injector into any standard 120v wall outlet. Plug one end of a Cat 5e or later ethernet cable into a cradlepoint / router or non PoE switch. Plug the other end of the cable into the Data In port located on the bottom of the Injector. Plug an additional ethernet cable into the Data & Power Out port also located on the bottom of the injector. Plug the other end of the ethernet cable into the sensor.

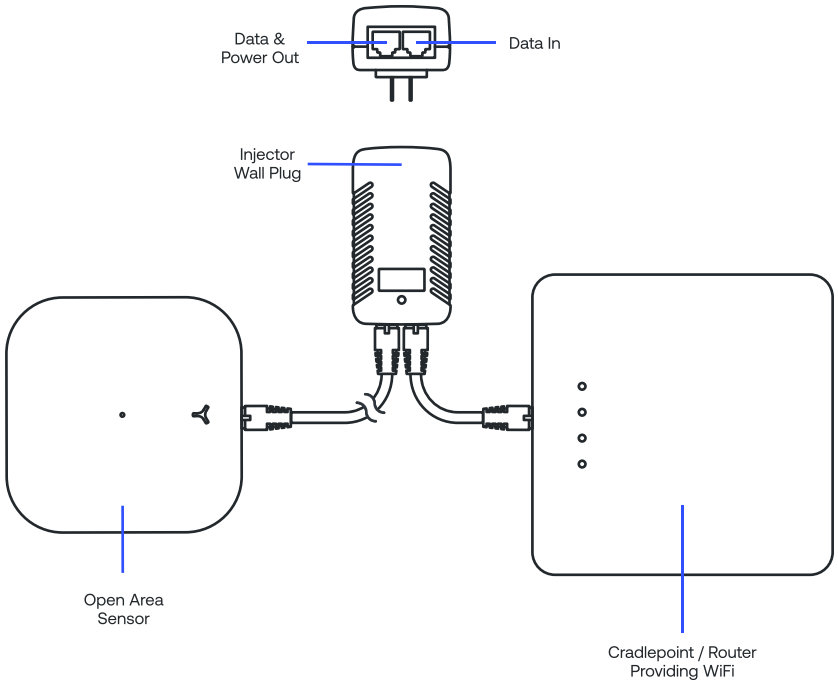

Networking

04

Networking basics

Density devices require internet connectivity to pass data to the web application.

Options to connect your Density devices to the internet:

- Option 1 – Wired internet switch
- Option 2 – WiFi (requires the Density Unit Setup App to locally set up the device)
- Option 3 – Wired internet via cradle-point

Networks that are not supported:

- Captive portal
- Proxy
- 5GHz WiFi networks
- WPA2 Enterprise
- Hidden Networks *

** Hidden networks can be used if temporarily made transparent while we configure the devices.*

Network configuration options

Both DHCP and Static IP configurations are supported. (Static IP configurations require the Density Unit Setup App to locally set up the device).

DHCP supported configuration

Option 53 – DHCP Message Type

- Discover

Option 57 – Maximum DHCP Message Size

- 576

Option 55 – Parameter List

- Subnet Mask (1)
- Router (3)
- Interface MTU (26)
- Private/Proxy Auto Discovery (252)
- Network Time Protocol Servers (42)
- Domain Name (15)
- Domain Name Server (6)
- Hostname (12)

Option 60 – Vendor Class Identifier *

- “Density S5 DPU”

Option 61 – Client Identifier

- Mac Address

Option 12 – Hostname

- Density-<Serial>

Static configuration requirements

You will need an IPv4 Address and Name Servers from your IT team to use in the setup process. (Requires the Density Unit Setup App to locally set up the device).

If you have a corporate firewall

You will need to whitelist the device MAC addresses (the MAC addresses can be found on the outside of the packaging box for the device). You may also have to whitelist the following addresses to ensure the device is able to communicate to your corporate network:

*.density.io
*.s3.amazonaws.com
*.pool.ntp.org (if applicable)
connman.net
connectivitycheck.gstatic.com
8.8.8.8 (if applicable)
8.8.4.4 (if applicable)

Density does not currently support IP address whitelisting. A list of exact API subdomains is available by request.

Notes:

- The sensors communicate via https, therefore port 443 must be open
- ntp port (port 123) must be open
- If internal DNS is not available then external DNS servers 8.8.8.8 and 8.8.4.4 will be used and port 53 must be open

Unit Setup App

Used to configure units. iOS and Android application available - Go to mobile.density.io to download.

Mount Plate Installation

05

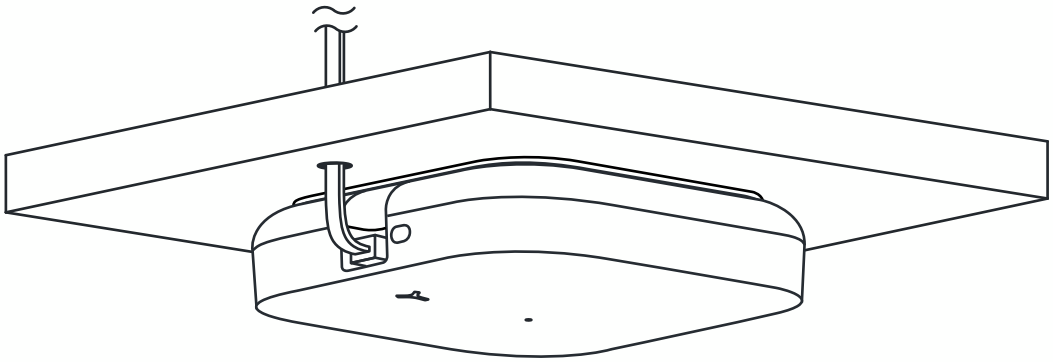

Ceiling Mount

- Mount plate
- 4pcs #6 x 1.25in flat head screws
- 4pcs multi-surface anchors

Materials not included

- Mallet
- Drill
- 3/4in drill bit
- 3/16in drill bit
- 1/8in drill bit
- Ethernet cable (Cat 5e or later)

Power & connectivity

All sensors require power over ethernet and internet connectivity.

Ceiling mount plate assembly

The ceiling mount plate can be mounted to solid and hollow ceiling surfaces using the provided screws and anchors.

Remove bag from lower insert in the box that contains mount bracket and screws.

Remove items from the bag including mount plate and screws and anchors.

Position mount bracket on the ceiling in the prescribed location, with one of the square slots pointing in the direction the ethernet jack needs to point.

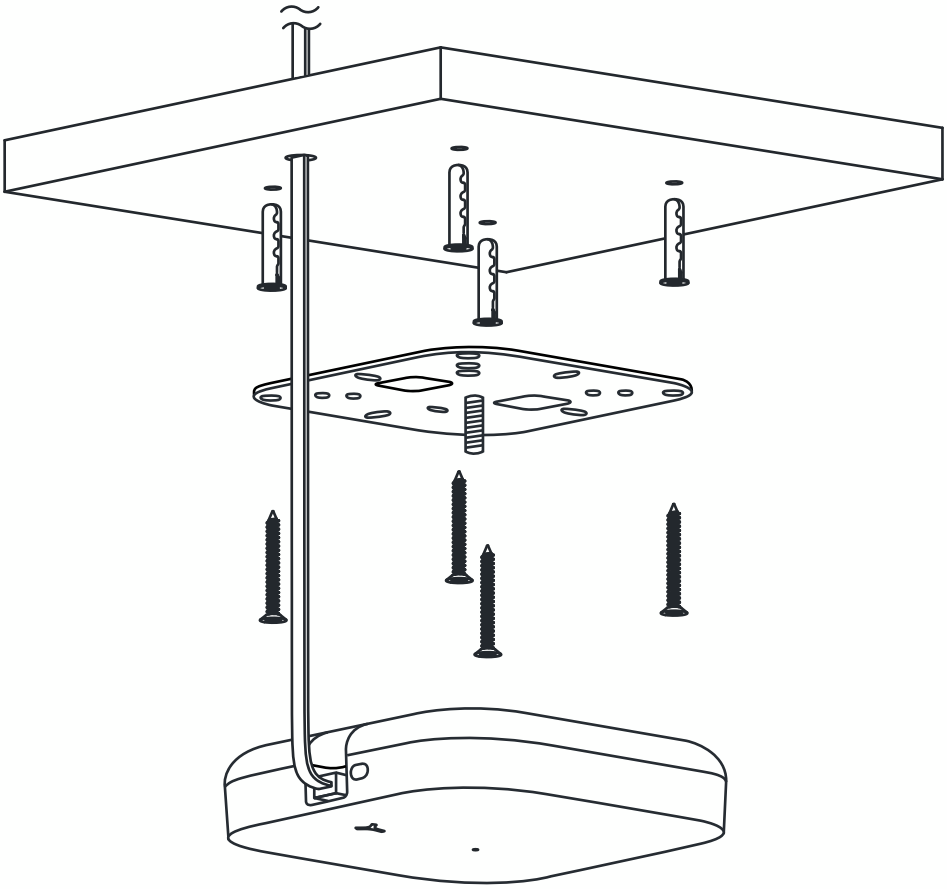

Step 1: Mark placement

Using a pencil or pen mark location on ceiling for anchor screws using two screws at a minimum. If using the opening as a cable pass through to the ceiling, outline the opening location on the ceiling

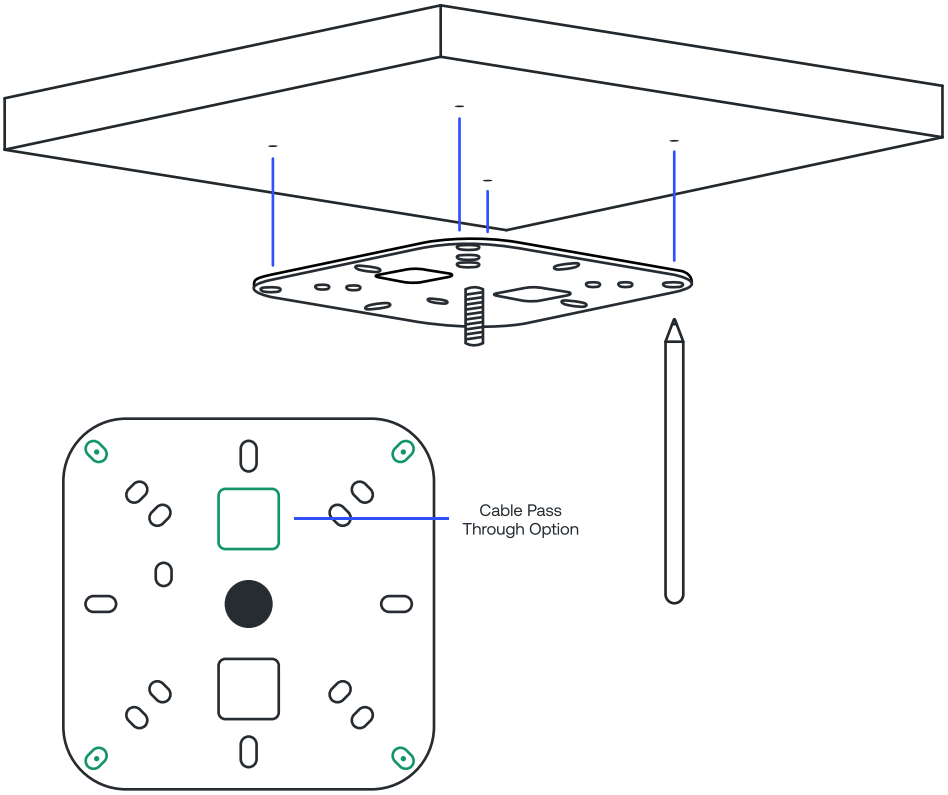

Step 2: Drill holes

Drill a hole through each pencil mark using a 3/16in drill bit. For hollow substrates, drill completely through. For solid wall materials, drill holes with a depth of at least 1 1/4in (3.2cm).

For wood or metal, use a 1/8in drill bit to create a pilot hole.

If using the cable pass through slot, use a 3/4in drill bit to create the hole in the ceiling.

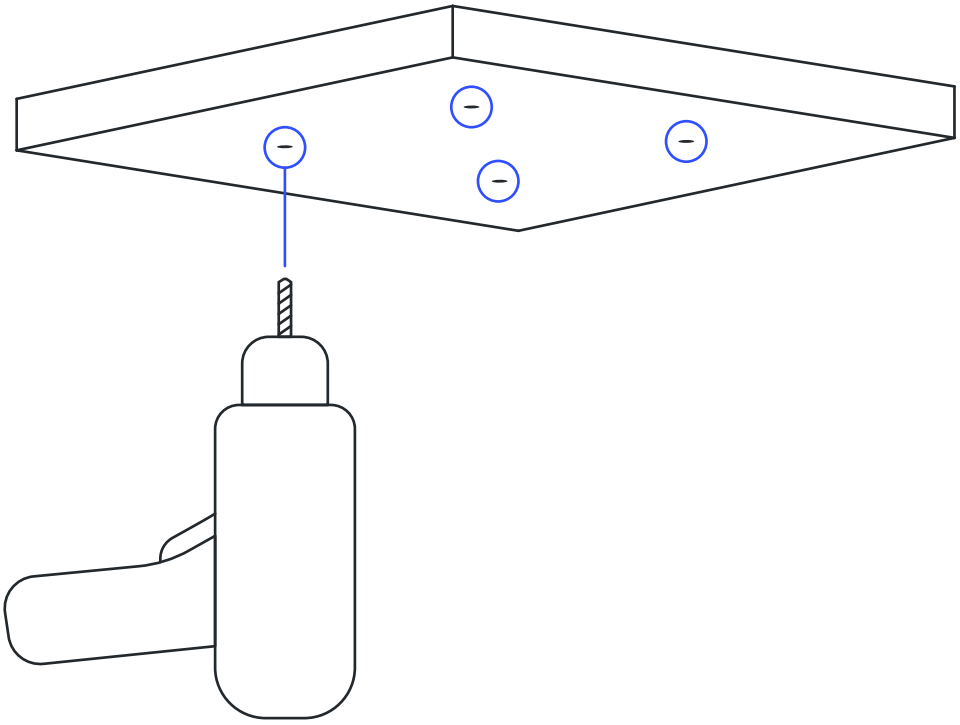

Step 3: Insert anchors

Use a mallet or hammer to tap the anchors into each hole. Anchors should be flush with the wall.

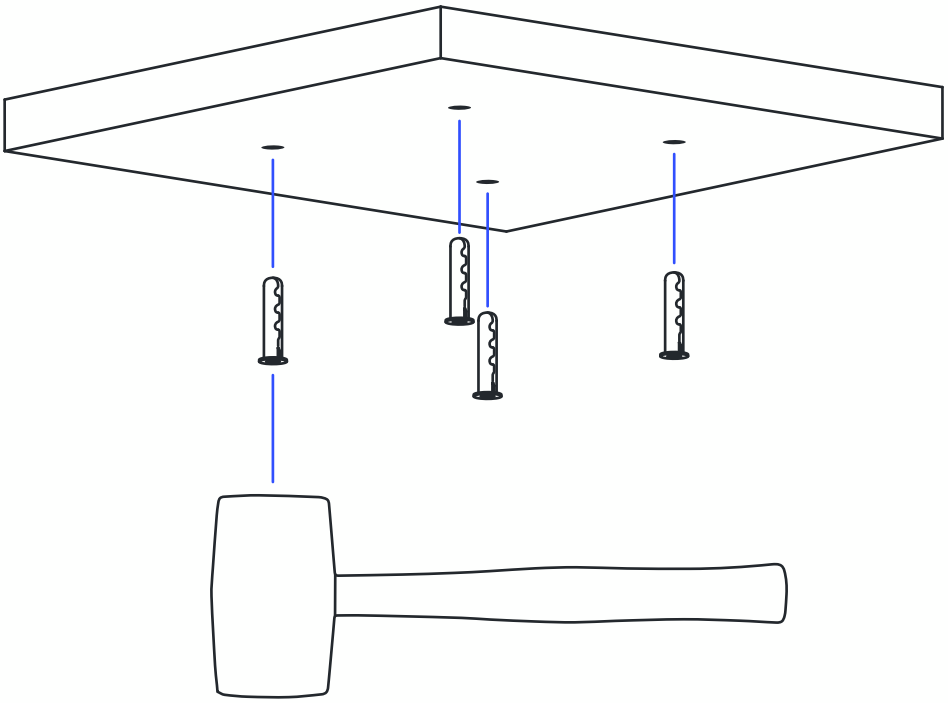

Step 4: Install mount plate

Align the holes in the mount plate with the installed anchors. Use a drill with #2 Phillips Screwdriver bit to drive each screw into the drywall anchors. Screws can also be driven in manually with a standard Phillips head screwdriver.

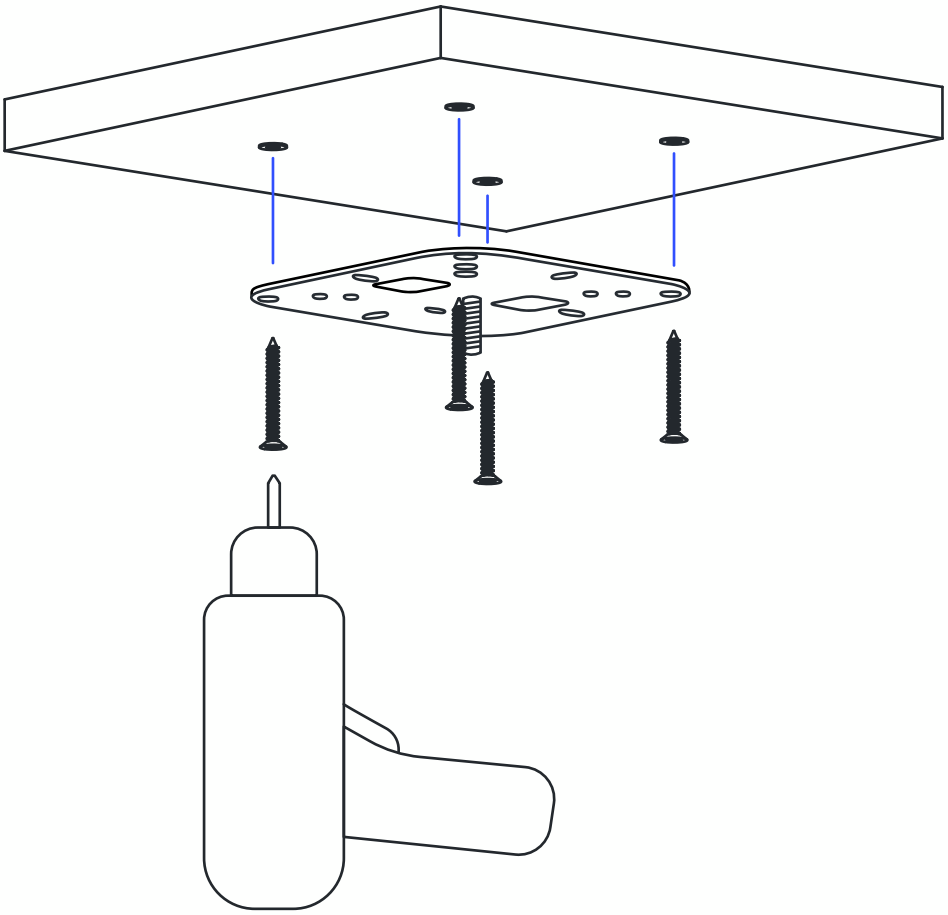

Step 5: Drill cabling hole

Drill a hole using a 3/4in (16mm) drill bit to route cable through.

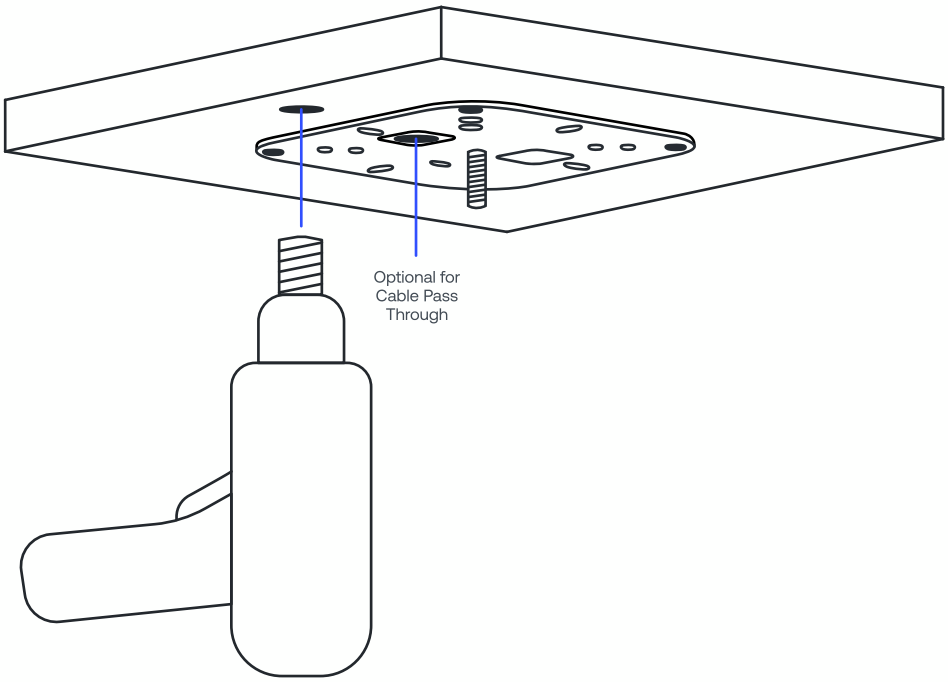

Step 6: Route cable

Route the ethernet cable through the drilled hole. Make sure the cable passes through opening in mount plate if you're using the Cable Pass Through.

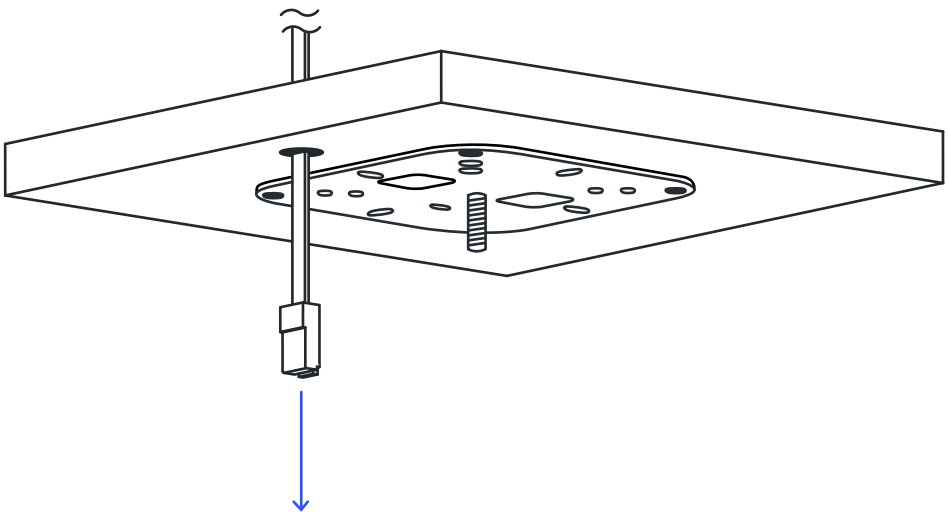

Step 7: Attach Open Area sensor

Attach the Open Area unit by threading onto the bracket. Pull the ethernet cable through approximately 6 inches out from the opening in the ceiling.

Screw the unit down all the way until it stops, then back it off to the prescribed location using the ethernet jack as the location guide.

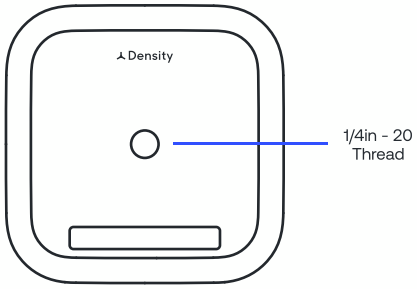

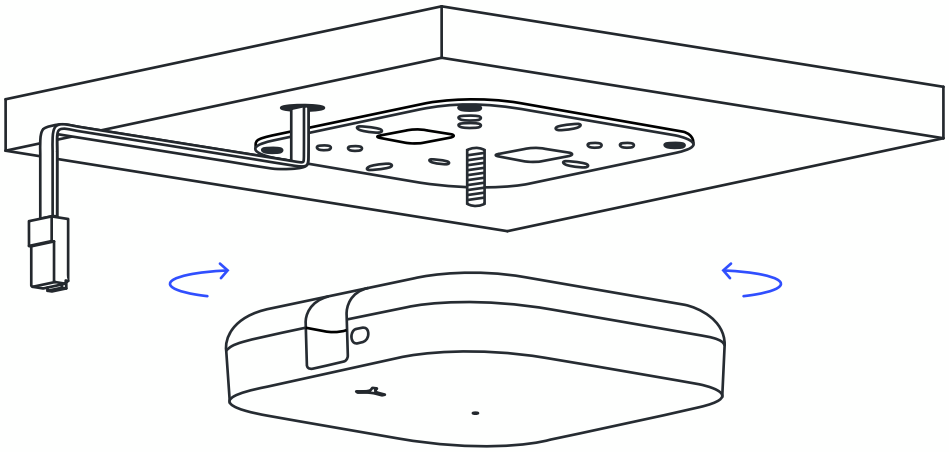

Step 9: Plug in cable

Plug the ethernet cable into the Open Area sensor. The sensor will automatically power up and the LED indicator on the front of the sensor will turn white.

Ensure the Open Area unit is level and parallel to the floor.

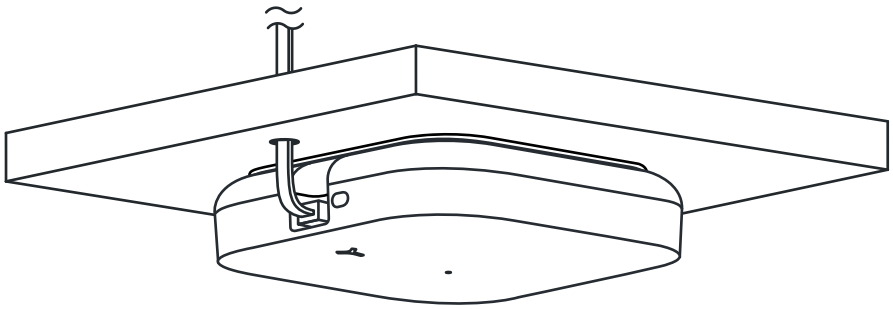

Toggle Anchor Mounting

For hollow ceiling types

06

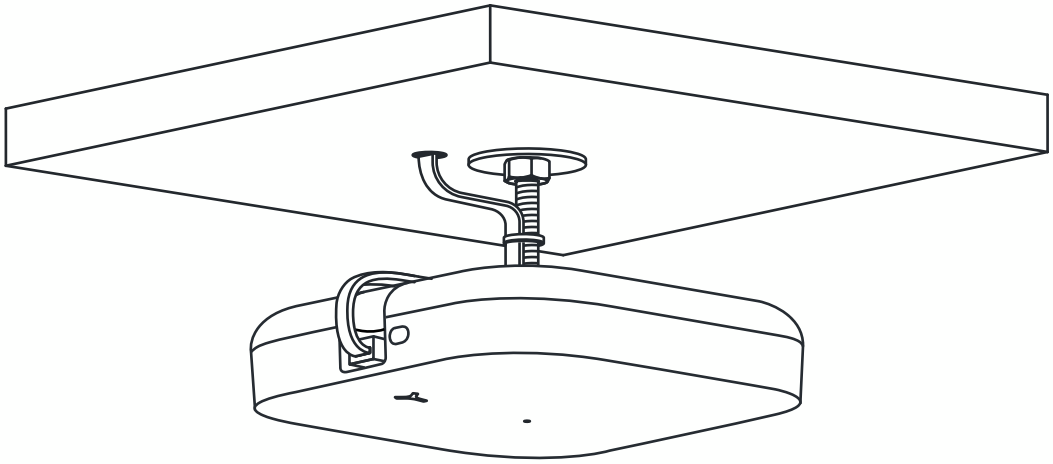

Ceiling Mount

- 1/4in-20 toggle anchor
- Steel washer
- Hex nut

Materials not included

- Drill
- 5/8in drill bit
- 1/4in-20 threaded rod
- Wrench or pliers
- PVC pipe (for cable management)
- Ethernet cable (Cat 5e or later)

Power & connectivity

All sensors require power over ethernet and internet connectivity.