intertek
Total Quality. Assured.

Luxshare Precision Industry Co.,Ltd.

TEST REPORT

SCOPE OF WORK

FCC TESTING–VSN:100133520

REPORT NUMBER

230427001SZN-004

ISSUE DATE **[REVISED DATE]**

27 June 2023 [----------]

PAGES

33

DOCUMENT CONTROL NUMBER

FCC 15C_Tx_b

© 2017 INTERTEK

RF
TEST REPORT

Report No.	**: 230427001SZN-004**
Product	**: onn. Full HD Streaming Device Google TV**
Model No.	**: VSN:100133520**
FCC ID	**: 2AYYS-8822K2VTG**

Applicant:	**Luxshare Precision Industry Co.,Ltd. Floor 2, Block A, Sanyo New Industrial Area, West Haoyi Community, Shajing Subdistrict Office, Bao an District Shenzhen, China**
Test Method/ Standard:	**FCC Part 15 Subpart E; KDB 789033 D02 v02r01; KDB 662911 D01 v02r01; KDB 905462 D02 v02; ANSI C63.10-2013**
Test By:	**Intertek Testing Services Shenzhen Ltd. Longhua Branch 101, 201, Building B, No. 308 Wuhe Avenue, Zhangkengjing Community, GuanHu Subdistrict, LongHua District, Shenzhen, P.R. China.**

Prepared and Checked by:

Allen

Allen Qin
Engineer

Approved by:

Peter Kang

Peter Kang
Sr. Technical Supervisor
Date: 27 June 2023

- The test results reported in this test report shall refer only to the sample actually tested and shall not refer or be deemed to refer to bulk from which such a sample may be said to have been obtained.
- This report is for the exclusive use of Intertek's Client and is provided pursuant to the agreement between Intertek and its Client. Intertek's responsibility and liability are limited to the terms and conditions of the agreement. Intertek assumes no liability to any party, other than to the Client in accordance with the agreement, for any loss, expense or damage occasioned by the use of this report. Only the Client is authorized to copy or distribute this report. Any use of the Intertek name or one of its marks for the sale or advertisement of the tested material, product or service must first be approved in writing by Intertek. The observations and test results referenced from this report are relevant only to the sample tested. This report by itself does not imply that the material, product, or service is or has ever been under an Intertek certification program.
- For Terms And Conditions of the services, it can be provided upon request.
- The evaluation data of the report will be kept for 3 years from the date of issuance.

Table of Contents

Summary of Tests 3
1. General information 4
1.1 Identification of the EUT 4
1.2 Additional information about the EUT 5
1.3 Antenna description (15.203) 5
1.4 Peripherals equipment 5
2. Test specifications 6
2.1 Test standard 6
2.2 Operation mode 7
2.3 EUT Exercising Software 8
3. Maximum Output Power test (FCC 15.407) 9
3.1 Operating environment 9
3.2 Test setup & procedure 9
3.3 Limit 9
3.4 Measured data of Maximum Output Power test results 9
4. Power Spectrum Density test (FCC 15.407) 10
4.1 Operating environment 10
4.2 Test setup & procedure 10
4.3 Limit 10
4.4 Measured data of Power Spectrum Density test results 10
5. Minimum 6 dB RF Bandwidth (FCC 15.407) 11
5.1 Operating environment 11
5.2 Test setup & procedure 11
5.3 Limit 11
5.4 Measured data of 6dB down Emission Bandwidth test results 12
6. Radiated Emission test (FCC 15.205 & 15.209 & 15.407) 13
6.1 Operating environment 13
6.2 Test setup & procedure 13
6.3 Limit 15
6.4 Radiated spurious emission test data 17
6.4.1 Measurement results: frequencies equal to or less than 1 GHz 17
6.4.2 Measurement results: frequency above 1GHz 19
7. Power Line Conducted Emission test 22
7.1 Operating environment 22
7.2 Test setup & procedure 22
7.3 Limit 22
7.4 Power Line Conducted Emission test data 23
8. Frequency Stability Test 25
8.1 Test setup & procedure 25
8.2 Frequency Stability Test Data 25
9. Dynamic Frequency Selection (DFS) (FCC 15.407) 26
9.1 Requirement 26
9.2 Test setup 28
9.3 In-Service Monitoring for Channel Move Time, Channel Closing Transmission Time and Non-Occupancy Period 29

Summary of Tests

FCC Parts	Test	Section	Results
15.203	Antenna Requirement	1.3	Pass
15.407 a (1)/(3)	Maximum output power test	3	Pass
15.407 a (1)/(3)	Power Spectrum Density test	4	Pass
15.407 e	6dB Bandwidth	5	Pass
15.407 b, 15.205, 15.209	Radiated spurious emission test	6	Pass
15.207	AC line conducted emission test	7	Pass
15.407 g	Frequency Stability	8	Pass
15.407 h	DFS: Channel Closing Transmission Time	9.3	Pass
15.407 h	DFS: Channel Move Time	9.3	Pass
15.407 h	DFS: Non-Occupancy Period	9.3	Pass

1. General information

1.1 Identification of the EUT

Product:	onn. Full HD Streaming Device Google TV
Model No.:	VSN:100133520
Type of Device:	Slave device
Nominal Channel Bandwidth:	802.11a/n-HT20(20MHz), 802.11n-HT40(40MHz), 802.11ac(20/40/80MHz)
Frequency range:	5150MHz~5250 MHz, 5250MHz~5350MHz, 5470MHz-5725MHZ, 5725MHz~5850MHz
Channel Number and Operating Frequency:	4 channels for 5180 MHz ~ 5240 MHz (802.11 a/n20/ac-HT20); 2 channels for 5190 MHz ~ 5230 MHz (802.11 n40/ac-HT40); 1 channels for 5210 MHz (802.11ac-HT80); 4 channels for 5260 MHz ~ 5320 MHz (802.11 a/n20/ac-HT20); 2 channels for 5270 MHz ~ 5310 MHz (802.11 n40/ac-HT40); 1 channels for 5290 MHz (802.11ac-HT80); 8 channels for 5500 MHz ~ 5580 & 5660MHz ~ 5700 MHz (802.11a/n20/ac-HT20); 3 channels for 5510 MHz ~ 5550MHz & 5670 MHz (802.11n40/ac-HT40); 1 channels for 5530 MHz (802.11ac-HT80); 5 channels for 5745 MHz ~ 5825 MHz (802.11a/n20/ac-HT20); 2 channels for 5755 MHz ~ 5795 MHz (802.11n40/ac-HT40); 1 channels for 5775 MHz (802.11ac-HT80);
Modulation:	802.11a: OFDM (BPSK, QPSK, 16QAM, 64QAM) 802.11n: OFDM (BPSK, QPSK, 16QAM, 64QAM) 802.11ac: OFDM (BPSK, QPSK, 16QAM, 64QAM, 256QAM)
Rated Power:	DC 5V/1A
Test Date(s):	02 June 2023 to 08 June 2023
Note 1:	This report is for the exclusive use of Intertek's Client and is provided pursuant to the agreement between Intertek and its Client. Intertek's responsibility and liability are limited to the terms and conditions of the agreement. Intertek assumes no liability to any party, other than to the Client in accordance with the agreement, for any loss, expense or damage occasioned by the use of this report. Only the Client is authorized to permit copying or distribution of this report and then only in its entirety. Any use of the Intertek name or one of its marks for the sale or advertisement of the tested material, product or service must first be approved in writing by Intertek. The observations and test results in this report are relevant only to the sample tested. This report by itself does not imply that the material, product, or service is or has ever been under an Intertek certification program.
Note 2:	When determining the test conclusion, the Measurement Uncertainty of test has been considered.

1.2 Additional information about the EUT

The equipment under test (EUT) is a onn. Full HD Streaming Device Google TV with Bluetooth 5.0 (dual-mode) function operating in 2402-2480MHz, 2.4G WIFI function operating in 2412-2462MHz and 5G WIFI function operating in 5150MHz~5250 MHz, 5250MHz~5350MHz, 5470MHz- 5725MHZ, 5725MHz~5850MHz. For more detail information pls. refer to the user manual.

For more detail features, please refer to User's description as file name “descri.pdf”.

Related Submittal(s) Grants
This is an application for certification of U–NII device (5GHz Wi-Fi transmitter portion).
For the BT classic function was tested and demonstrated in report 230427001SZN-001.
For the BT BLE function was tested and demonstrated in report 230427001SZN-002.
For the 2.4GHz WIFI function was tested and demonstrated in report 230427001SZN-003.

1.3 Antenna description (15.203)

The EUT uses Integral Antenna which in accordance to Section 15.203 is considered sufficient to comply with the provisions of this section.

Antenna1 Gain: 3.13 dBi Max for 5G WIFI.
Antenna2 Gain: 3.23 dBi Max for 5G WIFI.
MIMO Gain: 6.19 dBi Max for 5G WIFI.

1.4 Peripherals equipment

Description	Manufacturer	Remark
TV (Provided by Intertek)	SONY	150B4CG
HDMI Cable (Provided by applicant)	N/A	unshielded, 30cm
Adaptor 1 (Provided by applicant)	N/A	Model: TPA-253050100UW01, Input: 100-240V~50/60Hz 0.2A, Output: DC 5.0V/1.0A
Adaptor 1 (Provided by applicant)	N/A	Model: PS06T050K1000UD Input: 100-240V~50/60Hz 0.25A Output: DC 5.0V/1.0A
Remote control (Provided by applicant)	N/A	N/A

2. Test specifications

2.1 Test standard

The EUT was performed according to the procedures in FCC Part 15 E, Section15.203, 15.207, 15.209, 15.407 and ANSI C63.10/2013, method of measurement: KDB 789033.

The test of radiated measurements according to FCC Part15 Section 15.33(a) had been conducted and the field strength of this frequency band was all meet limit requirement, thus we evaluate the EUT pass the specified test.

The AC power conducted emissions was invested over the frequency range from 0.15 MHz to 30 MHz using a receiver bandwidth of 9 kHz (15.207 paragraph).

Radiated emissions were invested cover the frequency range from 9KHz to 30MHz using a receiver RBW of 9kHz, from 30 MHz to 1000 MHz using a receiver RBW of 120 kHz record QP reading, and the frequency over 1 GHz using a spectrum analyzer RBW of 1 MHz, VBW of 3MHz, Detector=Peak record for Peak reading, RBW of 1 MHz, VBW of 3MHz, Detector=RMS record for Average reading recorded on the report.

The EUT setup configurations please refer to the photo of radiated setup photos.pdf & conducted setup photos.pdf.

2.2 Operation mode

The EUT was supplied by and it was run in TX mode that was controlled by client provided RF testing program.

The EUT was transmitted continuously during the test. The worst case test result was showed in the report.

With individual verifying, the maximum output power was found at 6 Mbps data rate for 802.11a mode, 6.5 Mbps data rate for 802.11n-HT20 mode, 13.5 Mbps data rate for 802.11n-HT40 mode, 29.3Mbps data rate for 802.11ac. The final tests were executed under these conditions and recorded in this report individually.

2.3 EUT Exercising Software

The EUT exercise program (provided by client) used during radiated and conducted testing was designed to exercise the various system components in a manner similar to a typical use. The worst case configuration is used in all specified testing.

Table for Parameters of Test Software Setting
During testing, Channel & Power Controlling Software provided by the customer was used to control the operating channel as well as the output power level. The RF output power selection is for the setting of RF output power expected by the customer and is going to be fixed on the firmware of the final end product.

Test software: CMD

3. Maximum Output Power test (FCC 15.407)

3.1 Operating environment

Temperature: 25 ℃
Relative Humidity: 55 %
Atmospheric Pressure: 1011 hPa

3.2 Test setup & procedure

The power output per FCC §15.407(a) was measured on the EUT using a 50 ohm SMA cable connected to Average Power Meter and the measurement method refer to 789033 D02. Power was read directly and cable loss correction (1.0dB) was added to the reading to obtain power at the EUT antenna terminals.

3.3 Limit

Frequency range (MHz)	Max Conducted TX Power	Max EIRP
5150~5250	30dBm (1W) for master device	4W (36dBm) with 6dBi antenna
	24dBm (250mW) for client device	
5250~5350	24dBm (250mW) or 11dBm+ 10logB*	1W (30dBm) with 6dBi antenna
5470~5725	24dBm (250mW) or 11dBm+ 10logB*	
5725~5850	30dBm (1W)	4W (36dBm) with 6dBi antenna

Remark: 1) *Where B is the 26dB emission Bandwidth in MHz.
2) The device was declared as Slave device.
3) Tx Power Reduction (dBm-by-dBi) required when antenna exceeds 6dBi.

3.4 Measured data of Maximum Output Power test results

Max Conducted TX Power

The more detail please refer to “Appendix of 230427001SZN-004” Appendix B1.

4. Power Spectrum Density test (FCC 15.407)

4.1 Operating environment

Temperature:	25	℃
Relative Humidity:	50	%
Atmospheric Pressure:	1013	hPa

4.2 Test setup & procedure

Method of Measurement:

The power spectrum density per FCC §15.407(a) was measured from the antenna port of the EUT using a 50 ohm spectrum analyzer with the resolution bandwidth set at 1MHz/500KHz, the video bandwidth set at 3 MHz/2MHz (measurement method refer to KDB 789033 D02). Power spectrum density was read directly and cable loss reading to obtain power at the EUT antenna terminals.

4.3 Limit

Frequency range(MHz)	Max Conducted Power Spectral Density
5150~5250	*17dBm/MHz for master device
	11dBm/MHz for mobile/portable client device
5250~5350	11dBm/MHz
5470~5725	11dBm/MHz
5725~5850	30dBm/500KHz

Remark: 1) The device was declared as Slave device.
2) Tx Power Reduction (dBm-by-dBi) required when antenna exceeds 6dBi.

4.4 Measured data of Power Spectrum Density test results

The more detail please refer to “Appendix of 230427001SZN-004” Appendix C.

5. Minimum 6 dB RF Bandwidth (FCC 15.407)

5.1 Operating environment

Temperature:	25	℃
Relative Humidity:	50	%
Atmospheric Pressure:	1011	hPa

5.2 Test setup & procedure

The Minimum 6 dB RF Bandwidth per 789033 D02 was measured from the antenna port of the EUT using a 50 ohm spectrum analyzer with the resolution bandwidth set at 100KHz, and set the video bandwidth (VBW) ≥ 3 x RBW. For each RF output channel investigated, the spectrum analyzer center frequency was set to the channel carrier. A PEAK output reading was taken, a DISPLAY line was drawn 6 dB lower than PEAK level. The 6dB bandwidth was determined from where the channel output spectrum intersected the display line.

For 26dB down Emission Bandwidth

The 26dB down Emission Bandwidth per 789033 D02 was measured from the antenna port of the EUT using a 50 ohm spectrum analyzer with the resolution bandwidth set RBW = approximately 1% of the emission bandwidth. Set the VBW > RBW, Detector = Peak, Trace mode = max hold (Measure the maximum width of the emission that is 26 dB down from the maximum of the emission. Compare this with the RBW setting of the analyzer. Readjust RBW and repeat measurement as needed until the RBW/EBW ratio is approximately 1%).

For 99% Occupied Bandwidth

The 99% Occupied Bandwidth per 789033 D02 was measured from the antenna port of the EUT using a 50 ohm spectrum analyzer with the resolution bandwidth set center frequency to the nominal EUT channel center frequency, set span = 1.5 times to 5.0 times the OBW, set RBW = 1 % to 5 % of the OBW, set VBW ≥ 3x RBW, The 99% occupied bandwidth was determined from where the channel output spectrum intersected the display line.

5.3 Limit

Frequency range(MHz)	Minimum 6 dB RF Bandwidth Limit
5150~5250	N/A
5250~5350	N/A
5470~5725	N/A
5725~ 5850	≥500KHz

5.4 Measured data of 6dB down Emission Bandwidth test results

The more detail please refer to “Appendix of 230427001SZN-004” Appendix A3.

Note: 99% Occupied Bandwidth within the U-NII-1 band and 26dB Emission Bandwidth for reference. The more detail please refer to “Appendix of 230427001SZN-004” Appendix A2 and Appendix A1.

6. Radiated Emission test (FCC 15.205 & 15.209 & 15.407)

6.1 Operating environment

Temperature:	23	℃
Relative Humidity:	56	%
Atmospheric Pressure	1011	hPa

6.2 Test setup & procedure

The Diagram below shows the test setup, which is utilized to make these measurements.

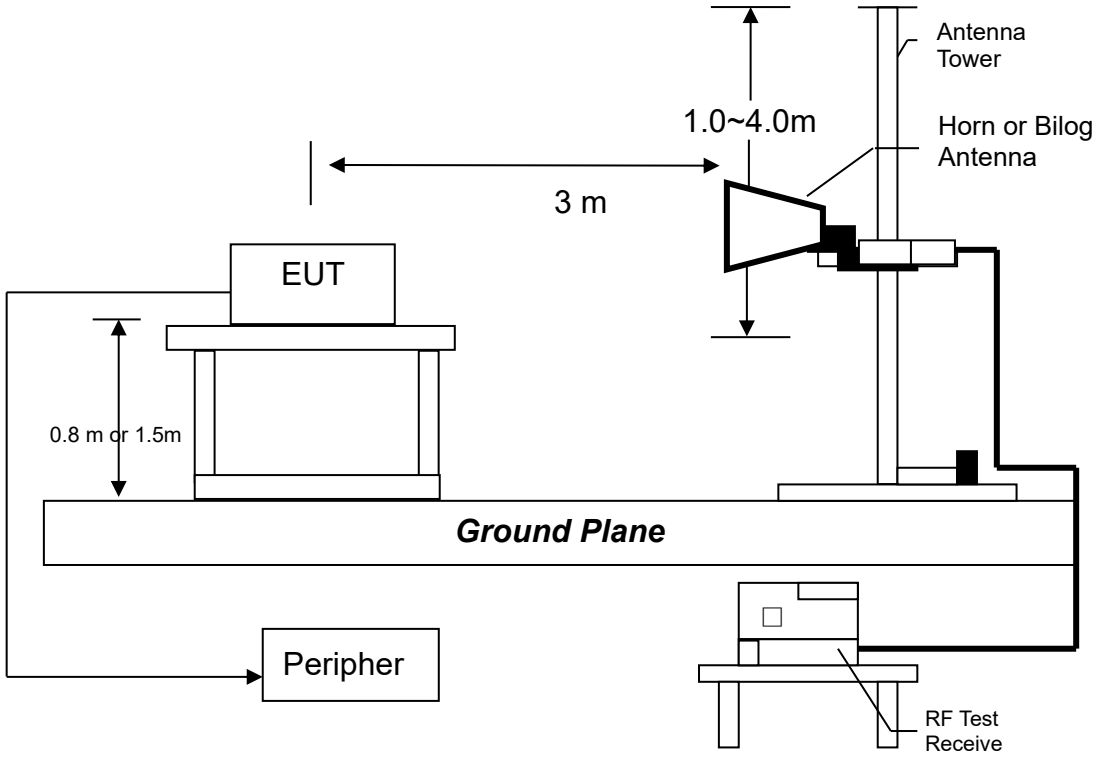

Radiated emission measurements were performed from 9KHz to tenth harmonic or 40GHz.

The EUT for testing is arranged on a styrene turntable with the height of 0.8m up to 1GHz and 1.5m above 1GHz. If some peripherals apply to the EUT, the peripherals will be connected to EUT and the whole system. During the test, all cables were arranged to produce worst-case emissions. The signal is maximized through rotation. The height of antenna and polarization is changing constantly for exploring for maximum signal level. The height of antenna can be up to 4 meters and down to 1 meter.

The measurement for radiated emission will be done at the distance of three meters unless the signal level is too low to measure at that distance. In the case of the reading under noise floor, a pre-amplifier is used and/or the test is conducted at a closer distance. And then all readings are extrapolated back to the equivalent three meter reading using inverse scaling with distance.

Testing settings (refer to KDB 789033 D02)
Peak Measurements below 1GHz
1, Analyzer center frequency was set to the frequency of the radiated spurious emission.
2, Span=encompass the entire emission
3, RBW=120KHz
4, Detector=Quasi-Peak
5, Trace was allowed to stabilize

Peak Measurements above 1GHz
1, Analyzer center frequency was set to the frequency of the radiated spurious emission.
2, Span=encompass the entire emission
3, RBW=1MHz
4, VBW=3MHz
4, Detector= Peak (Max-hold)
5, Trace was allowed to stabilize

Average Measurements above 1GHz
1, Analyzer center frequency was set to the frequency of the radiated spurious emission.
2, Span=encompass the entire emission
3, RBW=1MHz
4, VBW=3MHz
4, Detector= RMS (Max-hold)
5, Trace was allowed to stabilize

6.3 Limit

The spurious Emission shall test through the 10th harmonic or 40GHz (whichever is lower). In addition, radiated emissions which fall in the restricted bands, as defined in §15.205(a), must also comply with the radiated emission limits specified in §15.209(a).

Notes:

1, All emission out-side of the 5.15-5.35GHz & 5.47-5.725GHz band shall not exceed an EIRP of -27dBm/MHz (68.2dBuV/m, test distance: 3 meter), For the band 5.725-5.85GHz, all emissions shall be limited to a level of −27 dBm/MHz at 75 MHz or more above or below the band edge increasing linearly to 10 dBm/MHz at 25 MHz above or below the band edge, and from 25 MHz above or below the band edge increasing linearly to a level of 15.6 dBm/MHz at 5 MHz above or below the band edge, and from 5 MHz above or below the band edge increasing linearly to a level of 27 dBm/MHz at the band edge.

2, The spectrum is measured from 9KHz to the 10th harmonic of the fundamental frequency of the transmitter using QP detector below 1GHz, above 1GHz, average & peak measurements were taken using for test. The worst-case emission are reported however emission whose levels were not within 20dB of the respective limited were not reported.

3, The test was performed on EUT under 802.11a/n-HT20/n-HT40/ac-HT20/HT40/HT80 continuously transmitting mode. Simultaneous transmitting was considered during the testing. All mode had been tested, but only the worst-case is recorded in the following graph and table.

6.3.1 Field Strength Calculation

The field strength is calculated by adding the reading on the Spectrum Analyzer to the factors associated with preamplifiers (if any), antennas, cables, pulse desensitization and average factors (when specified limit is in average and measurements are made with peak detectors). A sample calculation is included below.

FS = RA + AF + CF - AG + PD

Where FS = Field Strength in dBμV/m
RA = Receiver Amplitude (including preamplifier) in dBμV
CF = Cable Attenuation Factor in dB
AF = Antenna Factor in dB
AG = Amplifier Gain in dB
PD = Pulse Desensitization in dB

In the radiated emission table which follows, the reading shown on the data table may reflect the preamplifier gain. An example of the calculations, where the reading does not reflect the preamplifier gain, follows:

FS = RA + AF + CF - AG + PD

Example

Assume a receiver reading of 62.0 dBμV is obtained. The antenna factor of 7.4 dB and cable factor of 1.6 dB is added. The amplifier gain of 29 dB is subtracted. The pulse desensitization factor of the spectrum analyzer was 0 dB. The net field strength for comparison to the appropriate emission limit is 32 dBμV/m. This value in dBμV/m was converted to its corresponding level in μV/m.

RA = 62.0 dBμV
AF = 7.4 dB
CF = 1.6 dB
AG = 29.0 dB
PD = 0 dB
FS = 62 + 7.4 + 1.6 - 29 + 0 = 42 dBμV/m

Level in mV/m = Common Antilogarithm [(42 dBμV/m)/20] = 125.9 μV/m

6.4 Radiated spurious emission test data

6.4.1 Measurement results: frequencies equal to or less than 1 GHz

Applicant: Luxshare Precision Industry Co.,Ltd.
Date of Test: 05 June 2023 Model: VSN:100133520
Worst Case Operating Mode: Simultaneous transmission

Radiated Emissions

ANT Polarity: Horizontal

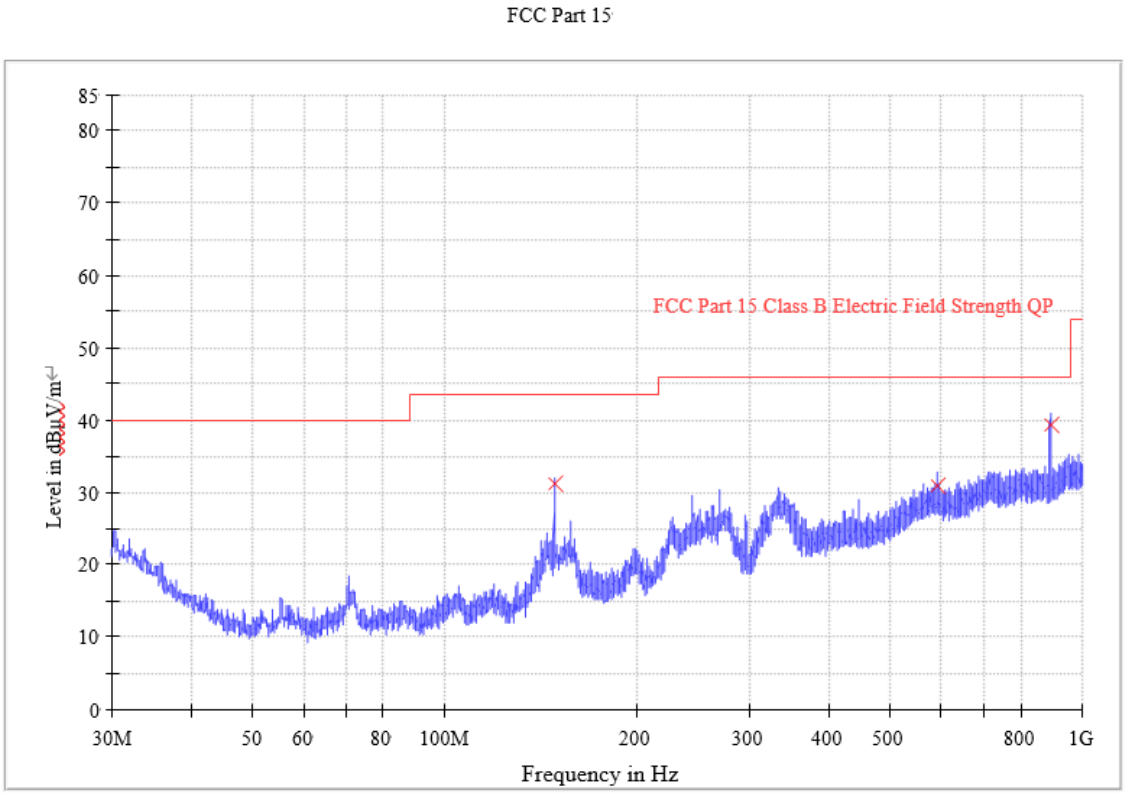

Frequency (MHz)	QuasiPeak (dBuV/m)	Meas. Time (ms)	Bandwidth (kHz)	Polarization	Corr. (dB/m)	Margin - QPK (dB)	Limit - QPK (dBuV/m)
148.275333	31.2	1000.0	120.000	H	16.1	12.3	43.5
593.246667	31.0	1000.0	120.000	H	29.1	15.0	46.0
889.800000	39.5	1000.0	120.000	H	31.7	6.5	46.0

NOTES:

1. Quasi-Peak detector is used for frequency below 1GHz.
2. All measurements were made at 3 meters. Harmonic emissions not detected at the 3-meter distances were measured at 0.3-meter and an inverse proportional extrapolation was performed to compare the signal level to the 3-meter limit. No other harmonic emissions than those reported were detected at a test distance of 0.3-meter.
3. Negative value in the margin column shows emission below limit.
4. All emissions are below the QP limit.

Applicant: Luxshare Precision Industry Co.,Ltd.
Date of Test: 05 June 2023 Model: VSN:100133520
Worst Case Operating Mode: Simultaneous transmission

Radiated Emissions

ANT Polarity: Vertical

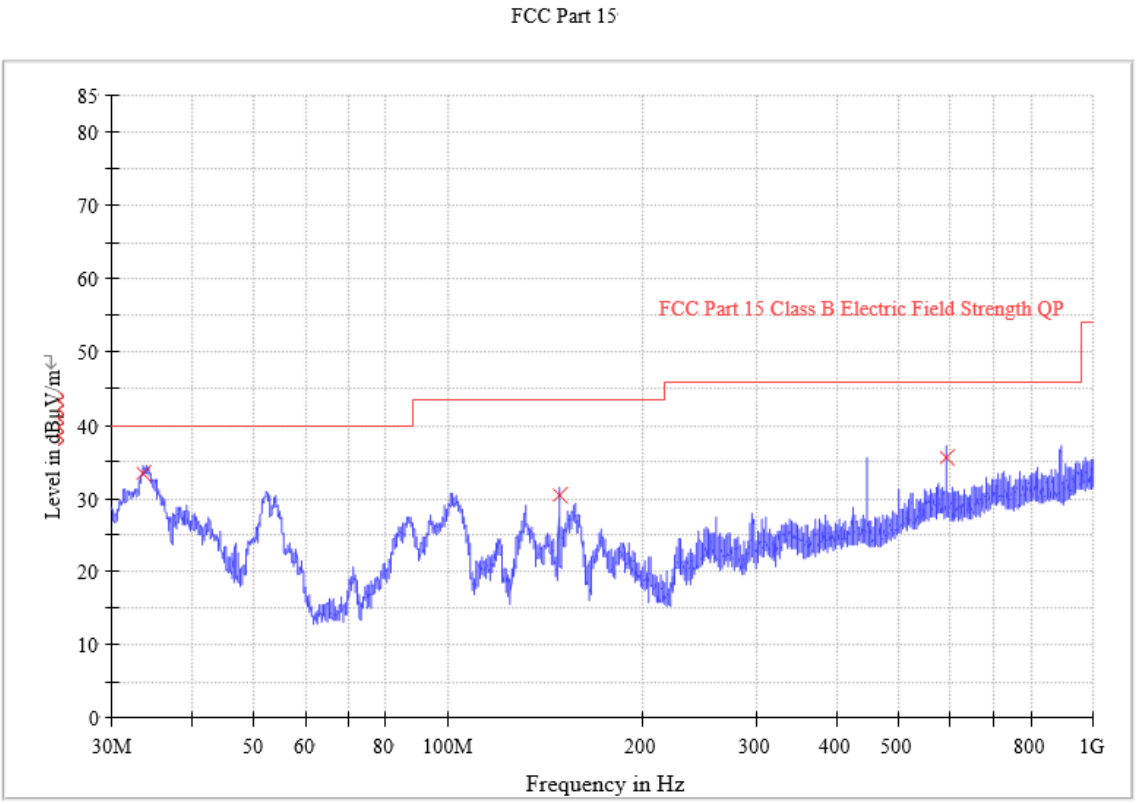

Frequency (MHz)	QuasiPeak (dBuV/m)	Meas. Time (ms)	Bandwidth (kHz)	Polarization	Corr. (dB/m)	Margin - QPK (dB)	Limit - QPK (dBuV/m)
33.600000	33.5	1000.0	120.000	V	20.7	6.5	40.0
148.372333	30.5	1000.0	120.000	V	16.1	13.0	43.5
593.376000	35.5	1000.0	120.000	V	29.1	10.5	46.0

NOTES:

1. Quasi-Peak detector is used for frequency below 1GHz.
2. All measurements were made at 3 meters. Harmonic emissions not detected at the 3-meter distances were measured at 0.3-meter and an inverse proportional extrapolation was performed to compare the signal level to the 3-meter limit. No other harmonic emissions than those reported were detected at a test distance of 0.3-meter.
3. Negative value in the margin column shows emission below limit.
4. All emissions are below the QP limit.

6.4.2 Measurement results: frequency above 1GHz

The worst case occurred at 802.11N-HT40 MIMO

Channel 38/27 Mbps

Polarization	Frequency (MHz)	Reading (dBμV)	Pre-Amp Gain (dB)	Antenna Factor (dB)	Net at 3m (dBμV/m)	Peak Limit at 3m (dBμV/m)	Margin (dB)
Horizontal	10380.000	56.1	36.3	38.9	58.7	68.2	-9.5
Horizontal	15570.000	53.1	34.7	41.0	59.4	68.2	-8.8

Polarization	Frequency (MHz)	Reading (dBμV)	Pre-Amp Gain (dB)	Antenna Factor (dB)	Net at 3m (dBμV/m)	Average Limit at 3m (dBμV/m)	Margin (dB)
Horizontal	10380.000	41.8	36.3	38.9	44.4	54.0	-9.6
Horizontal	15570.000	41.0	34.7	41.0	47.3	54.0	-6.7

Channel 46/27Mbps

Polarization	Frequency (MHz)	Reading (dBμV)	Pre-Amp Gain (dB)	Antenna Factor (dB)	Net at 3m (dBμV/m)	Peak Limit at 3m (dBμV/m)	Margin (dB)
Horizontal	10460.000	55.9	36.3	38.9	58.5	68.2	-9.7
Horizontal	15690.000	52.5	34.7	41.0	58.8	68.2	-9.4

Polarization	Frequency (MHz)	Reading (dBμV)	Pre-Amp Gain (dB)	Antenna Factor (dB)	Net at 3m (dBμV/m)	Average Limit at 3m (dBμV/m)	Margin (dB)
Horizontal	10460.000	42.0	36.3	38.9	44.6	54.0	-9.4
Horizontal	15690.000	41.9	34.7	41.0	48.2	54.0	-5.8

Channel 54/27Mbps

Polarization	Frequency (MHz)	Reading (dBμV)	Pre-Amp Gain (dB)	Antenna Factor (dB)	Net at 3m (dBμV/m)	Peak Limit at 3m (dBμV/m)	Margin (dB)
Horizontal	10540.000	55.2	36.3	38.9	57.8	68.2	-10.4
Horizontal	15810.000	52.9	34.7	41.0	59.2	68.2	-9.0

Polarization	Frequency (MHz)	Reading (dBμV)	Pre-Amp Gain (dB)	Antenna Factor (dB)	Net at 3m (dBμV/m)	Average Limit at 3m (dBμV/m)	Margin (dB)
Horizontal	10540.000	41.6	36.3	38.9	44.2	54.0	-9.8
Horizontal	15810.000	39.4	34.7	41.0	45.7	54.0	-8.3

Channel 62/27Mbps

Polarization	Frequency (MHz)	Reading (dBμV)	Pre-Amp Gain (dB)	Antenna Factor (dB)	Net at 3m (dBμV/m)	Peak Limit at 3m (dBμV/m)	Margin (dB)
Horizontal	10620.000	52.9	36.3	38.9	55.5	68.2	-12.7
Horizontal	15930.000	51.2	34.7	41.0	57.5	68.2	-10.7

Polarization	Frequency (MHz)	Reading (dBμV)	Pre-Amp Gain (dB)	Antenna Factor (dB)	Net at 3m (dBμV/m)	Average Limit at 3m (dBμV/m)	Margin (dB)
Horizontal	10620.000	42.1	36.3	38.9	44.7	54.0	-9.3
Horizontal	15930.000	39.6	34.7	41.0	45.9	54.0	-8.1

Channel 102/27Mbps

Polarization	Frequency (MHz)	Reading (dBμV)	Pre-Amp Gain (dB)	Antenna Factor (dB)	Net at 3m (dBμV/m)	Peak Limit at 3m (dBμV/m)	Margin (dB)
Horizontal	11020.000	52.3	36.3	38.9	54.9	68.2	-13.3
Horizontal	16530.000	49.5	34.7	41.0	55.8	68.2	-12.4

Polarization	Frequency (MHz)	Reading (dBμV)	Pre-Amp Gain (dB)	Antenna Factor (dB)	Net at 3m (dBμV/m)	Average Limit at 3m (dBμV/m)	Margin (dB)
Horizontal	11020.000	40.6	36.3	38.9	43.2	54.0	-10.8
Horizontal	16530.000	38.2	34.7	41.0	44.5	54.0	-9.5

Channel 110/27Mbps

Polarization	Frequency (MHz)	Reading (dBμV)	Pre-Amp Gain (dB)	Antenna Factor (dB)	Net at 3m (dBμV/m)	Peak Limit at 3m (dBμV/m)	Margin (dB)
Horizontal	11100.000	53.0	36.3	38.9	55.6	68.2	-12.6
Horizontal	16650.000	50.9	34.7	41.0	57.2	68.2	-11.0

Polarization	Frequency (MHz)	Reading (dBμV)	Pre-Amp Gain (dB)	Antenna Factor (dB)	Net at 3m (dBμV/m)	Average Limit at 3m (dBμV/m)	Margin (dB)
Horizontal	11100.000	42.2	36.3	38.9	44.8	54.0	-9.2
Horizontal	16650.000	40.2	34.7	41.0	46.5	54.0	-7.5

Channel 134/27Mbps

Polarization	Frequency (MHz)	Reading (dBμV)	Pre-Amp Gain (dB)	Antenna Factor (dB)	Net at 3m (dBμV/m)	Peak Limit at 3m (dBμV/m)	Margin (dB)
Horizontal	11340.000	51.6	36.3	39.0	54.3	68.2	-13.9
Horizontal	17010.000	49.4	34.7	41.2	55.9	68.2	-12.3

Polarization	Frequency (MHz)	Reading (dBμV)	Pre-Amp Gain (dB)	Antenna Factor (dB)	Net at 3m (dBμV/m)	Average Limit at 3m (dBμV/m)	Margin (dB)
Horizontal	11340.000	41.5	36.3	39.0	44.2	54.0	-9.8
Horizontal	17010.000	41.0	34.7	41.2	47.5	54.0	-6.5

Channel 151/27Mbps

Polarization	Frequency (MHz)	Reading (dBμV)	Pre-Amp Gain (dB)	Antenna Factor (dB)	Net at 3m (dBμV/m)	Peak Limit at 3m (dBμV/m)	Margin (dB)
Horizontal	11510.000	51.9	36.3	39.0	54.6	68.2	-13.6
Horizontal	17265.000	49.4	34.7	41.2	55.9	68.2	-12.3

Polarization	Frequency (MHz)	Reading (dBμV)	Pre-Amp Gain (dB)	Antenna Factor (dB)	Net at 3m (dBμV/m)	Average Limit at 3m (dBμV/m)	Margin (dB)
Horizontal	11510.000	42.6	36.3	39.0	45.3	54.0	-8.7
Horizontal	17265.000	40.7	34.7	41.2	47.2	54.0	-6.8

Channel 159/27Mbps

Polarization	Frequency (MHz)	Reading (dBμV)	Pre-Amp Gain (dB)	Antenna Factor (dB)	Net at 3m (dBμV/m)	Peak Limit at 3m (dBμV/m)	Margin (dB)
Horizontal	11590.000	52.0	36.3	39.0	54.7	68.2	-13.5
Horizontal	17385.000	49.4	34.7	41.2	55.9	68.2	-12.3

Polarization	Frequency (MHz)	Reading (dBμV)	Pre-Amp Gain (dB)	Antenna Factor (dB)	Net at 3m (dBμV/m)	Average Limit at 3m (dBμV/m)	Margin (dB)
Horizontal	11590.000	42.0	36.3	39.0	44.7	54.0	-9.3
Horizontal	17385.000	39.6	34.7	41.2	46.1	54.0	-7.9

* Emission within the restricted band meets the requirement of section 15.205. The corresponding limit as per 15.209 is based on Quasi peak limit for frequencies below 1000 MHz and average limit for frequencies over 1000 MHz. The radio frequency emissions above 1GHz also meet corresponding 20dB permitted peak limit with a peak detector function. All unwanted emissions outside of the 5.15-5.35GHz & 5.47-5.725GHz & 5725-5850 bands are complied with the limit.

7. Power Line Conducted Emission test

7.1 Operating environment

Temperature:	24	℃
Relative Humidity:	55	%
Atmospheric Pressure	1011	hPa

7.2 Test setup & procedure

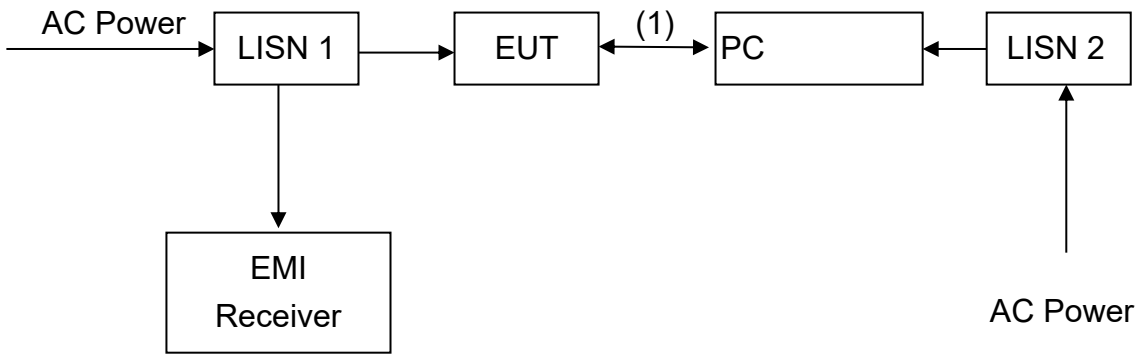

The EUT are connected to the main power through a line impedance stabilization network (LISN). This provides a 50 ohm/50 uH coupling impedance for the measuring equipment. The peripheral devices are also connected to the main power through a LISN that provides a 50 ohm/50 uH coupling impedance with 50 ohm termination.
Both sides (Line and Neutral) of AC line are checked for maximum conducted interference. In order to find the maximum emission, the relative positions of equipment and all of the interface cables must be changed according to ANSI C63.10/2013 on conducted measurement.
The bandwidth of the field strength meter (R & S Test Receiver ESCI 30) is set at 9 kHz.

7.3 Limit

Frequency (MHz)	Conducted Limit (dBuV)	
	Q.P.	Ave.
0.15~0.50	66 – 56*	56 – 46*
0.50~5.00	56	46
5.00~30.0	60	50

*Decreases with the logarithm of the frequency.

7.4 Power Line Conducted Emission test data

Applicant: Luxshare Precision Industry Co.,Ltd.
Date of Test: 01 June 2023 Model: VSN:100133520
Worst Case Operating Mode: Simultaneous transmission
Phase: Live

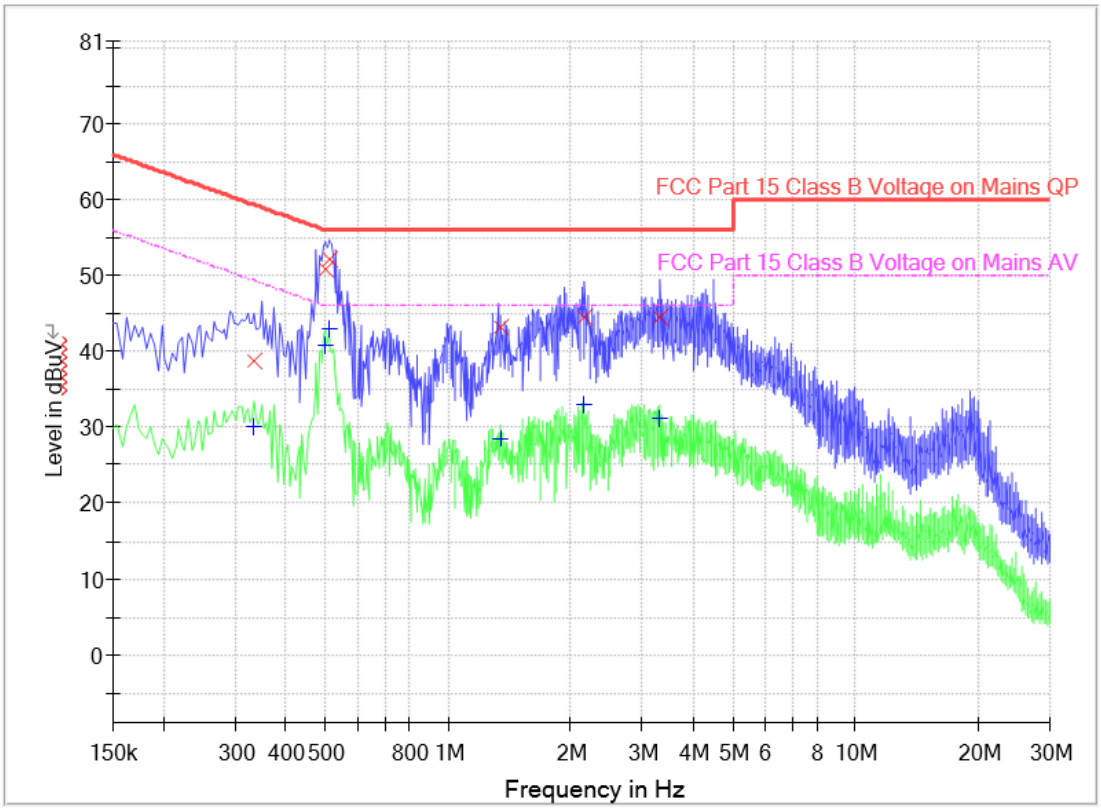

Result Table QP

Frequency (MHz)	QuasiPeak (dB μ V)	Line	Corr. (dB)	Margin (dB)	Limit (dB μ V)
0.334000	38.9	L	9.7	20.5	59.4
0.498000	50.9	L	9.7	5.1	56.0
0.510000	52.3	L	9.7	3.7	56.0
1.338000	43.2	L	9.7	12.8	56.0
2.158000	44.5	L	9.7	11.5	56.0
3.298000	44.6	L	9.7	11.4	56.0

Result Table AV

Frequency (MHz)	Average (dB μ V)	Line	Corr. (dB)	Margin (dB)	Limit (dB μ V)
0.334000	30.1	L	9.7	19.2	49.4
0.498000	41.0	L	9.7	5.1	46.0
0.510000	42.8	L	9.7	3.2	46.0
1.338000	28.4	L	9.7	17.6	46.0
2.158000	33.1	L	9.7	12.9	46.0
3.298000	31.2	L	9.7	14.8	46.0

Remark:
1. Corr. Factor (dB) = LISN Factor (dB) + Cable Loss (dB)
2. Margin (dB) = Limit (dBuV) – Level (dBuV)

Applicant: Luxshare Precision Industry Co.,Ltd.
Date of Test: 01 June 2023
Model: VSN:100133520
Worst Case Operating Mode: Simultaneous transmission
Phase: Neutral

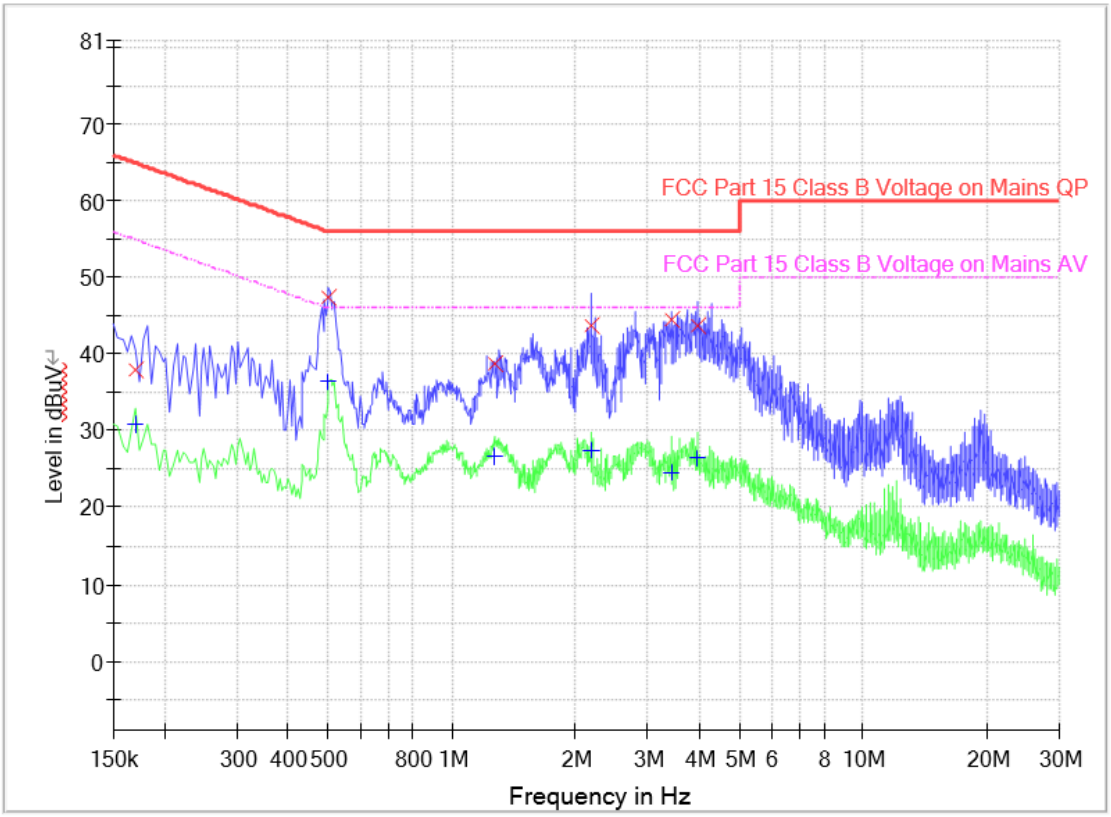

Result Table QP

Frequency (MHz)	QuasiPeak (dB μ V)	Line	Corr. (dB)	Margin (dB)	Limit (dB μ V)
0.170000	38.1	N	9.6	26.9	65.0
0.502000	47.4	N	9.6	8.6	56.0
1.266000	38.7	N	9.7	17.3	56.0
2.178000	43.7	N	9.7	12.3	56.0
3.430000	44.6	N	9.7	11.4	56.0
3.946000	43.7	N	9.7	12.3	56.0

Result Table AV

Frequency (MHz)	Average (dB μ V)	Line	Corr. (dB)	Margin (dB)	Limit (dB μ V)
0.170000	31.0	N	9.6	24.0	55.0
0.502000	36.3	N	9.6	9.7	46.0
1.266000	26.6	N	9.7	19.4	46.0
2.178000	27.5	N	9.7	18.5	46.0
3.430000	24.5	N	9.7	21.5	46.0
3.946000	26.5	N	9.7	19.5	46.0

Remark:
1. Corr. Factor (dB) = LISN Factor (dB) + Cable Loss (dB)
2. Margin (dB) = Limit (dBuV) – Level (dBuV)

8. Frequency Stability Test

8.1 Test setup & procedure

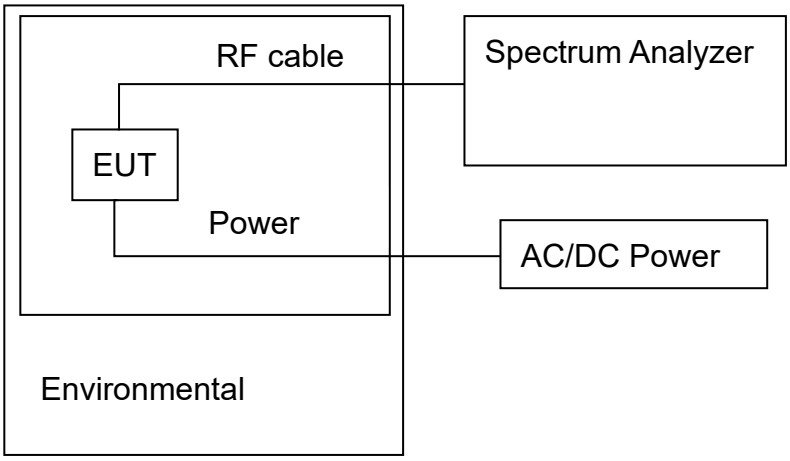

Note1: The frequency stability is measured with the temperature variation range of 0˚C to +40˚C, and voltage supply variation range of 85% to 115% of nominal AC supply voltage.

Note2: To ensure emission at the band-edge is maintained within the authorized band, the frequency 802.11a/n-HT20/n-HT40/ac-HT20/HT40/HT80 channel 36, 48, 52, 64, 100, 140, 149, 165, 38, 46, 54, 62, 102, 134, 151, 159, 42, 58, 106, 155 are selected to test and the worst case was reported.

8.2 Frequency Stability Test Data

20˚C is taken as temperature in normal condition (NT).
120.0 VAC is normal voltage (NV)
102.0 VAC is low voltage (LV)
138 VAC is high voltage (HV)

The more detail please refer to “Appendix of 221125030SZN-004” Appendix D.

Note: All emissions are maintained within the band of operation under all conditions of normal operation as specified in the user manual. It fulfills the requirement of 15.407(g).

9. Dynamic Frequency Selection (DFS) (FCC 15.407)

9.1 Requirement

Applicability of DFS Requirements Prior to Use of a Channel

Requirement	Operational Mode Mode		
	Master	Client Without Radar Detection	Client with Radar Detection
Non-Occupancy Period	Yes	Not Required	Yes
DFS Detection Threshold	Yes	Not Required	Yes
Channel Availability Check Time	Yes	Not Required	Not Required
U-NII Detection Bandwidth	Yes	Not Required	Yes

Applicability of DFS requirements during normal operation

Requirement	Operational Mode	
	Master Device or Client with Radar Detection	Client Without Radar Detection
DFS Detection Threshold	Yes	Not Required
Channel Closing Transmission Time	Yes	Yes
Channel Move Time	Yes	Yes
U-NII Detection Bandwidth	Yes	Not Required

Additional requirements for devices with multiple bandwidth modes	Master Device or Client with Radar Detection	Client Without Radar Detection
U-NII Detection Bandwidth and Statistical Performance Check	All BW modes must be tested	Not required
Channel Move Time and Channel Closing Transmission Time	Test using widest BW mode available	Test using the widest BW mode available for the link
All other tests	Any single BW mode	Not required
Note: Frequencies selected for statistical performance check should include several frequencies within the radar detection bandwidth and frequencies near the edge of the radar detection bandwidth. For 802.11 devices it is suggested to select frequencies in each of the bonded 20 MHz channels and the channel center frequency.		

Note: EUT is a client without Radar detection capabilities.

9.1.1 DFS Detection Thresholds for Master or Client Devices with DFS Detection

Maximum Transmit Power	Values (See Notes 1, 2, and 3)
EIRP ≥ 200 milliwatt	-64 dBm
EIRP < 200 milliwatt and power spectral density < 10 dBm/MHz	-62 dBm
EIRP < 200 milliwatt that do not meet the power spectral density requirement	-64 dBm

Note 1: This is the level at the input of the receiver assuming a 0 dBi receive antenna.
Note 2: Throughout these test procedures an additional 1 dB has been added to the amplitude of the test transmission waveforms to account for variations in measurement equipment. This will ensure that the test signal is at or above the detection threshold level to trigger a DFS response.
Note3: EIRP is based on the highest antenna gain. For MIMO devices refer to KDB Publication 662911 D01.

Parameter	Value
Non-Occupancy Period	Minimum 30 minutes
Channel Availability Check Time	60 Seconds
Channel Move Time	10 seconds (see note 1)
Channel Closing Transmission Time	200 ms + an aggregate of 60 ms over remaining 10 Second period. (see note 1 and 2)
U-NII Detection Bandwidth	Minimum 100% of the U-NII 99% transmission power bandwidth. (see note 3)

Note 1: Channel Move Time and the Channel Closing Transmission Time should be performed with Radar Type 0. The measurement timing begins at the end of the Radar Type 0 burst.
Note 2: The Channel Closing Transmission Time is comprised of 200 milliseconds starting at the beginning of the Channel Move Time plus any additional intermittent control signals required to facilitate a Channel move (an aggregate of 60 milliseconds) during the remainder of the 10 second period. The aggregate duration of control signals will not count quiet periods in between transmissions.
Note 3: During the U-NII Detection Bandwidth detection test, radar type 0 should be used. For each frequency step the minimum percentage of detection is 90 percent. Measurements are performed with no data traffic.

9.1.2 Radar Test Waveforms

Test procedures were made in accordance to KDB 905462 D02 UNII DFS Compliance Procedures New Rules v02, for more radar test waveform details please refer section 6 of KDB 905462 D02 UNII DFS Compliance Procedures New Rules v02.

9.2 Test setup

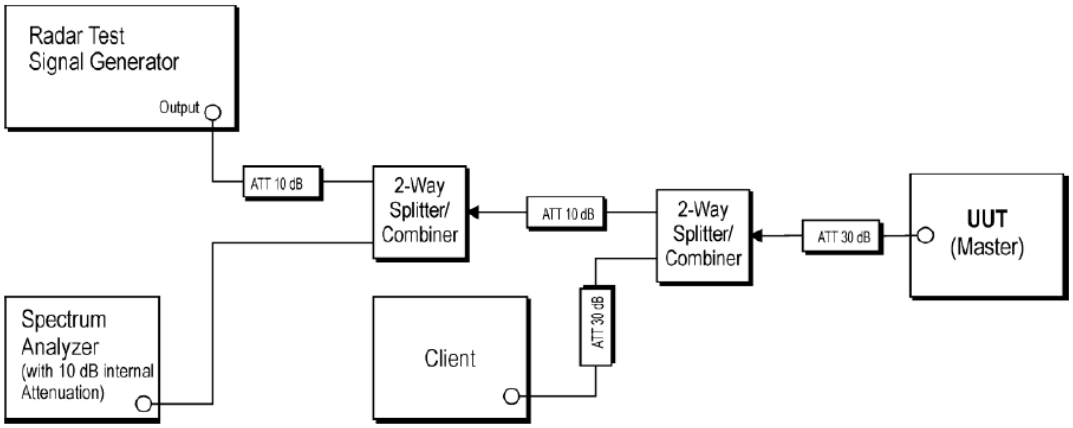

Setup for Master with injection at the Master

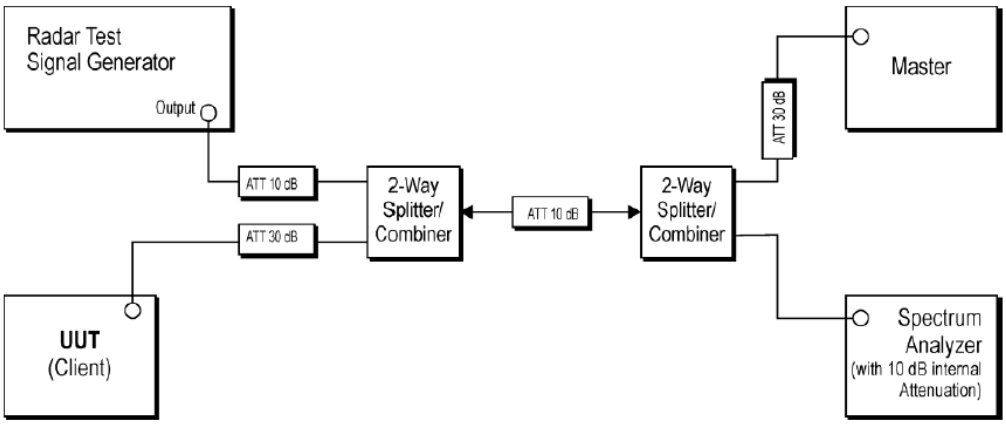

Setup for Client with injection at the Master

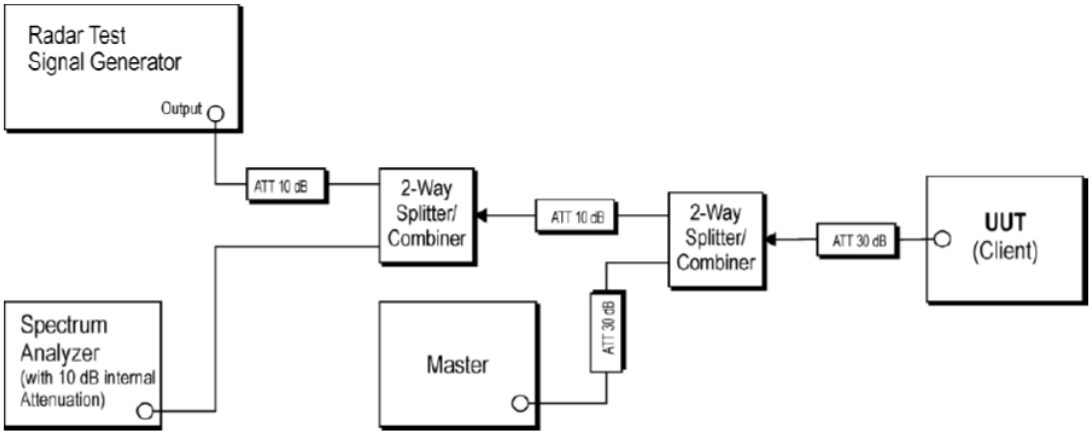

Setup for Client with injection at the Client

Note: EUT is a client without DFS detection capabilities. Test procedures were made in accordance to KDB 905462 D02 UNII DFS Compliance Procedures New Rules v02. DFS testing was setup as a client with injection into the master.

9.3 In-Service Monitoring for Channel Move Time, Channel Closing Transmission Time and Non-Occupancy Period

9.3.1 Test Procedure

The EUT was configured to communicate with a master device. The test file was streamed from the Master to the Client (EUT) on the selected test channel. Measurements were made while utilizing the widest bandwidth of the EUT.

Channel closing transmission time and channel move time were measured by applying a radar type 0 at threshold + 1dB to the EUT. The EUT transmissions were observed on the EUT center channel. The time between the end of the applied radar waveform and the final transmission on the channel is the channel move time. The channel closing transmission time comprises only those fragments of the channel move time during which the EUT transmits.

The channel loading of approximately 19%.

The Channel Move time shall be less than 10 seconds
The Channel Close time shall be 200ms +60ms of aggregate time.
The Non-occupancy time shall 30 minutes or greater.

9.3.2 Calibration Results

Ant1:

Radar Type 0 Calibration:

Frequency	Radar Waveform Length:	Detection Threshold level
5290MHz	0.025704s	-62.65 dBm

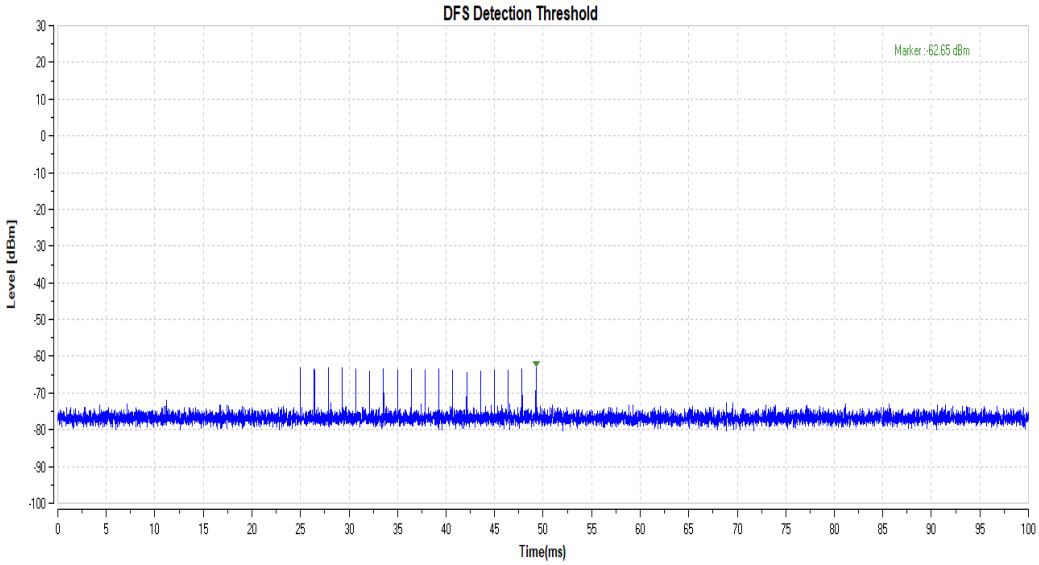

Frequency	Radar Waveform Length:	Detection Threshold level
5530MHz	0.025704s	-62.28 dBm

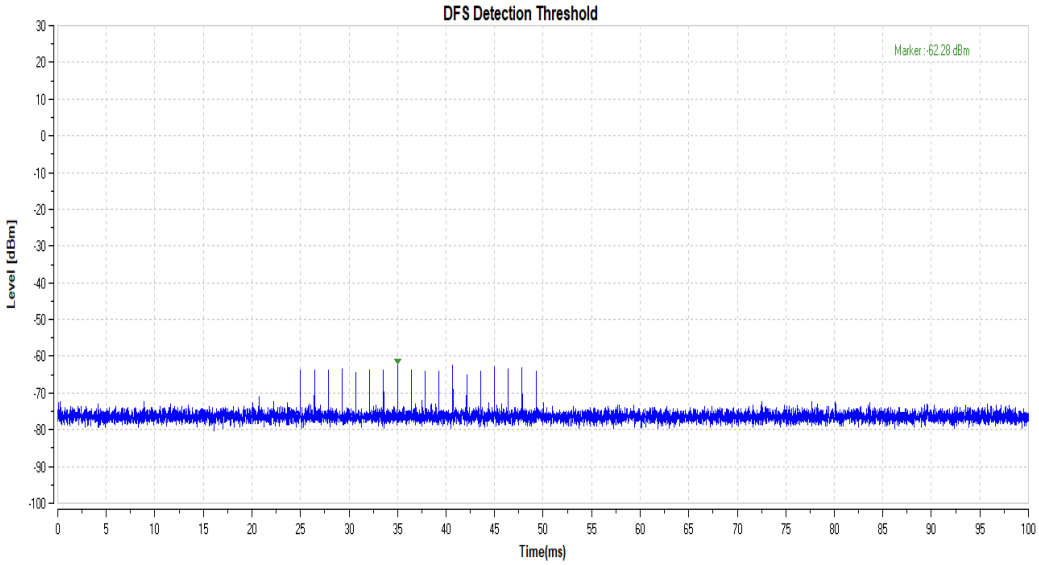

9.3.3 Channel Move time and Channel Closing Transmission Time Test Results

Frequency	Bandwidth	Channel Move Time [ms]	Limit [ms]	Channel Closing Transmission [ms]	Limit [ms]	Verdict
5290MHz	80 MHz	115.7	10000	200.0	260	PASS
5530MHz	80 MHz	113.1	10000	200.0	260	PASS

Test Graph:

5290 MHz

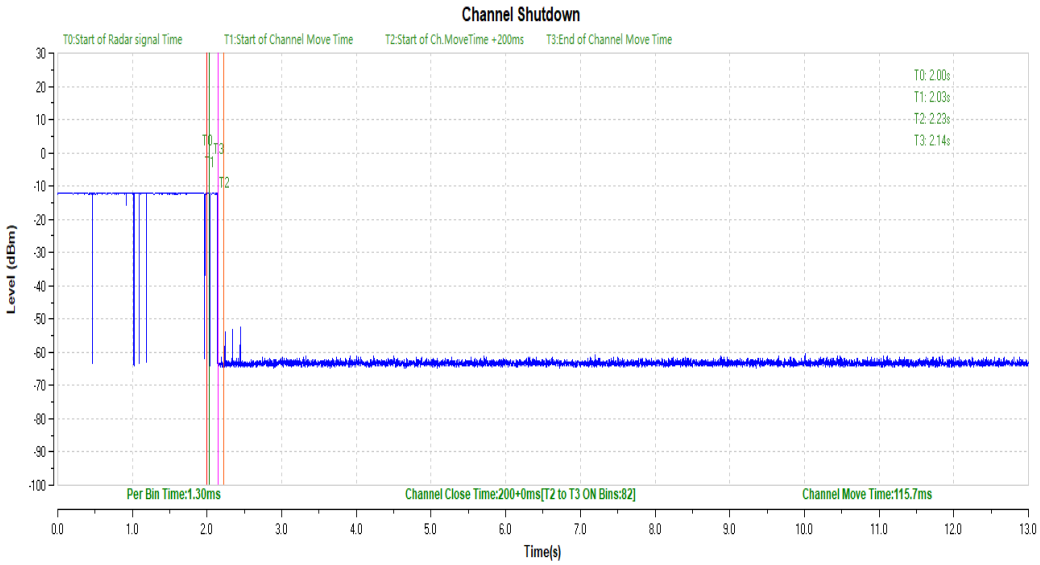

5530MHz

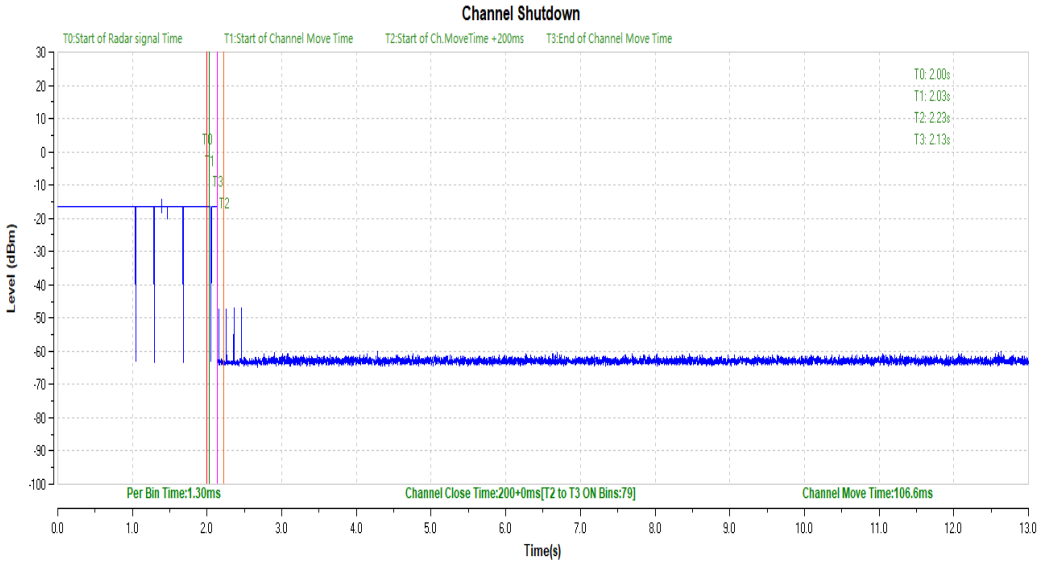

9.3.4 Non-Occupancy Period Test Results

Frequency	Bandwidth	Measured Value	Limit Requirements	Verdict
5290MHz	80 MHz	> 30min	30min	Pass
5530MHz	80 MHz	> 30min	30min	Pass

Test Graph:

5290 MHz

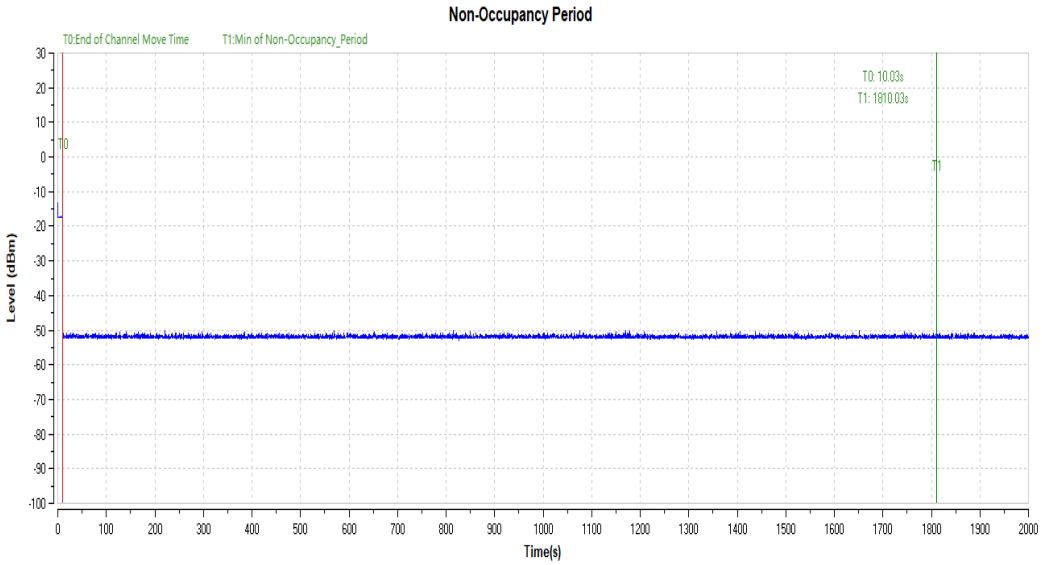

5530MHz

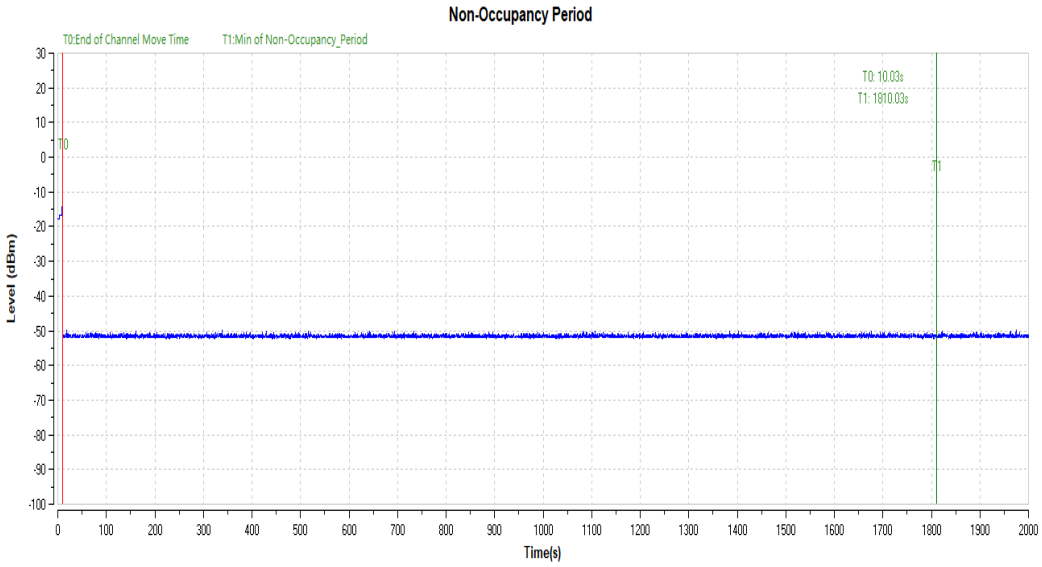

Appendix A: Test equipment list

Equipment No.	Equipment	Manufacturer	Model No.	Serial No.	Cal. Date	Due Date
SZ182-02	RF Power Meter	Anritsu	ML2496A	1302005	2023-04-28	2024-04-28
SZ182-02-01	Pulse Power Sensor	Anritsu	MA2411B	1207429	2023-04-28	2024-04-28
SZ070-20	Combiner	Mini-Circuits	ZN2PD-63-S+	---	2023-04-27	2024-04-27
SZ070-21	Combiner	Mini-Circuits	ZN2PD-63-S+	---	2023-04-27	2024-04-27
SZ056-05	Spectrum Analyzer	Agilent	E4407B	US40522113	2022-12-19	2023-12-19
SZ180-13	MXG Vector Signal Generator	Keysight	N5182B	MY53051328	2022-10-17	2023-10-17
SZ061-03	BiConiLog Antenna	ETS	3142E	00217919	2021-07-07	2024-07-07
SZ061-06	Active Loop Antenna	Electro-Metrics	EM-6876	217	2021-05-18	2024-05-18
SZ061-09	Horn Antenna	ETS	3115	00092346	2022-10-14	2025-10-14
SZ061-07	Pyramidal Horn Antenna	ETS	3160-09	00083067	2022-08-31	2025-05-31
SZ185-03	EMI Receiver	R&S	ESR7	101975	2023-04-27	2024-04-27
SZ056-07	Signal Analyzer	R&S	FSV40	101214	2023-01-06	2024-01-06
SZ181-04	Preamplifier	Agilent	8449B	3008A02474	2023-04-27	2024-04-27
SZ188-01	Anechoic Chamber	ETS	RFD-F/A-100	4102	2021-12-12	2024-12-12
SZ062-02	RF Cable	RADIALL	RG 213U	--	2022-07-18	2023-07-18
SZ062-05	RF Cable	RADIALL	0.04-26.5GHz	--	2022-07-18	2023-07-18
SZ062-12	RF Cable	RADIALL	0.04-26.5GHz	--	2022-07-18	2023-07-18
SZ067-25	Notch Filter	Micro-Tronics	BRM50716	--	2023-04-27	2024-04-27
SZ067-04	Notch Filter	Micro-Tronics	BRM50702-02	--	2022-07-08	2023-07-08
SZ185-02	EMI Test Receiver	R&S	ESCI	100692	2023-04-27	2024-04-27
SZ187-02	Two-Line V-Network	R&S	ENV216	100073	2022-12-20	2025-12-20
SZ188-03	Shielding Room	ETS	RFD-100	4100	2023-04-27	2024-04-27
SZ016-12	Programmable Temperature & Humidity Chamber	Taili	MHK-120NK	AB0105	2022-12-23	2023-12-23

Expanded uncertainty of radiated emission measurement is ±4.9 dB.

Expanded uncertainty of conducted emission measurement is ±3.6 dB.

********** End of Report**********