FCC ID : 2AYZ9-GP20

GP20

Professional gaming wireless headset manual

■ Product maintenance

Before using the product, please read the following suggestions to help you understand the warranty terms and extend the life of the product.

- Keep the product dry and do not place it in a humid place to avoid short-circuiting the internal circuit of the product. Avoid using this product during intense exercise to prevent sweat from penetrating into the product and causing damage.
- Do not place the product in a place exposed to sunlight or high temperature. High temperatures can shorten the life of electronic components, damage batteries,and deform plastic parts.
- Do not place the product in a place that is too cold to avoid damage to the internal circuit board.
- Do not attempt to disassemble the product. Unprofessionals may damage the product.
- Do not drop, strongly vibrate or impact the product, so as not to damage the internal circuit.
- Do not use strong chemicals or detergents to clean the headset.
- Do not scratch the product surface with sharp objects to avoid damaging the shell and appearance. If the product cannot work normally, please send it to a qualified maintenance organization, and the staff will be eager to help you solve the problem.

We recommend gently pulling away the headset before wearing it on the head to minimize the pressure from the head beam. However, do not overstretch the headset to avoid exceeding its stretchable range.

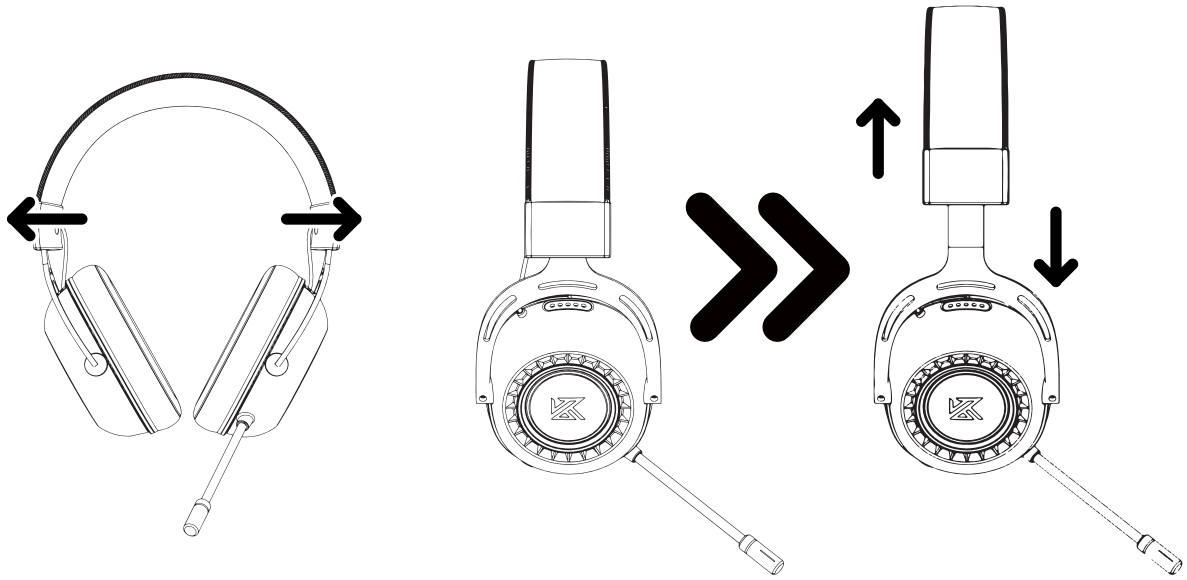

■ Contents

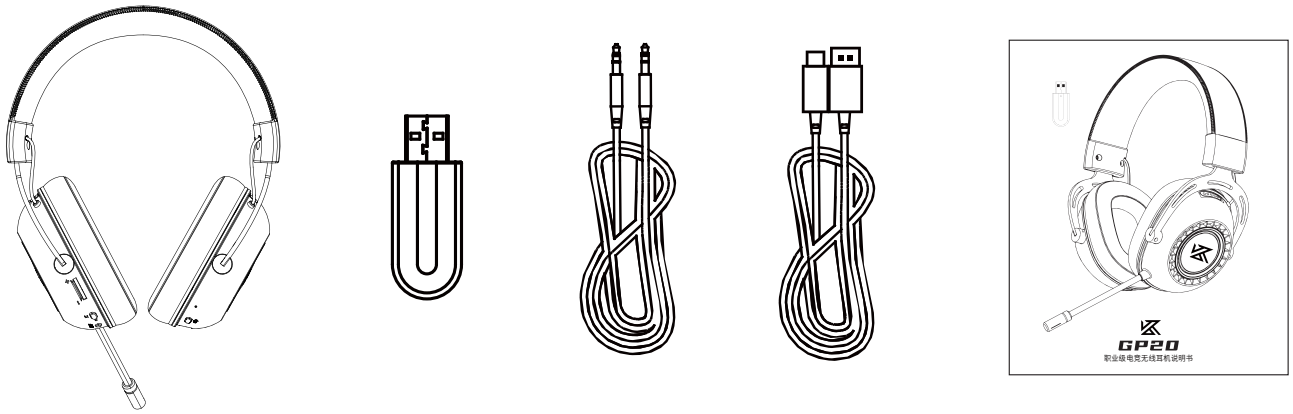

1. GP20 professional E-sports wireless headset * 1
2. 3.5mm audio cable * 1
3. Headset manual * 1
4. USB transmitter*1
5. Type-C charging cable*1

■ Parts

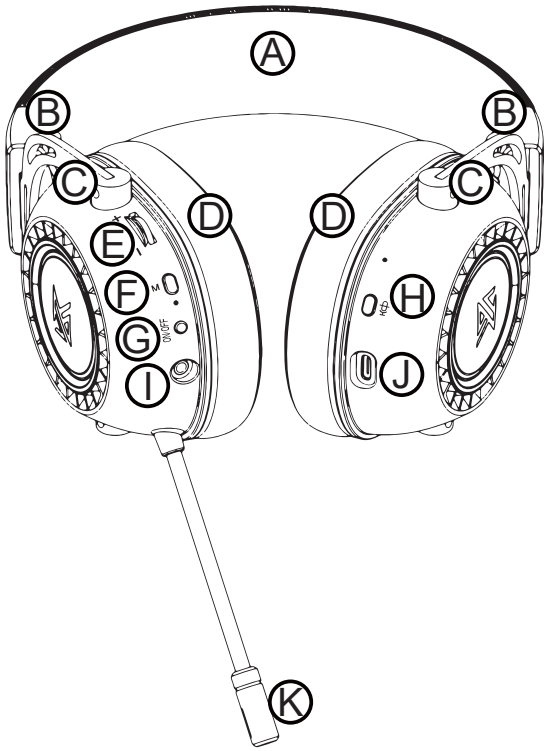

A . Comfortable leather headrest
B . Adjustable telescopic beam
C . Rotatable shaft
D . Comfortable leather ear pads .
E . Volume control wheel
F . M multifunction button
G . ON/OFF button
H . Microphone mute button
I . 3.5MM headphone jack
J . TYPE-C charging port
K . Noise Cancelling Microphone

■ Operation guide

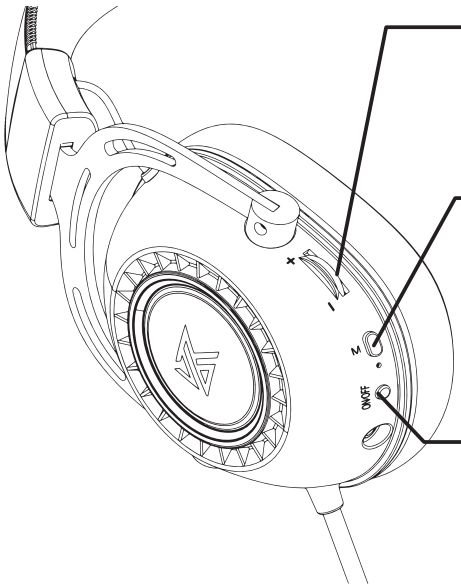

Raise the volume scroll wheel up
Lower the volume scroll down

Press the button 3 times to switch 2.4G/Bluetooth mode
Short press the button once to turn on/off RGB Mode

Long press for 2 seconds to turn on/off
Short press once to play/pause
Short press once to answer/end call

Short press once to turn microphone on/off

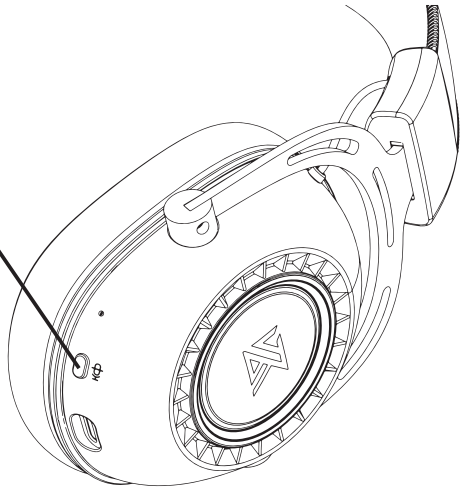

■ How to connect GP20

Connect to GP20 in Bluetooth mode

① When the headset is turned on, triple-click the M button to switch the Bluetooth /2.4G mode. When you hear the prompt sound "Bluetooth mode",it means that the headset enters the Bluetooth mode.
② Open the device to be connected, search and connect the GP20 within the signal range.
③ When you hear the prompt sound "connected" and the blue light flashes every 10 seconds, it means the connection is successful.

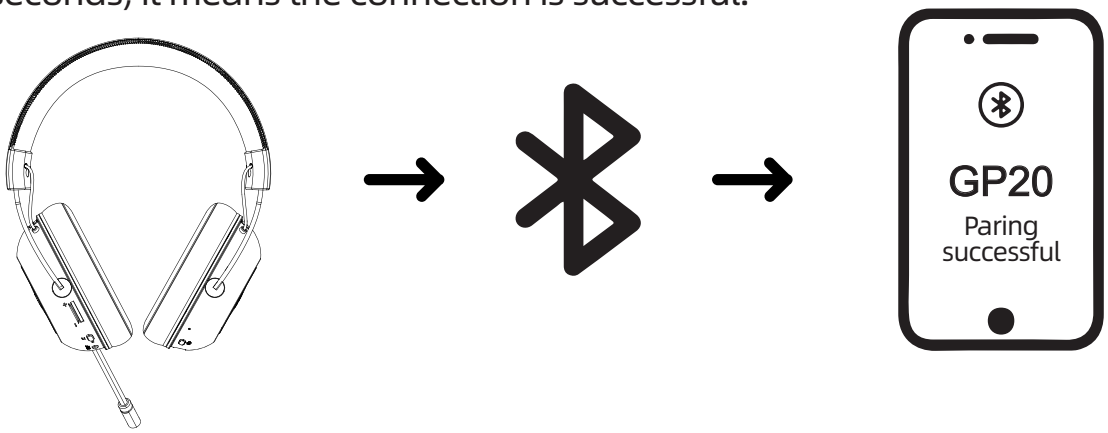

Connect to GP20 in 2.4G mode

① When the headset is turned on, triple-click the M button to switch the Bluetooth /2.4G mode. When you hear the prompt sound "USB mode", it means that the headset enters the 2.4G mode.
② Plug the USB transmitter into the device, within the connection distance, the transmitter will automatically search and connect to the GP20.
③ When you hear the prompt sound "connected" and the blue light flashes every 10 seconds, it means the connection is successful.
④ Support PC/PS4/PS5/MAC/SWITCH in 2.4G mode.

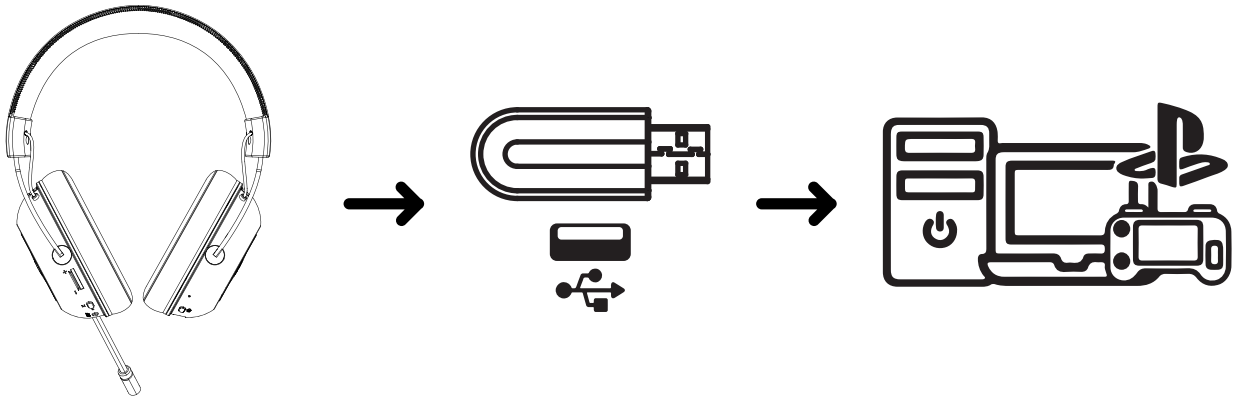

Connect to GP20 in wired mode

① Connect GP20 directly to the device with the 3.5MM audio cable included in the box.

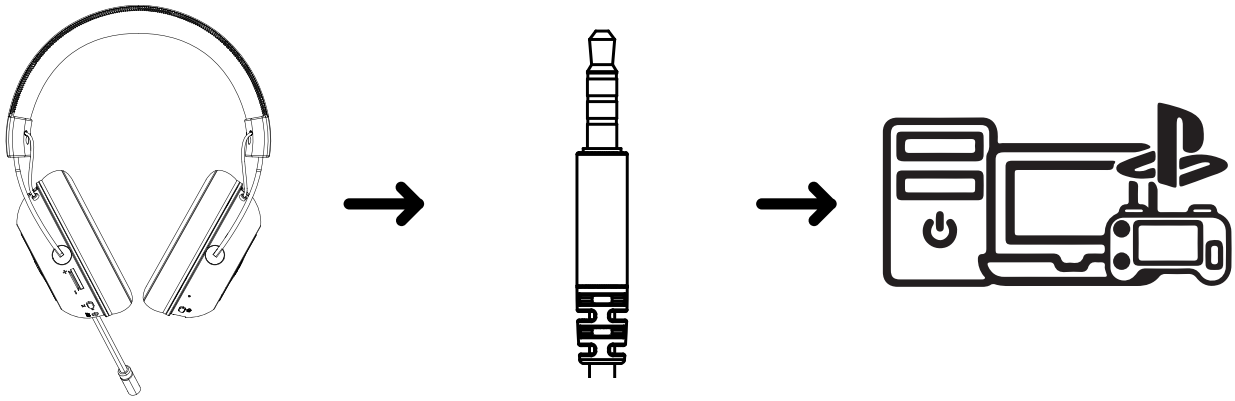

■ How to install ear pads.

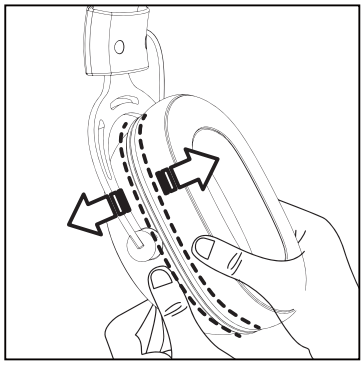

1. Use your thumb and index finger to pinchthe ear pads and earphone cavity respectively.

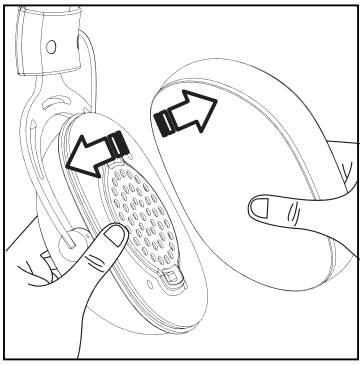

2. Slightly pull the headset and ear pads in the opposite direction to remove the ear pads.

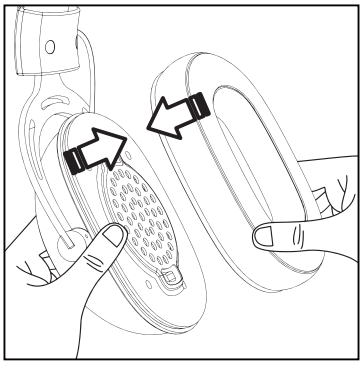

3. Place the headset and ear pads closely and press it slightly harder to restore it.

■ Specifications

Model:	KZ-GP20	Battery life:	About 68 hours
Weight:	355±10g	Battery capacity:	1200MAH
Frequency:	20HZ-20KHZ	Charging port:	2.4G/Bluetooth 5.0
Impedance:	32Ω	Wireless connections:	Type-c
Sensitivity:	95DB±3DB	Bluetooth distance:	≥10 meters

NOTE: This equipment has been tested and found to comply with the limits for a Class B digital device, pursuant to part 15 of the FCC Rules. These limits are designed to provide reasonable protection against harmful interference in a residential installation. This equipment generates uses and can radiate radio frequency energy and, if not installed and used in accordance with the instructions, may cause harmful interference to radio communications. However, there is no guarantee that interference will not occur in a particular installation. If this equipment does cause harmful interference to radio or television reception, which can be determined by turning the equipment off and on, the user is encouraged to try to correct the interference by one or more of the following measures:

- Reorient or relocate the receiving antenna.
- Increase the separation between the equipment and receiver.
-Connect the equipment into an outlet on a circuit different from that to which the receiver is connected.
-Consult the dealer or an experienced radio/TV technician for help.

Changes or modifications not expressly approved by the party responsible for compliance could void the user's authority to operate the equipment.

Product warranty card

Warranty Regulations

1.When purchasing this product, please read the following warranty terms carefully to ensure that the product has a valid warranty.

a. This warranty card is required for the warranty of headphones.

b. The product warranty period is one year, during the warranty period, if the product has non-human quality problems, the company will provide free repair and replacement after verification.

c. The warranty card is not allowed to be altered or forged.

2.If the product is damaged and cannot be used normally due to the following reasons, it will be beyond the warranty scope.

a.Product damaged caused by not following the instructions.

b.All damage caused by man-made, accidental and natural disasters.

c.Product damage caused by maintenance, modification, disassembly and other reasons not approved by our company.

d.The headphone shell appears aging, damage, scratches and other phenomena.

3.After the warranty period expires, users can still get the maintenance service of our company and only need to pay the corresponding maintenance fee.

4.Our company reserves the right to modify and interpret the contents of the warranty card.

User info

User name _____

ID _____

Product model _____

Purchase date _____

Phone number _____

Contact address _____

Agency _____

For any problems with the product, please contact our company promptly.
Thanks for buying our product, wish you a happy life!