Prüfbericht-Nr.: *Test report no.:*	**60440570-001**	**Auftrags-Nr.:** *Order no.:*	23870506 030	Seite 1 von 21 *Page 1 of 21*
Kunden-Referenz-Nr.: *Client reference no.:*	-	**Auftragsdatum:** *Order date:*	2021.02.10	
Auftraggeber: *Client:*	Brainlit AB			
Prüfgegenstand: *Test item:*	Alven Global			
Bezeichnung / Typ-Nr.: *Identification / Type no.:*	Contains FCC ID: VPYLBEE5HY1MW			
Auftrags-Inhalt: *Order content:*	Accredited testing			
Prüfgrundlage: *Test specification:*	FCC 47 CFR Part 15B with parts 15.107 & 15.109 ANSI C63.4: 2014			
Wareneingangsdatum: *Date of sample receipt:*	2021.02.10			
Prüfmuster-Nr.: *Test sample no:*	A003001961-001			
Prüfzeitraum: *Testing period:*	2021.04.08 – 2021.04.14			
Ort der Prüfung: *Place of testing:*	Lund, Sweden			
Prüflaboratorium: *Testing laboratory:*	TÜV Rheinland Sweden			
Prüfergebnis*: *Test result*:*	Pass			
überprüft von: reviewed by:	X Signed by: Sam Ebadeh	**genehmigt von:** authorized by:	X Signed by: Per Isacsson	
Datum: 2021.05.20 *Date:*		**Datum: 2021.05.20** *Date:*		
Stellung / *Position:*	Technical Expert	**Stellung** / *Position:*	Manager Director	
Sonstiges / *Other:*	The device incorporates one pre-certified module see chapter 2.1 for details			
Zustand des Prüfgegenstandes bei Anlieferung: *Condition of the test item at delivery:*	Prüfmuster vollständig und unbeschädigt *Test item complete and undamaged*			

* Legende:	1 = sehr gut	2 = gut	3 = befriedigend	4 = ausreichend	5 = mangelhaft
	P(ass) = entspricht o.g. Prüfgrundlage(n)		F(ail) = entspricht nicht o.g. Prüfgrundlage(n)	N/A = nicht anwendbar	N/T = nicht getestet
** Legend:*	*1 = very good*	*2 = good*	*3 = satisfactory*	*4 = sufficient*	*5 = poor*
	P(ass) = passed a.m. test specification(s)		*F(ail) = failed a.m. test specification(s)*	*N/A = not applicable*	*N/T = not tested*

Dieser Prüfbericht bezieht sich nur auf das o.g. Prüfmuster und darf ohne Genehmigung der Prüfstelle nicht auszugsweise vervielfältigt werden. Dieser Bericht berechtigt nicht zur Verwendung eines Prüfzeichens.
This test report only relates to the a. m. test sample. Without permission of the test center this test report is not permitted to be duplicated in extracts.

V05

Revision History60440570-00160440570-001

REVISION	DATE	REMARKS	AUTHOR
001	2021.05.20	First release	Sam Ebadeh
Note: Latest revision report will replace all previous reports			
This report based on FCC Part 15B no JBP Template version 1.2			

Summary of Test Results

FCC 47 CFR Rule Part	Test Description	Applicability	Report Section	RESULT	REMARKS
15.107	AC Power Line Conducted Emissions (Unintentional Radiators)	YES	4.1	PASS	
15.109	Radiated Emissions (Unintentional Radiators)	YES	4.2	PASS	

Possible test case verdicts:

- Test case does not apply to the test object: N/A
- Test object complies with the requirement: PASS or COMPLIANT
- Test object does not meet the requirement: FAIL or NOT COMPLIANT
- Test case not performed on the test object: N.P.

Table of Contents

1. GENERAL INFORMATION 4
1.1 Test Site 4
1.2 Client Information 4
2. PRODUCT INFORMATION 5
2.1 General Description 5
2.2 Device Characteristics 5
2.3 Test Samples 5
2.4 Wireless Technologies and Bands Supported by the EUT 5
2.5 Antenna Information 6
2.6 Wireless Technology Details 6
2.7 Ancillary Equipment 6
2.8 EUT Diagrams 6
3. TEST METHODS 7
3.1 Test Standards 7
3.2 Additional references 7
3.3 Limits 8
3.4 Description of Test Methods and Equipment Setup 9
3.5 EUT Configuration During Test 12
3.6 EUT Operation Modes 12
3.7 Deviations from the Test Standard 12
3.8 Environmental Conditions 13
4. TEST RESULTS 14
4.1 Test Results – AC Power Line Conducted Emissions (Unintentional Trans.) 14
4.2 Test Results – Radiated Emissions (Unintentional Transmitter) 16
5. TEST EQUIPMENT STATUS 19
5.1 List of Hardware with Calibration Dates 19
5.2 Software / Firmware Versions 20
6. MEASUREMENT UNCERTAINTY 20
6.1 Measurement Uncertainty for Conducted Emissions 20
6.2 Measurement Uncertainty for SAC 5 (Radiated Emissions & Band Edge) 20
7. PHOTOGRAPHS 21

1. GENERAL INFORMATION

1.1 Test Site

Test Facility:	**TÜV Rheinland Sweden AB**
Address:	**Mobilvägen 10**
	223 62 Lund
	Sweden
Swedac Registration Number: **FCC Test Firm Registration Number:** **ISED Test Site Registration Number:**	**10325** **517458** **24753**

1.2 Client Information

Company Name:	**Brainlit AB**
Address:	**Scheelevägen 34**
	223 63 Lund
	Sweden
Contact Person:	**Johan Frogner**
Contact e-Mail / Telephone	**Johan.frogner@brainlit.com / +46 (0) 708 300 439**

2. PRODUCT INFORMATION

2.1 General Description

Model name:	Alven Global
Manufacturer:	Brainlit AB
Model number / Marketing name:	Alven Global / 100023
FCC ID:	N/A (Contains approved module with FCC ID: VPYLBEE5HY1MW)
Description:	Free Standing LED Luminaire
Ancillary Equipment:	See section 2.7

The device incorporates one pre-certified module:

• Murata LBEE5HY1MW (FCC ID: VPYLBEE5HY1MW) for WLAN 2.4 GHz 802.11 b/g/n, WLAN 5GHz 802.11 a/n/ac and Bluetooth Low Energy

2.2 Device Characteristics

Device Class for 47 CFR Part 15 B	Class B
Type of Power Supply	AC
Nominal Supply Voltage	115 VAC
Supply Voltage Range	110 – 240 VAC
Operating Temperature Range	0°-30° C
Operating Air Humidity Range	IP 20 Class, Normal Ambient temperature
Highest Internal Frequency Source	2483 MHz

2.3 Test Samples

EUT #	EUT ID	Description	Used For:
1	A003001961-001	Standard test sample	Radiated Emissions Conducted Emissions

2.4 Wireless Technologies and Bands Supported by the EUT

Technology	Band	Frequency Range (Tx)	Evaluation Performed*
Bluetooth LE (LBEE5HY1MW)	2.4 GHz	2402 MHz - 2480 MHz	NO
WiFi 802.11b/g/n (LBEE5HY1MW)	2.4 GHz	2412 MHz – 2473 MHz	NO

2.5 Antenna Information

Technology	Band	Number of Antennas	Antenna Type(s)	Gain
Bluetooth LE (LBEE5HY1MW)	2.4 GHz	1	PCB Antenna	0.1 dBi
WiFi 802.11b/g/n (LBEE5HY1MW)	2.4 GHz	1	PCB Antenna	0.1 dBi

2.6 Wireless Technology Details

Technology	Band	Modulation Type(s)	No. of Channels	Channel Spacing	Adaptivity
Bluetooth LE (LBEE5HY1MW)	2.4 GHz	GFSK	40	2 MHz	N/A
WiFi 802.11b/g/n (LBEE5HY1MW)	2.4 GHz	CCK / BPSK / QPSK / 64-QAM	11	5.5 MHz	N/A

2.7 Ancillary Equipment

No ancillary equipment.

2.8 EUT Diagrams

N/A

3. TEST METHODS

3.1 Test Standards

Testing was performed according to the following standards / references

Standard	Version	Description
FCC 47 CFR 15.107	-	Conducted limits
FCC 47 CFR 15.109	-	Radiated emission limits

3.2 Additional references

The following standards / references were also considered for the testing

Standard	Version	Description
ANSI C63.4	2014	American National Standard for Methods of Measurement of Radio-Noise Emissions from Low-Voltage Electrical and Electronic Equipment in the Range of 9 kHz to 40 GHz

3.3 Limits

FCC 47 CFR Rule Part	Test Description	Limit Reference (FCC 47 CFR Reference)
15.107	AC Power Line Conducted Emissions (Unintentional Radiators)	15.107 §(a) for Class B Devices§
15.109	Radiated Emissions (Unintentional Radiators)	15.109 §(a) for Class B Devices§ *See Note 1

Interpretation of the measurement results has been performed in accordance with ANSI C63.4 section 10.2.8.2

Compliance with the requirements has been based on the results of the measurements compared to the specified limits, not taking into account measurement instrumentation uncertainty.

Measurement Uncertainty figures are stated in section 6

Note 1

Radiated Emissions limits in the tables from 47 CFR sections 15.109 are presented in µV/m. Measurements on the test system are made in dBµV/m. To convert between these, the following adjustment is used:

$New\ Limit = 20\log\left(\frac{Original\ Limit}{10^6}\right)$+120

Example: from 15.209(a) the limit for 30MHz – 88MHz is 100µV/m at 3m. This gives:

$New\ Limit = 20\log\left(\frac{100}{10^6}\right)$+120 = 40dBµV/m at 3m

Additionally, in some cases testing has been performed at distances other than those specified in the tables. When this has occurred, the limits have been adjusted in accordance with the requirements in 47 CFR 15.31, using an extrapolation factor of 40dB/decade at frequencies below 30MHz and 20dB/decade at or above 30MHz

Example: from 15.209(a) the limit for 1.705MHz – 30MHz is 30µV/m (=29.54 dBµV/m) at 30m

$Limit@3m = Limit@30m + 40\log\left(\frac{30}{3}\right)$ = 29.54 +40.00 = 69.54 dBµV/m at 3m

Example: from 15.209(a) the limit for 1GHz – 18GHz is 500µV/m (=53.98 dBµV/m) at 3m

$Limit@1m = Limit@3m + 20\log\left(\frac{3}{1}\right)$ = 53.98 +9.54 = 63.52 dBµV/m at 1m

3.4 Description of Test Methods and Equipment Setup

3.4.1 General Description

Testing was performed in accordance with the various requirements of ANSI C63.4 and ANSI C63.10. Any deviations from the test methods are described in section 3.7

Where different arrangements of equipment were used for different types of measurements, these are tabulated in section 3.4.2 and details of each arrangement are included in subsequent sections

3.4.2 Test Equipment Setup Used by Test Type

FCC 47 CFR Rule Part	Test Description	Test Equipment Used
15.107	AC Power Line Conducted Emissions (Unintentional Radiators)	Conducted Emissions
15.109	Radiated Emissions (Unintentional Radiators)	SAC5

3.4.3 Test Equipment Setup – Conducted Emissions

- The EUT was placed 0.4 meters from the conducting wall of the shielded room with EUT being connected to the power mains through a line impedance stabilization network (LISN). Other support units were connected to the power mains through another LISN. The LISNs provide 50Ω/ 50µH of coupling impedance for the measuring instrument.

- The lines of the power mains connected to the EUT were checked for maximum conducted interference.

- The frequency range from 150 kHz to 30 MHz was searched. Emission levels over 10 dB under the prescribed limits could not be reported.

3.4.4 Test Equipment Setup – SAC 5 (Radiated Emissions)

- For frequency range 30MHz-1GHz Log-Periodic Antenna was used. Antenna elevated from 100 cm from floor to 400 cm from floor, and was placed at 3 m from center of turntable in tilted position. The equipment under test (EUT) was placed at the middle of the turntable at 150 cm height from floor. The antenna rotated to repeat the measurements for both the horizontal and vertical antenna polarizations. Repeat the measurement steps until the maximum emissions were obtained.

- For frequency range 1GHz-18GHz horn Antenna was used. Antenna elevated from 100 cm from floor to 200 cm from floor, and was placed at 3 m from center of turntable. The equipment under test (EUT) was placed at the middle of the turntable at 150 cm height from floor. The antenna rotated to repeat the measurements for both the horizontal and vertical antenna polarizations. Repeat the measurement steps until the maximum emissions were obtained.

- For frequency range 18GHz-40GHz double horn Antenna was used. Antenna's height was adjusted to150 cm from floor, and 1 m distance to center of turntable. The equipment under test (EUT) was placed at the middle of the turntable on at 150 cm height from floor.

- For all frequency ranges the turntable was rotated 360˚ for obtaining the maximum emission.

SAC 5 Test Setup Configuration 30MHz – 1GHz

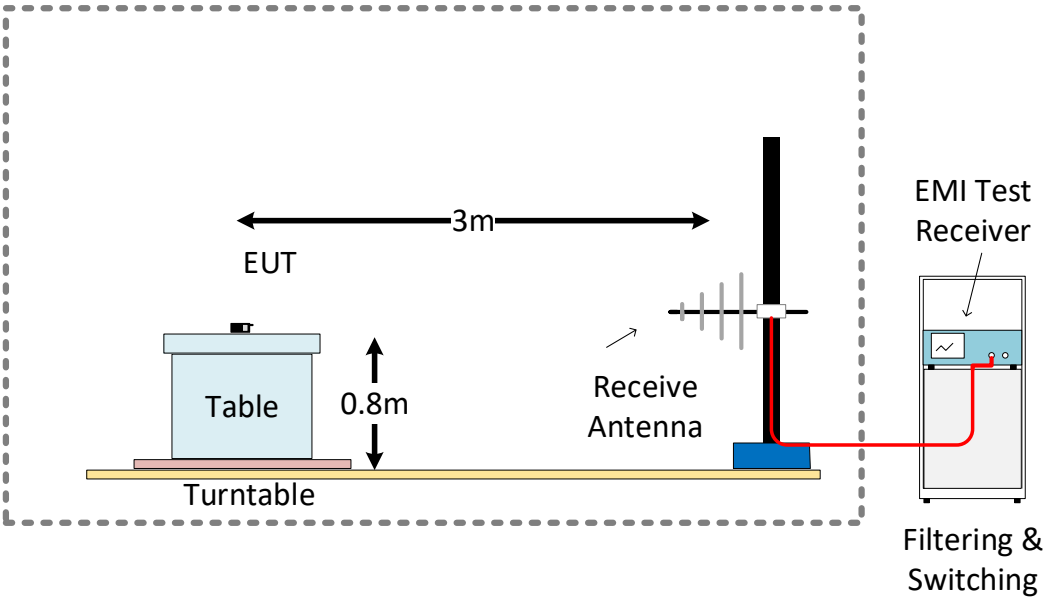

SAC 5 Test Setup Configuration 1GHz – 18GHz

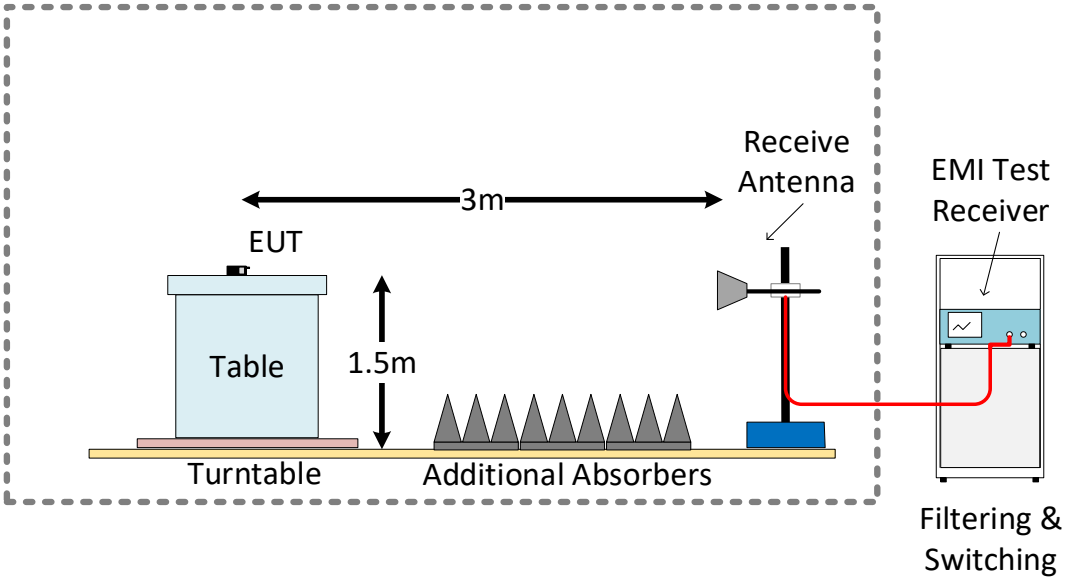

SAC 5 Test Setup Configuration 18GHz – 40GHz

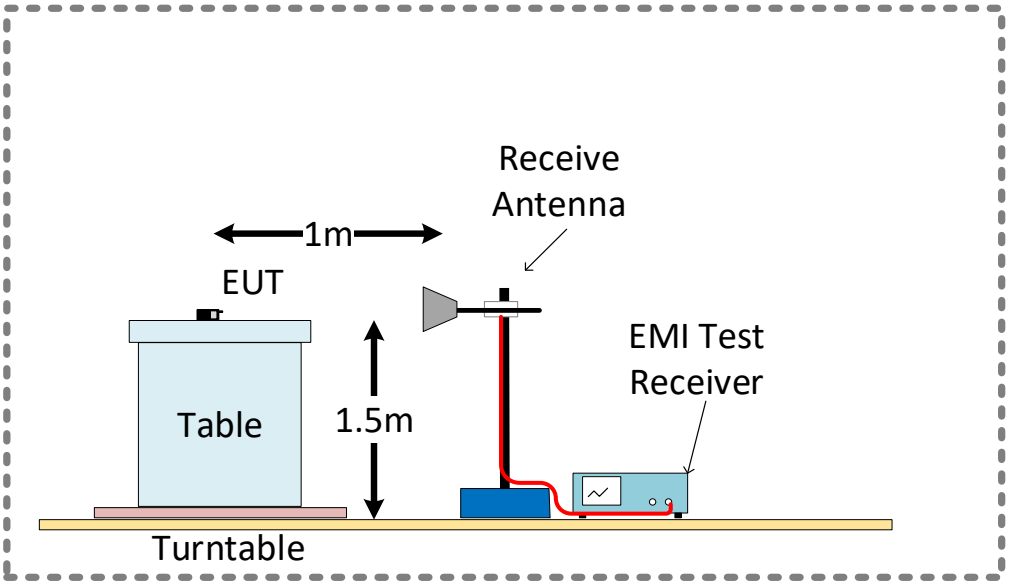

3.5 EUT Configuration During Test

Operation mode	Description
Default	The device was set with the light output at its maximum level

3.6 EUT Operation Modes

Operation mode	Description
Maximum Light Level	The device was set with the light output at its maximum level

3.7 Deviations from the Test Standard

No deviations from the test standard was made.

3.8 Environmental Conditions

3.8.1 Environmental Conditions – SAC5 (Radiated Emissions)

Environmental Conditions Log – SAC5

Date	Time	Temperature (°C)	Relative Humidity (%)
2021.04.08	09:44	18.3	33

4. TEST RESULTS

4.1 Test Results – AC Power Line Conducted Emissions (Unintentional Trans.)

4.1.1 AC Power Line Conducted Emissions (Unintentional) – Test Summary

Test Specification	FCC 47 CFR 15.107 (Part 15 Subpart B)	
Test Engineer & Date	Niall Forrester	2021.04.14
EUT and Ancillary Equipment IDs	A003001961-001	None
EUT Operation Mode(s)	Maximum Light Level	
EUT Wireless Configuration(s)	Idle mode	
EUT Hardware Configuration(s)	Default	
Overall Result	PASS	

Test Parameter	Frequency Range	Result*
AC Power Line Emissions - Idle Mode	150 kHz – 30 MHz	PASS

* For detailed measurements, see tables and graphs in sections below

4.1.2 AC Power Line Conducted Emissions (Unintentional) – Test Details

Test mode condition	Conducted Emissions	
Sweep frequency	150 kHz – 30 MHz	
Standard	FCC 47 Part 15.107 Class B	
EUT	A002965790-001	
Ancillary Equipment	None	
Test Engineer	Niall Forrester	Date: 2021.04.14

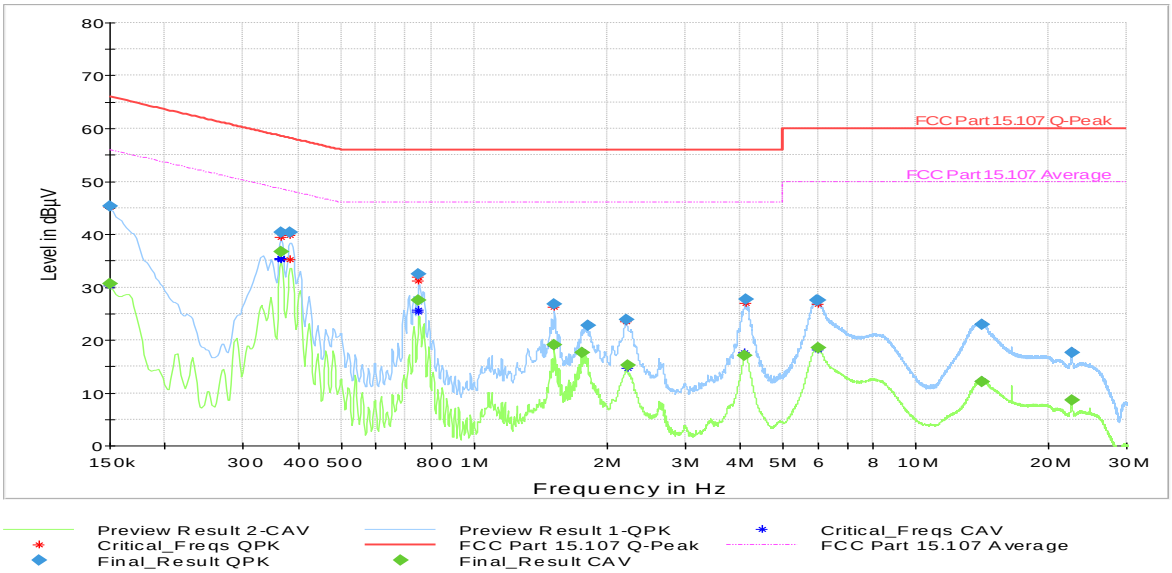

Frequency (MHz)	QuasiPeak (dBµV/m)	CAverage (dBµV/m)	Limit (dBµV/m)	Margin (dB)	Meas. Time	Bandwidth (kHz)	Height (cm)	Pol	Azimuth (deg)
0.150000	---	30.63	56.00	25.37	1000.0	9.000	L1	ON	9.7
0.150000	45.28	---	66.00	20.72	1000.0	9.000	L1	ON	9.7
0.366000	40.33	---	58.59	18.27	1000.0	9.000	N	ON	9.6
0.366000	---	36.72	48.59	11.87	1000.0	9.000	N	ON	9.6
0.384000	40.39	---	58.19	17.80	1000.0	9.000	N	ON	9.6
0.750750	32.55	---	56.00	23.45	1000.0	9.000	N	ON	9.6
0.750750	---	27.50	46.00	18.50	1000.0	9.000	N	ON	9.6
1.520250	26.87	---	56.00	29.13	1000.0	9.000	N	ON	9.7
1.520250	---	19.12	46.00	26.88	1000.0	9.000	N	ON	9.7
1.752000	---	17.71	46.00	28.29	1000.0	9.000	L1	ON	9.7
1.808250	22.80	---	56.00	33.20	1000.0	9.000	N	ON	9.7
2.208750	23.87	---	56.00	32.13	1000.0	9.000	N	ON	9.7
2.231250	---	15.21	46.00	30.79	1000.0	9.000	N	ON	9.7
4.101000	---	17.15	46.00	28.85	1000.0	9.000	L1	ON	9.8
4.114500	27.77	---	56.00	28.23	1000.0	9.000	L1	ON	9.8
5.964000	27.54	---	60.00	32.46	1000.0	9.000	N	ON	9.8
6.006750	---	18.52	50.00	31.48	1000.0	9.000	N	ON	9.8
6.020250	27.48	---	60.00	32.52	1000.0	9.000	N	ON	9.8
14.086500	23.02	---	60.00	36.98	1000.0	9.000	L1	ON	9.9
14.167500	---	12.18	50.00	37.82	1000.0	9.000	L1	ON	9.9
22.501500	17.62	---	60.00	42.38	1000.0	9.000	L1	ON	10.0
22.521750	---	8.70	50.00	41.30	1000.0	9.000	L1	ON	10.0

4.2 Test Results – Radiated Emissions (Unintentional Transmitter)

4.2.1 Radiated Emissions (Unintentional) – Test Summary

Test Specification	FCC 47 CFR 15.109 (Part 15 Subpart B)	
Test Engineer & Date	Niall Forrester	2021.04.08
EUT and Ancillary Equipment IDs	A003001961-001	-
EUT Operation Mode(s)	Maximum Light Level	
EUT Wireless Configuration(s)	Idle Mode	
EUT Hardware Configuration(s)	Default	
Overall Result	PASS	

Test Parameter	Frequency Range	Result*
Radiated Emissions - Idle Mode	30 MHz – 1 GHz	PASS
Radiated Emissions - Idle Mode	1 GHz – 18 GHz	PASS

* For detailed measurements, see tables and graphs in sections below

4.2.2 Radiated Emissions (Unintentional) – Test Details

30MHz – 1GHz

Test mode condition	Radiated Emissions	
Antenna orientation	Horizontal and Vertical	
Sweep frequency	30 MHz – 1 GHz	
Standard	FCC 47 Part 15.109	
EUT	A003001961-001	
Ancillary Equipment	-	
Test Engineer	Niall Forrester	Date: 2021-04-08
Chamber details	Chamber: SAC 5	

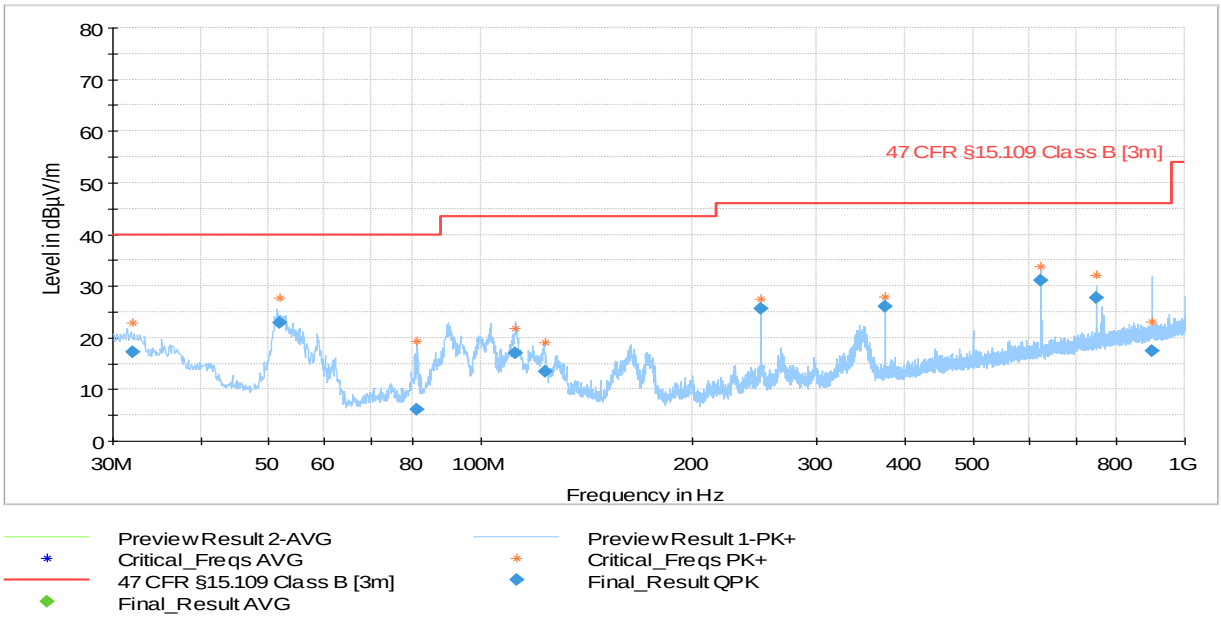

Frequency (MHz)	QuasiPeak (dBµV/m)	Limit (dBµV/m)	Margin (dB)	Meas. Time (ms)	Bandwidth (kHz)	Height (cm)	Pol	Azimuth (deg)
32.014680	17.15	40.00	22.85	1000.0	120.000	183.0	V	338.0
51.835280	22.94	40.00	17.06	1000.0	120.000	100.0	V	162.0
81.196560	6.06	40.00	33.94	1000.0	120.000	325.0	V	252.0
112.192920	17.04	43.52	26.49	1000.0	120.000	175.0	V	87.0
123.254120	13.50	43.52	30.02	1000.0	120.000	183.0	V	64.0
249.989640	25.65	46.02	20.37	1000.0	120.000	370.0	V	72.0
375.004720	26.02	46.02	20.00	1000.0	120.000	325.0	V	202.0
624.977840	31.09	46.02	14.93	1000.0	120.000	108.0	V	310.0
750.020200	27.75	46.02	18.27	1000.0	120.000	183.0	V	177.0
898.982640	17.41	46.02	28.61	1000.0	120.000	320.0	H	101.0

1GHz – 18GHz

Test mode condition	Radiated Emissions	
Antenna orientation	Horizontal and Vertical	
Sweep frequency	1 GHz – 18 GHz	
Standard	FCC 47 Part 15.109	
EUT	A003001961-001	
Ancillary Equipment	-	
Test Engineer	Niall Forrester	Date: 2021-04-08
Chamber details	Chamber: SAC 5	

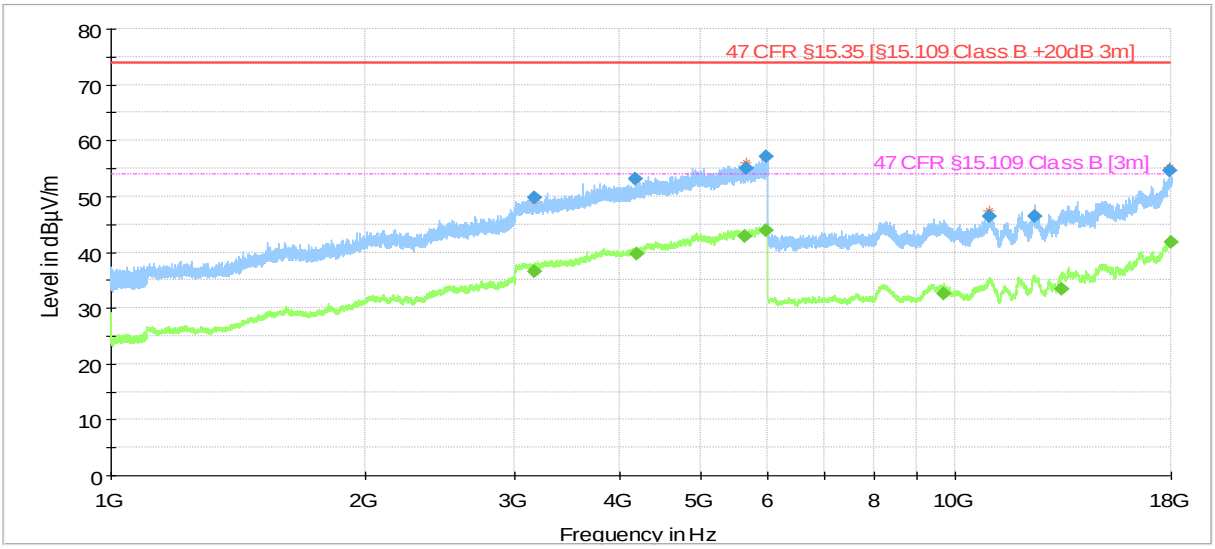

Frequency (MHz)	MaxPeak (dBµV/m)	Average (dBµV/m)	Limit (dBµV/m)	Margin (dB)	Meas. Time (ms)	Bandwidth (kHz)	Height (cm)	Pol	Azimuth (deg)
3167.305000	49.79	---	73.98	24.19	1000.0	1000.000	108.0	H	86.0
3175.049000	---	36.60	53.98	17.38	1000.0	1000.000	285.0	V	-4.0
4180.072000	53.15	---	73.98	20.83	1000.0	1000.000	193.0	V	42.0
4195.849000	---	39.60	53.98	14.38	1000.0	1000.000	365.0	H	82.0
5635.022000	---	42.74	53.98	11.24	1000.0	1000.000	235.0	H	188.0
5648.464000	55.12	---	73.98	18.86	1000.0	1000.000	215.0	H	312.0
5974.353000	57.03	---	73.98	16.95	1000.0	1000.000	365.0	H	86.0
5977.905000	---	43.99	53.98	9.99	1000.0	1000.000	385.0	H	52.0
9675.923000	---	32.47	53.98	21.51	1000.0	1000.000	108.0	V	42.0
10977.523000	46.34	---	73.98	27.64	1000.0	1000.000	215.0	V	96.0
12410.961000	46.44	---	73.98	27.54	1000.0	1000.000	100.0	H	186.0
13335.542000	---	33.43	53.98	20.55	1000.0	1000.000	100.0	V	38.0
17961.724000	54.54	---	73.98	19.44	1000.0	1000.000	243.0	V	218.0
17981.635000	---	41.86	53.98	12.12	1000.0	1000.000	185.0	V	42.0

5. TEST EQUIPMENT STATUS

5.1 List of Hardware with Calibration Dates

5.1.1 Hardware List – Conducted Emissions System

Type	Manufacturer	Model	Serial Number / ID	Calibration Date	Calibration Due
Two-Line V-network	Rohde & Schwarz	ENV216	101090 2704076	2020.07.16	2021.07.16
Test Receiver 9KHz to 3.5 GHz	Rohde & Schwarz	ESR3	101674 2704016	2020.07.17	2021.07.17
RF PROBE	Fischer Custom Communication	F-52	22 2902256	2019.04.09	2021.04.09
Humidity Temperature Probe	Lufft	OPUS 20	113.0118.0802.033 2771025	2020.07.31	2022.07.31

5.1.2 Hardware List – SAC5 System

Type	Manufacturer	Model	Serial Number / ID	Calibration Date	Calibration Due
EMI Test Receiver	Rohde & Schwarz	ESW44	101760 2881044	2020.07.17	2021.07.17
Ultra Broadband Antenna	Rohde & Schwarz	HL562E	100988 2823181	2019.07.23	2021.07.23
Double Ridged Waveguide Horn Antenna	Rohde & Schwarz	HF907	102678 2823164	2019.07.15	2021.07.15
Control Device	Maturo	NCD	NCD/393/2372.01	N/A	N/A
Open Switch & Control Unit	Rohde & Schwarz	OSP150	100081 2884198	2020.08.04	2021.08.04
Open Switch & Control Unit	Rohde & Schwarz	OSP120	100084 2761253	2020.08.04	2021.08.04
Shielded Filter Unit	Rohde & Schwarz	OSP-F Extension 1	101333 2761265	2020.08.04	2021.08.04
Shielded Filter Unit	Rohde & Schwarz	OSP-F Extension 2	101335 2761266	2020.08.04	2021.08.04
Shielded Filter Unit	Rohde & Schwarz	OSP-F Base Unit	101330 2761262	2020.08.04	2021.08.04
Humidity Temperature Probe	Lufft	OPUS 20	126.0118.0802.033 2771042	2020.07.31	2022.07.31

5.2 Software / Firmware Versions

Equipment	Software / Firmware Name	Version
Conducted Emissions System	EMC 32	V10.60.10
SAC 5	EMC 32	V10.60.10

6. MEASUREMENT UNCERTAINTY

6.1 Measurement Uncertainty for Conducted Emissions

Parameter	Uncertainty (Coverage Factor k=2)
Conducted emissions with LISN 150KHz to 30 MHz	2.98 dB

6.2 Measurement Uncertainty for SAC 5 (Radiated Emissions & Band Edge)

Parameter	Uncertainty (Coverage Factor k=2)
Field Strength 10 Hz -9 kHz	3.38 dB
Field Strength 9 kHz -30 MHz	3.38 dB
Field Strength 30 MHz -1000 MHz	3.38 dB
Field Strength 1 GHz -18 GHz	4.88 dB
Field Strength 18 GHz - 40 GHz	5.14 dB

7. PHOTOGRAPHS

See Appendix 1 for photographs