Prüfbericht-Nr.: *Test report no.:*	**60440571-001**	**Auftrags-Nr.:** *Order no.:*	23870506 030	Seite 1 von 28 *Page 1 of 28*
Kunden-Referenz-Nr.: *Client reference no.:*	-	**Auftragsdatum:** *Order date:*	2021.02.10	
Auftraggeber: *Client:*	Brainlit AB			
Prüfgegenstand: *Test item:*	Alven Global			
Bezeichnung / Typ-Nr.: *Identification / Type no.:*	Contains FCC ID: VPYLBEE5HY1MW			
Auftrags-Inhalt: *Order content:*	Accredited testing			
Prüfgrundlage: *Test specification:*	FCC 47 CFR Part 15.247 with parts 15.207 & 15.209 ANSI C63.10: 2013			
Wareneingangsdatum: *Date of sample receipt:*	2021.02.10			
Prüfmuster-Nr.: *Test sample no:*	A003001961-001			
Prüfzeitraum: *Testing period:*	2021.04.09 – 2021.04.14			
Ort der Prüfung: *Place of testing:*	Lund, Sweden			
Prüflaboratorium: *Testing laboratory:*	TÜV Rheinland Sweden			
Prüfergebnis*: *Test result*:*	Pass			
überprüft von: reviewed by:	X Signed by: SamEbadeh	**genehmigt von:** authorized by:	X Signed by: Per Isacsson	
Datum: 2021.05.20 *Date:*		**Datum: 2021.05.20** *Date:*		
Stellung / *Position:*	Technical Expert	**Stellung** / *Position:*	Manager Director	
Sonstiges / *Other:*	The device incorporates one pre-certified module see chapter 2.1 for details			
Zustand des Prüfgegenstandes bei Anlieferung: *Condition of the test item at delivery:*	Prüfmuster vollständig und unbeschädigt *Test item complete and undamaged*			

* Legende:	1 = sehr gut	2 = gut	3 = befriedigend	4 = ausreichend	5 = mangelhaft
	P(ass) = entspricht o.g. Prüfgrundlage(n)		F(ail) = entspricht nicht o.g. Prüfgrundlage(n)	N/A = nicht anwendbar	N/T = nicht getestet
** Legend:*	*1 = very good*	*2 = good*	*3 = satisfactory*	*4 = sufficient*	*5 = poor*
	P(ass) = passed a.m. test specification(s)		*F(ail) = failed a.m. test specification(s)*	*N/A = not applicable*	*N/T = not tested*

Dieser Prüfbericht bezieht sich nur auf das o.g. Prüfmuster und darf ohne Genehmigung der Prüfstelle nicht auszugsweise vervielfältigt werden. Dieser Bericht berechtigt nicht zur Verwendung eines Prüfzeichens.
This test report only relates to the a. m. test sample. Without permission of the test center this test report is not permitted to be duplicated in extracts.

V05

Revision History60440571-00160440571-001

REVISION	DATE	REMARKS	AUTHOR
001	2021.05.20	First release	Sam Ebadeh
Note: Latest revision report will replace all previous reports			
This report based on FCC Part 15.247 Template version 1.2			

Summary of Test Results

FCC 47 CFR Rule Part	Test Description	Applicability	Report Section	RESULT	REMARKS
15.207	AC Power Line Conducted Emissions (Intentional Radiators)	YES	4.1	PASS	
15.209	Radiated Emissions (Intentional Radiators)	YES	4.2	PASS	
15.247 (d)	Out of Band Emissions	YES	4.3	N.P.	See Note 1
15.247 (d)	Band Edge Compliance (Authorized Band)	YES	4.4	N.P.	See Note 1
15.247 (d)	Band Edge Compliance (Restricted Band)	YES	4.5	PASS	
15.247 (a)(1)	20dB Bandwidth	YES	4.6	N.P.	See Note 1
15.247 (a)(1)	Carrier (Hopping Channel) Separation	NO	4.7	N.P.	Non-hopping device
15.247 (a)(1)	Number of Hopping Channels	NO	4.8	N.P.	Non-hopping device
15.247 (a)(1)	Time of Occupancy (Dwell Time)	NO	4.9	N.P.	Non-hopping device
15.247 (a)(2)	6dB Bandwidth	YES	4.10	N.P.	See Note 1
15.247 (b)	Peak Conducted Output Power	YES	4.11	N.P.	See Note 1
15.247 (e)	Power Spectral Density	YES	4.12	N.P.	See Note 1

Possible test case verdicts:

- Test case does not apply to the test object: N/A
- Test object complies with the requirement: PASS or COMPLIANT
- Test object does not meet the requirement: FAIL or NOT COMPLIANT
- Test case not performed on the test object: N.P.

Note 1: the device includes pre-certified modules as described in section 2.1 below

Table of Contents

1. GENERAL INFORMATION 4
1.1 Test Site 4
1.2 Client Information 4
2. PRODUCT INFORMATION 5
2.1 General Description 5
2.2 Device Characteristics 5
2.3 Test Samples 5
2.4 Wireless Technologies and Bands Supported by the EUT 6
2.5 Antenna Information 6
2.6 Wireless Technology Details 6
2.7 Ancillary Equipment 6
2.8 EUT Diagrams 6
3. TEST METHODS 7
3.1 Test Standards 7
3.2 Additional references 7
3.3 Limits 8
3.4 Description of Test Methods and Equipment Setup 9
3.5 EUT Configuration During Test 14
3.6 EUT Operation Modes 14
3.7 Deviations from the Test Standard 14
3.8 Environmental Conditions 14
4. TEST RESULTS 15
4.1 Test Results – AC Power Line Conducted Emissions (Intentional Transmitter) 15
4.2 Test Results – Radiated Emissions (Intentional Transmitter) 17
4.3 Test Results – Out of Band Emissions 21
4.4 Test Results – Band Edge Compliance (Authorized Band) 21
4.5 Test Results – Band Edge Compliance (Restricted Band) 21
4.6 Test Results – 20dB Bandwidth 24
4.7 Test Results – Carrier (Hopping Channel) Separation 24
4.8 Test Results – Number of Hopping Channels 24
4.9 Test Results – Time of Occupancy (Dwell Time) 24
4.10 Test Results – 6dB Bandwidth 24
4.11 Test Results – Peak Conducted Output Power 24
4.12 Test Results – Power Spectral Density 24
5. TEST EQUIPMENT STATUS 25
5.1 List of Hardware with Calibration Dates 25
5.2 Software / Firmware Versions 26
6. MEASUREMENT UNCERTAINTY 27
6.1 Measurement Uncertainty for CTE 27
6.2 Measurement Uncertainty for Conducted Emissions 27
6.3 Measurement Uncertainty for SAC 5 (Radiated Emissions & Band Edge) 27
7. PHOTOGRAPHS 28
7.1 Photographs of the EUT 28

1. GENERAL INFORMATION

1.1 Test Site

Test Facility:	**TÜV Rheinland Sweden AB**
Address:	**Mobilvägen 10**
	223 62 Lund
	Sweden
Swedac Registration Number: **FCC Test Firm Registration Number:** **ISED Test Site Registration Number:**	**10325** **517458** **24753**

1.2 Client Information

Company Name:	**Brainlit AB**
Address:	**Scheelevägen 34**
	223 63 Lund
	Sweden
Contact Person:	**Johan Frogner**
Contact e-Mail / Telephone	**Johan.frogner@brainlit.com / +46 (0) 708 300 439**

2. PRODUCT INFORMATION

2.1 General Description

Model name:	Alven Global
Manufacturer:	Brainlit AB
Model number / Marketing name:	Alven Global / 100023
FCC ID:	N/A (Contains approved module with FCC ID: VPYLBEE5HY1MW)
Description:	Free Standing LED Luminaire
Ancillary Equipment:	See section 2.7

The device incorporates one pre-certified module:

- Murata LBEE5HY1MW (FCC ID: VPYLBEE5HY1MW) for WLAN 2.4 GHz 802.11 b/g/n, WLAN 5GHz 802.11 a/n/ac and Bluetooth Low Energy

2.2 Device Characteristics

Type of Power Supply	AC
Nominal Supply Voltage	115 VAC
Supply Voltage Range	110 – 240 VAC
Operating Temperature Range	0°-30° C
Operating Air Humidity Range	IP 20 Class, Normal Ambient temperature
Highest Internal Frequency Source	2480 MHz

2.3 Test Samples

EUT #	EUT ID	Description	Used For:
1	A003001961-001	Standard test sample	Radiated Emissions Conducted Emissions

2.4 Wireless Technologies and Bands Supported by the EUT

Technology	Band	Frequency Range (Tx)	Evaluation Performed*
Bluetooth LE (LBEE5HY1MW)	2.4 GHz	2402 MHz – 2480 MHz	YES
WiFi 802.11b/g/n (LBEE5HY1MW)	2.4 GHz	2412 MHz – 2473 MHz	NO

*This statement refers only to this report. Other wireless technologies may be covered by other reports.

2.5 Antenna Information

Technology	Band	Number of Antennas	Antenna Type(s)	Gain (dBi)
Bluetooth LE (LBEE5HY1MW)	2.4 GHz	1	PCB Antenna	0.1
WiFi 802.11b (LBEE5HY1MW)	2.4 GHz	1	PCB Antenna	0.1

2.6 Wireless Technology Details

Technology	Band	Rated Pwr (dBm)	Modulation Type(s)	No. of Channels	Channel Spacing	Adaptivity
Bluetooth LE (LBEE5HY1MW)	2.4 GHz	5.11	GFSK	40	2 MHz	N/A
WiFi 802.11b/g/n (LBEE5HY1MW)	2.4 GHz	23.83	CCK / BPSK / QPSK / 64-QAM	11	5.5 MHz	N/A

2.7 Ancillary Equipment

No ancillary equipment.

2.8 EUT Diagrams

N/A

3. TEST METHODS

3.1 Test Standards

Testing was performed according to the following standards / references

Standard	Version	Description
FCC 47 CFR 15.247	-	Operation within the bands 902-928 MHz, 2400-2483.5 MHz, and 5725-5850 MHz.
FCC 47 CFR 15.207	-	Conducted limits
FCC 47 CFR 15.209	-	Radiated emission limits; general requirements

3.2 Additional references

The following standards / references were also considered for the testing

Standard	Version	Description
ANSI C63.10	2013	American National Standard of Procedures for Compliance Testing of Unlicensed Wireless Devices

3.3 Limits

FCC 47 CFR Rule Part	Test Description	Limit Reference (FCC 47 CFR Reference)
15.207	AC Power Line Conducted Emissions (Intentional Radiators)	15.207 (a)
15.209	Radiated Emissions (Intentional Radiators)	15.209 (a) *See Note 1
15.247 (d)	Out of Band Emissions	15.247 (d)
15.247 (d)	Band Edge Compliance (Authorized Band)	15.247 (d)
15.247 (d)	Band Edge Compliance (Restricted Band)	15.247 (d)
15.247 (a)(1)	20dB Bandwidth	15.247 (a)(1)
15.247 (a)(1)	Carrier (Hopping Channel) Separation	15.247 (a)(1)
15.247 (a)(1)	Number of Hopping Channels	15.247 (a)(1)
15.247 (a)(1)	Time of Occupancy (Dwell Time)	15.247 (a)(1)
15.247 (a)(2)	6dB Bandwidth	15.247 (a)(2)
15.247 (b)	Peak Conducted Output Power	§15.247 (b)(1) [Hopping] §15.247 (b)(3) [Non-Hopping]
15.247 (e)	Power Spectral Density	15.247 (e)

Interpretation of the measurement results has been performed in accordance with ANSI C63.10 section 1.3

Compliance with the requirements has been based on the results of the measurements compared to the specified limits, not taking into account measurement instrumentation uncertainty.

Measurement Uncertainty figures are stated in section 6

Note 1

Radiated Emissions limits in the tables from 47 CFR sections 15.109 & 15.209 are presented in µV/m. Measurements on the test system are made in dBµV/m. To convert between these, the following adjustment is used:

$$New\ Limit = 20\log\left(\frac{Original\ Limit}{10^6}\right) + 120$$

Example: from 15.209(a) the limit for 30MHz – 88MHz is 100µV/m at 3m. This gives:

$$New\ Limit = 20\log\left(\frac{100}{10^6}\right) + 120 = 40\text{dBµV/m at 3m}$$

Additionally, in some cases testing has been performed at distances other than those specified in the tables. When this has occurred, the limits have been adjusted in accordance with the requirements in 47 CFR 15.31, using an extrapolation factor of 40dB/decade at frequencies below 30MHz and 20dB/decade at or above 30MHz

Example: from 15.209(a) the limit for 1.705MHz – 30MHz is 30µV/m (=29.54 dBµV/m) at 30m

$$Limit@3m = Limit@30m + 40\log\left(\frac{30}{3}\right) \qquad = 29.54 + 40.00 = 69.54\ \text{dBµV/m at 3m}$$

Example: from 15.209(a) the limit for 1GHz – 18GHz is 500µV/m (=53.98 dBµV/m) at 3m

$$Limit@1m = Limit@3m + 20\log\left(\frac{3}{1}\right) \qquad = 53.98 + 9.54 = 63.52\ \text{dBµV/m at 1m}$$

3.4 Description of Test Methods and Equipment Setup

3.4.1 General Description

Testing was performed in accordance with the various requirements of ANSI C63.4 and ANSI C63.10. Any deviations from the test methods are described in section 3.7

Where different arrangements of equipment were used for different types of measurements, these are tabulated in section 3.4.2 and details of each arrangement are included in subsequent sections

3.4.2 Test Equipment Setup Used by Test Type

FCC 47 CFR Rule Part	Test Description	Test Equipment Used
15.207	AC Power Line Conducted Emissions (Intentional Radiators)	Conducted Emissions
15.209	Radiated Emissions (Intentional Radiators)	SAC5
15.247 (d)	Out of Band Emissions	CTE
15.247 (d)	Band Edge Compliance (Authorized band)	CTE
15.247 (d)	Band Edge Compliance (Restricted band)	SAC 5
15.247 (a)(1)	20dB Bandwidth	CTE
15.247 (a)(1)	Carrier (Hopping Channel) Separation	CTE
15.247 (a)(1)	Number of Hopping Channels	CTE
15.247 (a)(1)	Time of Occupancy (Dwell Time)	CTE
15.247 (a)(2)	6dB Bandwidth	CTE
15.247 (b)	Peak Conducted Output Power	CTE
15.247 (e)	Power Spectral Density	CTE

3.4.3 Test Equipment Setup – CTE System

The Comprehensive Test Environment (CTE) system consists of a number of instruments (see section) mounted in a rack together with automated relays and interconnecting hardware. The instruments and other equipment are controlled from a standard PC running software provided by the manufacturer. The RF output of the EUT is connected to the test system via a coaxial cable.

Tests are in the form of pre-defined scripts that can be loaded on the PC. The scripts, as well as the hardware setup, have been verified for conformance with the relevant test specifications.

Losses in the cables and interconnects have been measured using the system's own automated routines and are compensated for automatically. Any additional loss in RF adapter cables supplied together with the EUT can be compensated for using the known characteristics of that adapter.

CTE Block Diagram

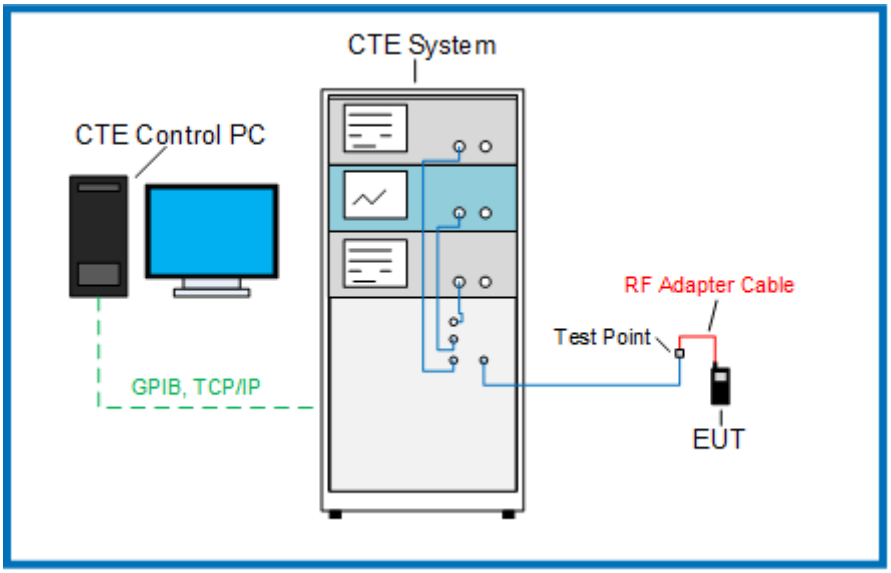

3.4.4 Test Equipment Setup – Conducted Emissions

- The EUT was placed 0.4 meters from the conducting wall of the shielded room with EUT being connected to the power mains through a line impedance stabilization network (LISN). Other support units were connected to the power mains through another LISN. The LISNs provide 50Ω/ 50µH of coupling impedance for the measuring instrument.

- The lines of the power mains connected to the EUT were checked for maximum conducted interference.

- The frequency range from 150 kHz to 30 MHz was searched. Emission levels over 10 dB under the prescribed limits could not be reported.

3.4.5 Test Equipment Setup – SAC 5 (Radiated Emissions and Restricted Band Edge)

- For frequency range 30MHz-1GHz Log-Periodic Antenna was used. Antenna elevated from 100 cm from floor to 400 cm from floor, and was placed at 3 m from center of turntable in tilted position. The equipment under test (EUT) was placed at the middle of the turntable at 150 cm height from floor. The antenna rotated to repeat the measurements for both the horizontal and vertical antenna polarizations. Repeat the measurement steps until the maximum emissions were obtained.

- For frequency range 1GHz-18GHz horn Antenna was used. Antenna elevated from 100 cm from floor to 200 cm from floor, and was placed at 3 m from center of turntable. The equipment under test (EUT) was placed at the middle of the turntable at 150 cm height from floor. The antenna rotated to repeat the measurements for both the horizontal and vertical antenna polarizations. Repeat the measurement steps until the maximum emissions were obtained.

- For frequency range 18GHz-40GHz double horn Antenna was used. Antenna's height was adjusted to150 cm from floor, and 1 m distance to center of turntable. The equipment under test (EUT) was placed at the middle of the turntable on at 150 cm height from floor.

- For all frequency ranges the turntable was rotated 360˚ for obtaining the maximum emission.

SAC 5 Test Setup Configuration 30MHz – 1GHz

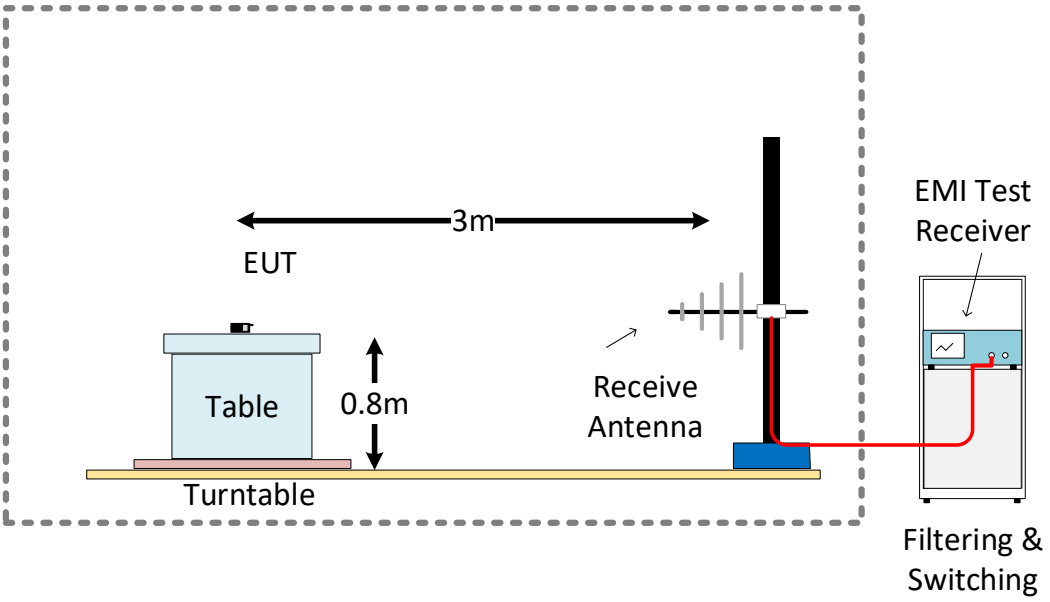

SAC 5 Test Setup Configuration 1GHz – 18GHz

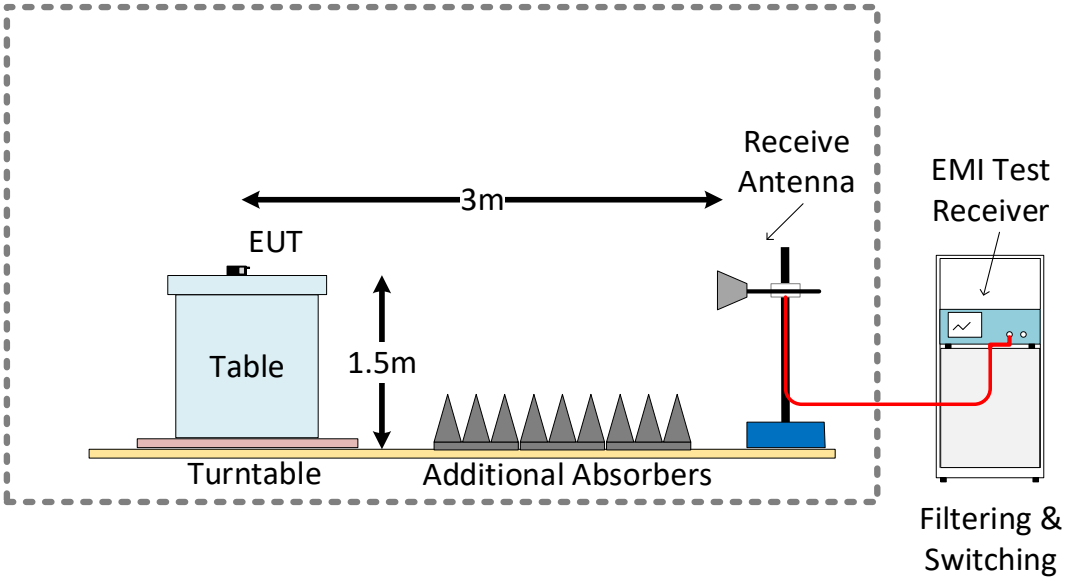

SAC 5 Test Setup Configuration 18GHz – 40GHz

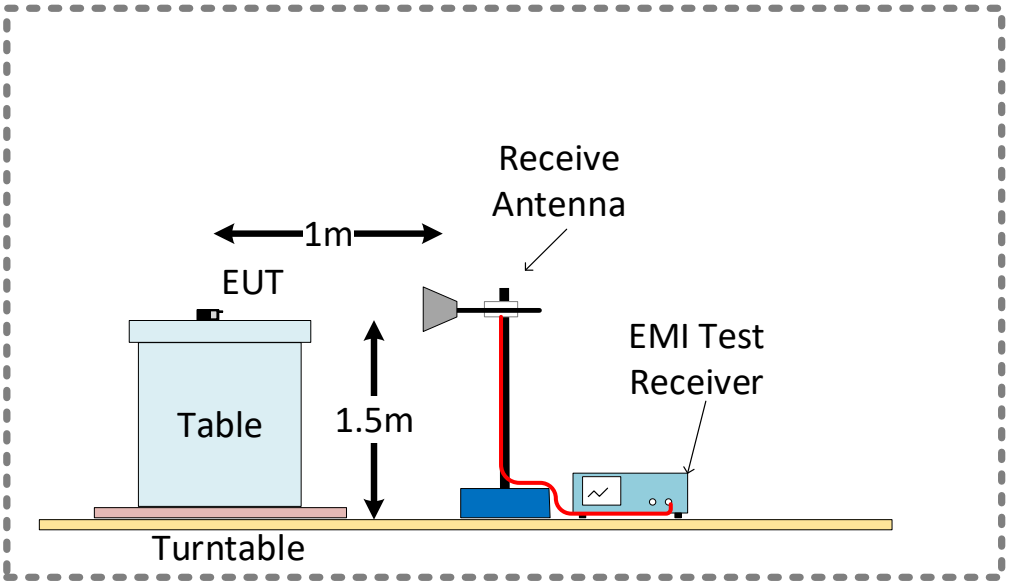

3.5 EUT Configuration During Test

N/A

3.6 EUT Operation Modes

Operation mode	Description
Maximum Light Level	The device was set with the light output at its maximum level

3.7 Deviations from the Test Standard

This product is based on pre-certified module as described in section 2.1, hence a limited test scope has been verified.

Measurement data from certification reports for the module was used in determining which tests to include or exclude from the scope.

3.8 Environmental Conditions

3.8.1 Environmental Conditions – SAC5 (Radiated Emissions)

Environmental Conditions Log – SAC5

Date	Time	Temperature (°C)	Relative Humidity (%)
2021.04.09	08:33	19.5	28

4. TEST RESULTS

4.1 Test Results – AC Power Line Conducted Emissions (Intentional Transmitter)

4.1.1 AC Power Line Conducted Emissions (Intentional) – Test Summary

Test Specification	FCC 47 CFR 15.207 (Part 15 Subpart C)	
Test Engineer & Date	Sam Ebadeh	2021.04.14
EUT and Ancillary Equipment IDs	A003001961-001	None
EUT Operation Mode(s)	Maximum Light Level	
EUT Wireless Configuration(s)	Bluetooth LE 2442 MHz	
EUT Hardware Configuration(s)	Default	
Overall Result	PASS	

Test Parameter	Wireless Configuration	Frequency Range	Result*
AC Conducted Power Line Emissions – “N” Line and “L1” Line	2442 MHz	0.15 – 30 MHz	PASS

* For detailed measurements, see tables and graphs in sections below

4.1.2 AC Power Line Conducted Emissions (Intentional) – Test Details

Test mode condition	Conducted Emissions	
Sweep frequency	150 kHz – 30 MHz	
Standard	FCC 47 Part 15.207	
EUT	A002965790-001	
Ancillary Equipment	None	
Test Engineer	Sam Ebadeh	Date: 2021.04.14

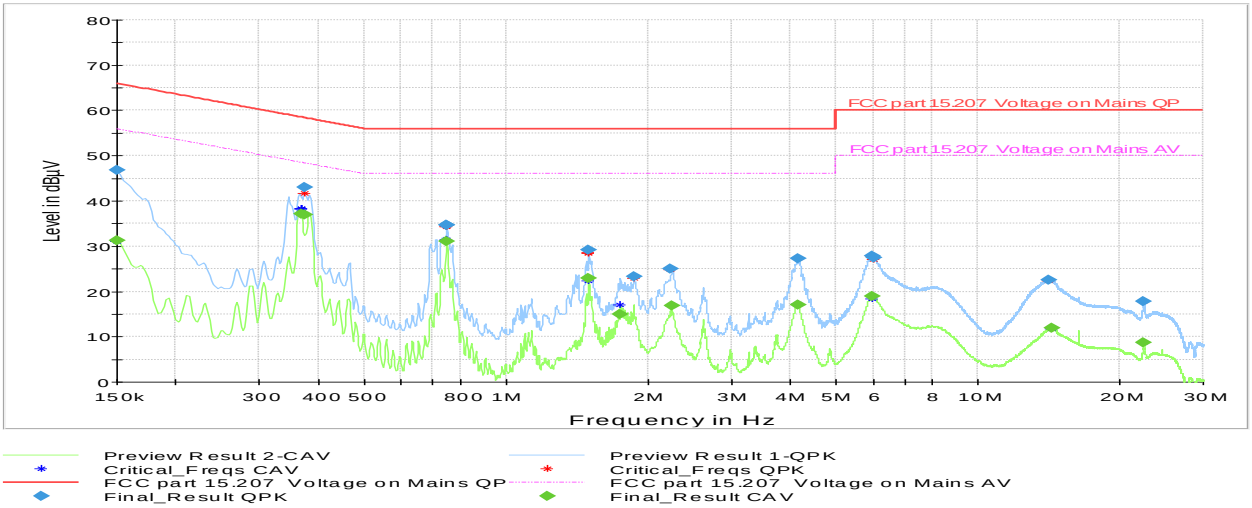

Frequency (MHz)	QuasiPeak (dBµV/m)	CAverage (dBµV/m)	Limit (dBµV/m)	Margin (dB)	Meas. Time	Bandwidth (kHz)	Height (cm)	Pol	Azimuth (deg)
0.150000	---	31.29	56.00	24.71	1000.0	9.000	L1	ON	0.150000
0.150000	46.81	---	66.00	19.19	1000.0	9.000	L1	ON	0.150000
0.368250	---	37.24	48.54	11.30	1000.0	9.000	N	ON	0.368250
0.375000	43.02	---	58.39	15.37	1000.0	9.000	N	ON	0.375000
0.375000	---	36.96	48.39	11.43	1000.0	9.000	N	ON	0.375000
0.748500	34.72	---	56.00	21.28	1000.0	9.000	N	ON	0.748500
0.750750	34.76	---	56.00	21.24	1000.0	9.000	N	ON	0.750750
0.750750	---	31.06	46.00	14.94	1000.0	9.000	N	ON	0.750750
1.500000	---	22.91	46.00	23.09	1000.0	9.000	N	ON	1.500000
1.500000	29.11	---	56.00	26.89	1000.0	9.000	N	ON	1.500000
1.749750	---	14.97	46.00	31.03	1000.0	9.000	N	ON	1.749750
1.864500	23.25	---	56.00	32.75	1000.0	9.000	L1	ON	1.864500
2.235750	24.99	---	56.00	31.01	1000.0	9.000	N	ON	2.235750
2.249250	---	16.92	46.00	29.08	1000.0	9.000	N	ON	2.249250
4.152750	---	17.07	46.00	28.93	1000.0	9.000	L1	ON	4.152750
4.164000	27.28	---	56.00	28.72	1000.0	9.000	L1	ON	4.164000
5.955000	27.82	---	60.00	32.18	1000.0	9.000	N	ON	5.955000
5.964000	---	18.93	50.00	31.07	1000.0	9.000	N	ON	5.964000
6.000000	27.53	---	60.00	32.47	1000.0	9.000	N	ON	6.000000
14.122500	22.53	---	60.00	37.47	1000.0	9.000	L1	ON	14.122500
14.338500	---	11.88	50.00	38.12	1000.0	9.000	L1	ON	14.338500
22.470000	17.74	---	60.00	42.26	1000.0	9.000	L1	ON	22.470000
22.476750	---	8.77	50.00	41.23	1000.0	9.000	L1	ON	22.476750

4.2 Test Results – Radiated Emissions (Intentional Transmitter)

4.2.1 Radiated Emissions (Intentional) – Test Summary

Test Specification	FCC 47 CFR 15.209 (Part 15 Subpart C)	
Test Engineer & Date	Niall Forrester	2021.04.09
EUT and Ancillary Equipment IDs	A003001961-001	None
EUT Operation Mode(s)	Maximum Light Level	
EUT Wireless Configuration(s)	Bluetooth Low Energy in continuous TX mode	
EUT Hardware Configuration(s)	Default	
Overall Result	PASS	

Test Parameter	Wireless Configuration	Frequency Range	Result
Radiated Emissions	Bluetooth LE Low channel 2402 MHz	1 GHz – 18 GHz	PASS
Radiated Emissions	Bluetooth LE Mid channel 2442 MHz	1 GHz – 18 GHz	PASS
Radiated Emissions	Bluetooth LE High channel 2480 MHz	1 GHz – 18 GHz	PASS

4.2.2 Radiated Emissions (Intentional) – Test Details

Low Channel

Test mode condition	Bluetooth Low Energy 1M, Low channel (2402 MHz)	
Antenna orientation	Horizontal and Vertical	
Sweep frequency	1 GHz – 18 GHz	
Standard	47 CFR FCC Part 15 subpart C	
EUT	A003001961-001	
Ancillary Equipment	-	
Test Engineer	Niall Forrester	Date: 2021-04-09
Chamber details	Chamber: SAC 5	

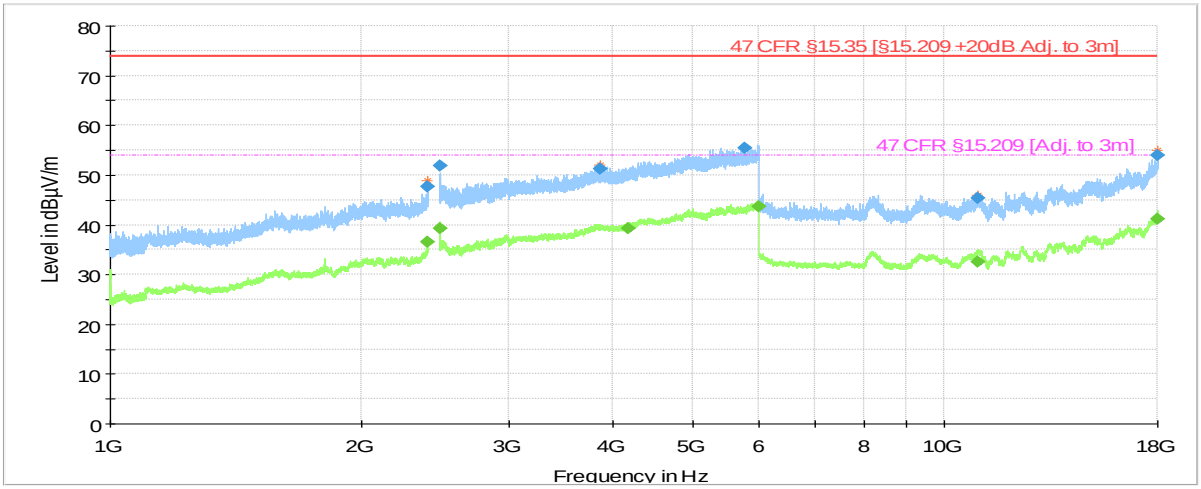

Preview Result 2-AVG
Critical_Freqs AVG
47 CFR §15.35 [§15.209 +20dB Adj. to 3m]
Final_Result PK+
Preview Result 1-PK+
Critical_Freqs PK+
47 CFR §15.209 [Adj. to 3m]
Final_Result AVG

Frequency (MHz)	MaxPeak (dBµV/m)	Average (dBµV/m)	Limit (dBµV/m)	Margin (dB)	Meas. Time (ms)	Bandwidth (kHz)	Height (cm)	Pol	Azimuth (deg)
2399.586009	47.75	---	73.98	26.23	1000.0	1000.000	125.0	V	68.0
2399.980500	---	36.62	53.98	17.36	1000.0	1000.000	101.0	H	26.0
2483.515500	---	39.18	53.98	14.80	1000.0	1000.000	100.0	H	280.0
2483.786000	51.89	---	73.98	22.09	1000.0	1000.000	148.0	H	65.0
3869.998000	51.20	---	73.98	22.78	1000.0	1000.000	100.0	H	112.0
4185.167000	---	39.34	53.98	14.64	1000.0	1000.000	146.0	V	234.0
5769.381000	55.39	---	73.98	18.59	1000.0	1000.000	185.0	H	22.0
5979.250000	---	43.68	53.98	10.30	1000.0	1000.000	175.0	V	290.0
10974.584000	45.32	---	73.98	28.66	1000.0	1000.000	126.0	V	248.0
10975.637000	---	32.54	53.98	21.44	1000.0	1000.000	100.0	V	112.0
17973.346000	53.88	---	73.98	20.10	1000.0	1000.000	146.0	V	68.0
17999.414000	---	41.12	53.98	12.85	1000.0	1000.000	175.0	H	52.0

Mid Channel

Test mode condition	Bluetooth Low Energy 1M, Mid channel (2442 MHz)	
Antenna orientation	Horizontal and Vertical	
Sweep frequency	1 GHz – 18 GHz	
Standard	47 CFR FCC Part 15 subpart C	
EUT	A003001961-001	
Ancillary Equipment	-	
Test Engineer	Joel Efraimsson	Date: 2021-04-09
Chamber details	Chamber: SAC 5	

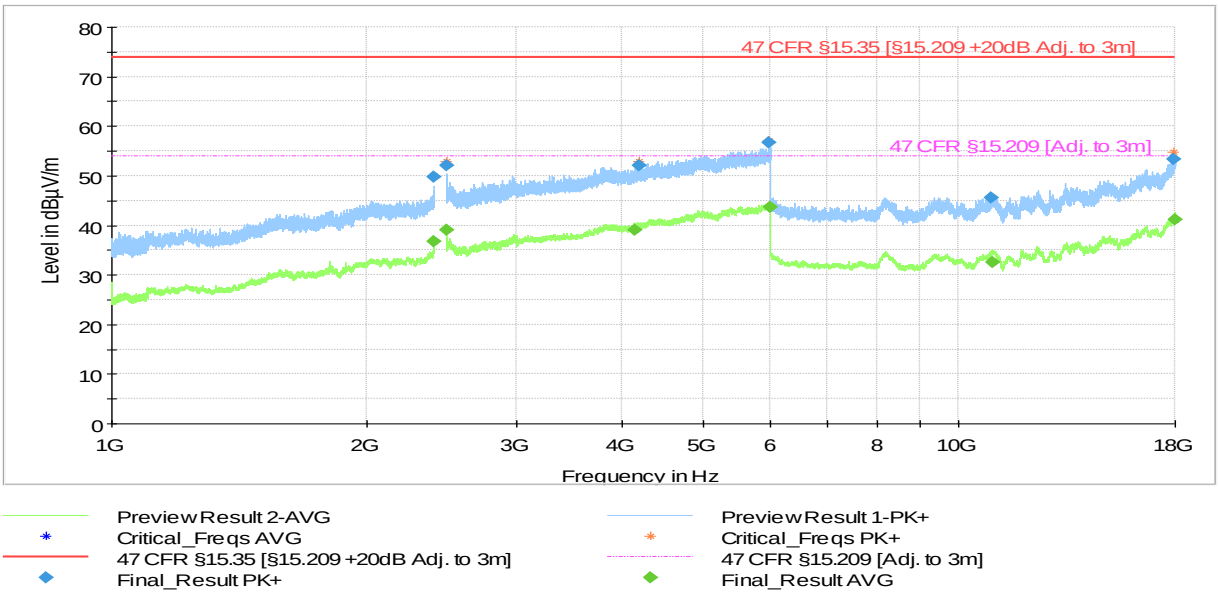

Frequency (MHz)	MaxPeak (dBµV/m)	Average (dBµV/m)	Limit (dBµV/m)	Margin (dB)	Meas. Time (ms)	Bandwidth (kHz)	Height (cm)	Pol	Azimuth (deg)
2399.983500	---	36.82	53.98	17.16	1000.0	1000.000	111.0	H	-22.0
2399.997435	49.74	---	73.98	24.24	1000.0	1000.000	210.0	V	110.0
2483.503645	52.08	---	73.98	21.90	1000.0	1000.000	112.0	V	158.0
2483.568000	---	39.00	53.98	14.98	1000.0	1000.000	125.0	H	131.0
4152.549000	---	39.02	53.98	14.96	1000.0	1000.000	175.0	V	252.0
4201.093000	51.99	---	73.98	21.98	1000.0	1000.000	125.0	V	110.0
5977.014000	56.63	---	73.98	17.35	1000.0	1000.000	206.0	V	112.0
5985.352000	---	43.61	53.98	10.37	1000.0	1000.000	175.0	H	155.0
10919.243000	45.54	---	73.98	28.44	1000.0	1000.000	175.0	H	334.0
10941.729000	---	32.62	53.98	21.36	1000.0	1000.000	170.0	H	202.0
17903.068000	53.38	---	73.98	20.60	1000.0	1000.000	175.0	V	334.0
17988.768000	---	41.22	53.98	12.76	1000.0	1000.000	100.0	V	266.0

High Channel

Test mode condition	Bluetooth Low Energy 1M, High channel (2480 MHz)	
Antenna orientation	Horizontal and Vertical	
Sweep frequency	1 GHz – 18 GHz	
Standard	47 CFR FCC Part 15 subpart C	
EUT	A003001961-001	
Ancillary Equipment	-	
Test Engineer	Joel Efraimsson	Date: 2021-04-09
Chamber details	Chamber: SAC 5	

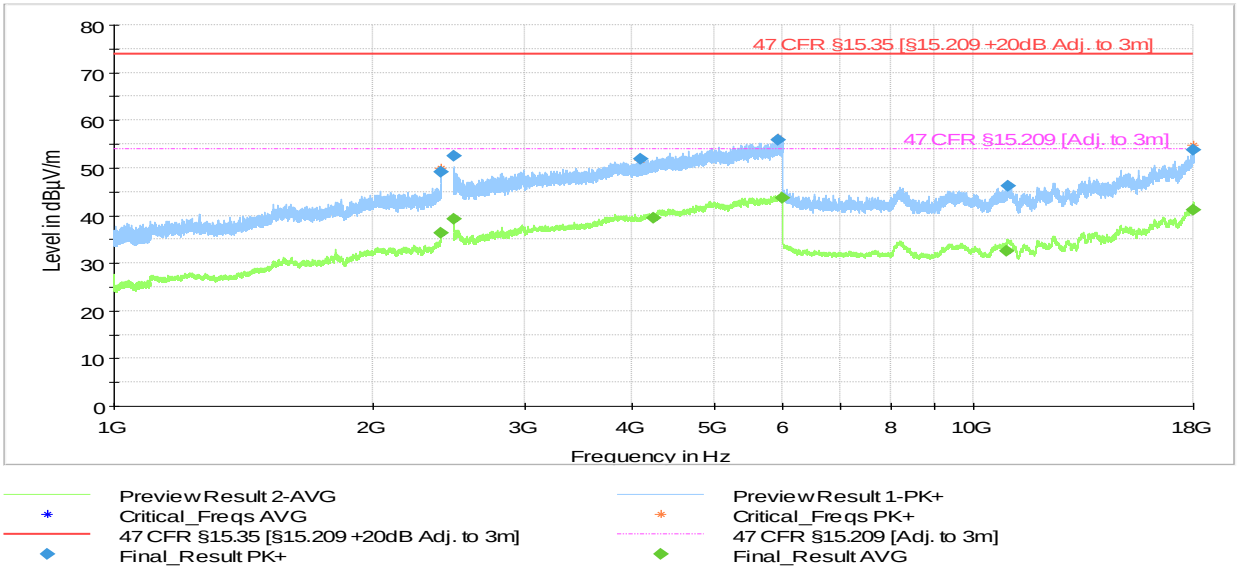

Frequency (MHz)	MaxPeak (dBµV/m)	Average (dBµV/m)	Limit (dBµV/m)	Margin (dB)	Meas. Time (ms)	Bandwidth (kHz)	Height (cm)	Pol	Azimuth (deg)
2399.745416	49.23	---	73.98	24.75	1000.0	1000.000	112.0	V	100.0
2399.816500	---	36.27	53.98	17.71	1000.0	1000.000	112.0	H	292.0
2483.507000	---	39.17	53.98	14.81	1000.0	1000.000	170.0	V	162.0
2483.611000	52.47	---	73.98	21.51	1000.0	1000.000	125.0	H	296.0
4094.388000	51.96	---	73.98	22.02	1000.0	1000.000	125.0	H	41.0
4241.616000	---	39.39	53.98	14.59	1000.0	1000.000	148.0	H	338.0
5912.047000	55.79	---	73.98	18.19	1000.0	1000.000	206.0	H	248.0
5986.431000	---	43.61	53.98	10.37	1000.0	1000.000	100.0	V	26.0
10918.346000	---	32.48	53.98	21.50	1000.0	1000.000	206.0	H	-18.0
10982.851000	46.14	---	73.98	27.84	1000.0	1000.000	135.0	H	68.0
17998.329100	---	41.25	53.98	12.72	1000.0	1000.000	100.0	H	158.0
17999.726580	53.76	---	73.98	20.22	1000.0	1000.000	136.0	H	-22.0

4.3 Test Results – Out of Band Emissions

4.3.1 Out of Band Emissions – Test Summary

Requirement has not been performed. Product is based on certified module VPYLBEE5HY1MW.

4.4 Test Results – Band Edge Compliance (Authorized Band)

4.4.1 Band Edge Compliance (Authorized Band) – Test Summary

Requirement has not been performed. Product is based on certified module VPYLBEE5HY1MW.

4.5 Test Results – Band Edge Compliance (Restricted Band)

4.5.1 Band Edge Compliance (Restricted Band) – Test Summary

Test Specification	47 CFR 15.209 & 15.247 (d)	
Test Engineer & Date	Joel Efraimsson	2021.04.09
EUT and Ancillary Equipment IDs	A003001961-001	None
EUT Operation Mode(s)	Maximum Light Level	
EUT Wireless Configuration(s)	Bluetooth Low Energy in continuous TX mode	
EUT Hardware Configuration(s)	Default	
Overall Result	PASS	

Test Parameter	Wireless Configuration	Result*
Emissions at Band Edge (Rest. Band – Low Edge)	Bluetooth LE Low channel 2402 MHz	PASS
Emissions at Band Edge (Rest. Band – High Edge)	Bluetooth LE Low channel 2480 MHz	PASS

* For detailed measurements, see tables and graphs in sections below

4.5.2 Band Edge Compliance (Restricted Band) – Test Details

Restricted Band – Low Edge

Test mode condition	Bluetooth Low Energy 1M, Low channel (2402 MHz)	
Antenna orientation	Horizontal and Vertical	
Sweep frequency	ISM 2400 Lower Band Edge	
Standard	47 CFR FCC Part 15 subpart C	
EUT	A003001961-001	
Ancillary Equipment	-	
Test Engineer	Joel Efraimsson	Date: 2021-04-09
Chamber details	Chamber: SAC 5	

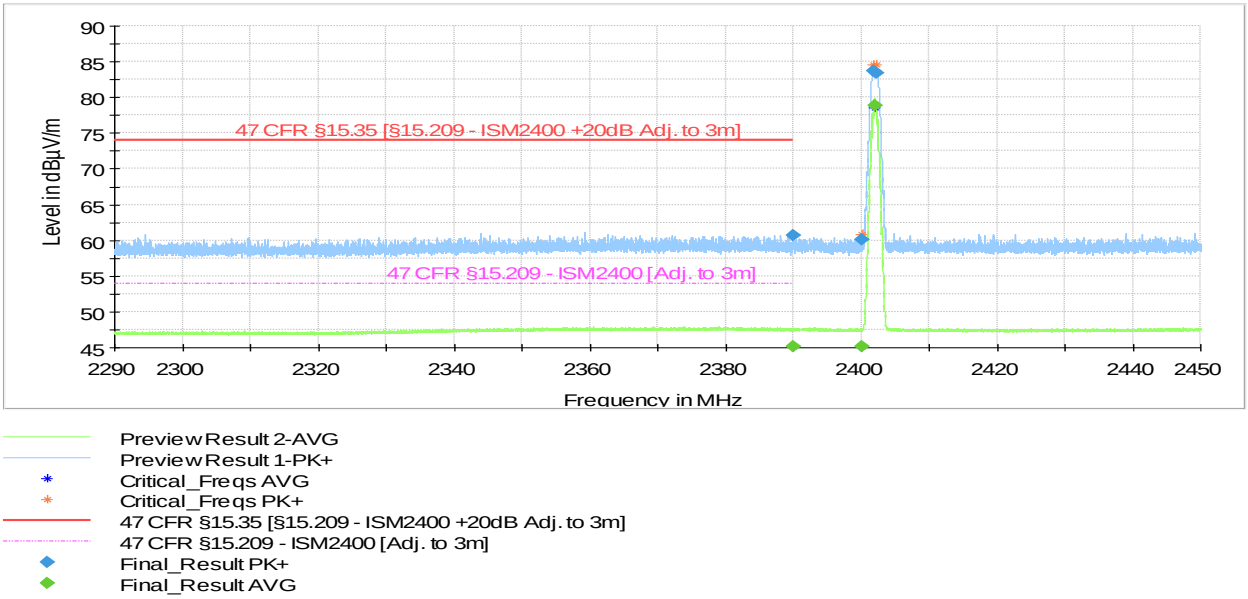

Frequency (MHz)	MaxPeak (dBµV/m)	Average (dBµV/m)	Limit (dBµV/m)	Margin (dB)	Meas. Time (ms)	Bandwidth (kHz)	Height (cm)	Pol	Azimuth (deg)
2390.000000	---	45.13	53.98	8.85	1000.0	1000.000	210.0	H	356.0
2390.000000	60.68	---	73.98	13.30	1000.0	1000.000	157.0	H	193.0
2400.000000	---	45.13	---	---	1000.0	1000.000	122.0	H	354.0
2400.000000	60.05	---	---	---	1000.0	1000.000	210.0	H	258.0
2401.776000	83.70	---	---	---	1000.0	1000.000	111.0	H	307.0
2401.984000	---	78.81	---	---	1000.0	1000.000	169.0	H	317.0
2402.256000	83.39	---	---	---	1000.0	1000.000	111.0	H	316.0

Restricted Band – High Edge

Test mode condition	Bluetooth Low Energy 1M, High channel (2480 MHz)	
Antenna orientation	Horizontal and Vertical	
Sweep frequency	ISM 2400 Upper Band Edge	
Standard	47 CFR FCC Part 15 subpart C	
EUT	A003001961-001	
Ancillary Equipment	-	
Test Engineer	Joel Efraimsson	Date: 2021-04-09
Chamber details	Chamber: SAC 5	

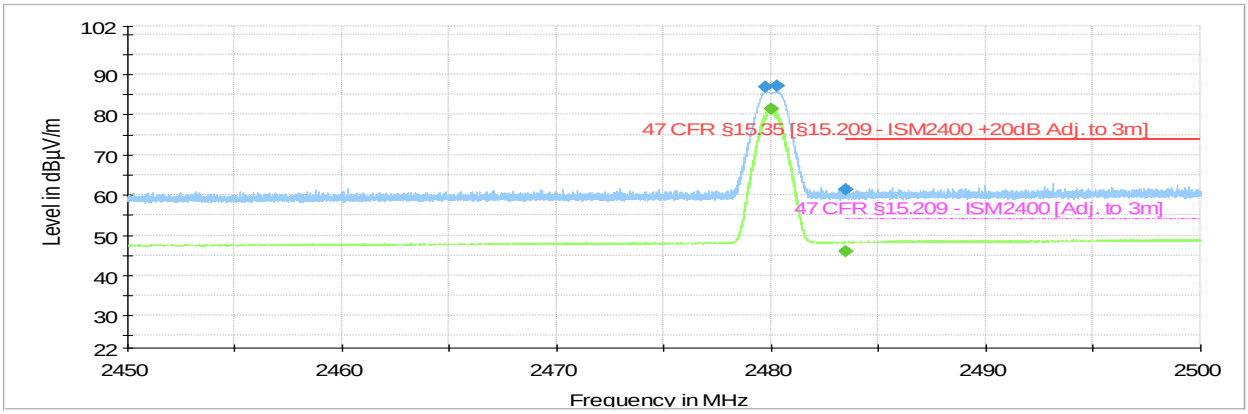

Preview Result 2-AVG
Preview Result 1-PK+
Critical_Freqs AVG
Critical_Freqs PK+
47 CFR §15.35 [§15.209 - ISM2400 +20dB Adj. to 3m]
47 CFR §15.209 - ISM2400 [Adj. to 3m]
Final_Result PK+
Final_Result AVG

Frequency (MHz)	MaxPeak (dBµV/m)	Average (dBµV/m)	Limit (dBµV/m)	Margin (dB)	Meas. Time (ms)	Bandwidth (kHz)	Height (cm)	Pol	Azimuth (deg)
2479.740000	86.97	---	---	---	1000.0	1000.000	111.0	H	315.0
2479.975000	---	81.46	---	---	1000.0	1000.000	111.0	H	314.0
2480.290000	87.02	---	---	---	1000.0	1000.000	112.0	H	314.0
2483.500000	---	45.95	53.98	8.03	1000.0	1000.000	122.0	H	265.0
2483.500000	61.27	---	73.98	12.71	1000.0	1000.000	203.0	H	155.0

4.6 Test Results – 20dB Bandwidth

4.6.1 20dB Bandwidth – Test Summary

Requirement has not been performed. Product is based on certified module VPYLBEE5HY1MW.

4.7 Test Results – Carrier (Hopping Channel) Separation

4.7.1 Carrier (Hopping Channel) Separation – Test Summary

Requirement not performed as the device contains a non-hopping technology.

4.8 Test Results – Number of Hopping Channels

4.8.1 Number of Hopping Channels – Test Summary

Requirement not performed as the device contains a non-hopping technology.

4.9 Test Results – Time of Occupancy (Dwell Time)

4.9.1 Time of Occupancy (Dwell Time) – Test Summary

Requirement not performed as the device contains a non-hopping technology.

4.10 Test Results – 6dB Bandwidth

4.10.1 6dB Bandwidth – Test Summary

Requirement has not been performed. Product is based on certified module VPYLBEE5HY1MW.

4.11 Test Results – Peak Conducted Output Power

4.11.1 Peak Conducted Output Power – Test Summary

Requirement has not been performed. Product is based on certified module VPYLBEE5HY1MW.

4.12 Test Results – Power Spectral Density

4.12.1 Power Spectral Density – Test Summary

Requirement has not been performed. Product is based on certified module VPYLBEE5HY1MW.

5. TEST EQUIPMENT STATUS

5.1 List of Hardware with Calibration Dates

5.1.1 Hardware List – Conducted Emissions System

Type	Manufacturer	Model	Serial Number / ID	Calibration Date	Calibration Due
Two-Line V-network	Rohde & Schwarz	ENV216	101090 2704076	2020.07.16	2021.07.16
Test Receiver 9KHz to 3.5 GHz	Rohde & Schwarz	ESR3	101674 2704016	2020.07.17	2021.07.17
RF PROBE	Fischer Custom Communication	F-52	22 2902256	2019.04.09	2021.04.09
Humidity Temperature Probe	Lufft	OPUS 20	113.0118.0802.033 2771025	2020.07.31	2022.07.31

5.1.2 Hardware List – SAC5 System

Type	Manufacturer	Model	Serial Number / ID	Calibration Date	Calibration Due
EMI Test Receiver	Rohde & Schwarz	ESW44	101760 2881044	2020.07.17	2021.07.17
Ultra Broadband Antenna	Rohde & Schwarz	HL562E	100988 2823181	2019.07.23	2021.07.23
Double Ridged Waveguide Horn Antenna	Rohde & Schwarz	HF907	102678 2823164	2019.07.15	2021.07.15
Control Device	Maturo	NCD	NCD/393/2372.01	N/A	N/A
Open Switch & Control Unit	Rohde & Schwarz	OSP150	100081 2884198	2020.08.04	2021.08.04
Open Switch & Control Unit	Rohde & Schwarz	OSP120	100084 2761253	2020.08.04	2021.08.04
Shielded Filter Unit	Rohde & Schwarz	OSP-F Extension 1	101333 2761265	2020.08.04	2021.08.04
Shielded Filter Unit	Rohde & Schwarz	OSP-F Extension 2	101335 2761266	2020.08.04	2021.08.04
Shielded Filter Unit	Rohde & Schwarz	OSP-F Base Unit	101330 2761262	2020.08.04	2021.08.04
Humidity Temperature Probe	Lufft	OPUS 20	126.0118.0802.033 2771042	2020.07.31	2022.07.31

5.2 Software / Firmware Versions

Equipment	Software / Firmware Name	Version
Conducted Emissions System	EMC 32	V10.60.10
SAC 5	EMC 32	V10.60.10

6. MEASUREMENT UNCERTAINTY

6.1 Measurement Uncertainty for CTE

Parameter	Uncertainty (Coverage Factor k=2)
Maximum Output Power (15.247b)	±0.51 dB
6dB / 20dB Channel Bandwidth & 99% Occupied bandwidth (15.247a)	<5%
Carrier Frequency Separation (15.247a)	N/A
Number of Hopping Channels (15.247a)	N/A
Time of Occupancy – Dwell Time (15.247a)	N/A
Band Edge Compliance of Conducted Emissions (15.247a)	±1.04 dB
Conducted Spurious Emissions (15.247d)	±2.98 dB
Power Spectral Density (15.247e)	±0.51 dB

6.2 Measurement Uncertainty for Conducted Emissions

Parameter	Uncertainty (Coverage Factor k=2)
Conducted emissions with LISN 150KHz to 30 MHz	2.98 dB

6.3 Measurement Uncertainty for SAC 5 (Radiated Emissions & Band Edge)

Parameter	Uncertainty (Coverage Factor k=2)
Field Strength 10 Hz -9 kHz	3.38 dB
Field Strength 9 kHz -30 MHz	3.38 dB
Field Strength 30 MHz -1000 MHz	3.38 dB
Field Strength 1 GHz -18 GHz	4.88 dB
Field Strength 18 GHz - 40 GHz	5.14 dB

7. PHOTOGRAPHS

7.1 Photographs of the EUT

For photographs see appendix.