56说明书正面

56说明书反面

USER MANUAL

RGBW DIMMER

ZEN56 800LR

ZOOZ™ smart move

www.getzooz.com
ask@getzooz.com

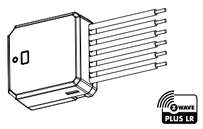

FEATURES

- Manual or Z-Wave on/off, brightness, and RGBW color control
- Perfect for programming your existing RGBW LED strip
- Smooth dimming with instant status updates
- Installs behind your existing wall switch (on/off or momentary)
- **800 series Z-Wave** chip for better range and faster control
- **Z-Wave Long Range** for ultra reliable no-mesh communication
- Advanced configuration including adjustable ramp rate
- Built-in Z-Wave signal repeater for boosted communication
- SmartStart and S2 Security for a safer network

SPECIFICATIONS

- Model Number: ZEN56 800LR
- Power: 12-24 V DC
- **Maximum Load:** 10 A total (6 A / channel)
- Range: Up to 300 feet line of sight (or up to 1300 ft with ZWLR)
- Dimensions: 1.5" tall, 1.4" wide, 0.7" deep
- Operating Temperature: 32-104° F (0-40° C)
- Installation and Use: Indoor only

⚠ CAUTION

This is an electrical device - please use caution when installing and operating the RGBW Dimmer. Remote control of appliances may result in unintentional or automated activation of power.
Do not use this Z-Wave device to control electric heaters or other appliances which produce the risk of fire, burns, or electrical shock when unattended.
To reduce risk of overheating and possible damage to other equipment, do not install this unit to control a receptacle; a motor-operated appliance; a fluorescent lighting fixture; any device over 24 V DC power; or a transformer-supplied fixture. Use with 12-24 V LED strips only.

BEFORE YOU INSTALL

This device is intended for installation in accordance with the National Electric Code and local regulations. It is recommended that a licensed electrician perform this installation.

INSTALLATION

WHAT YOU'LL NEED:

Small flat screwdriver

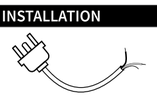

3-wire romex or old 3-wire plug to power the adapter

12 or 24 V DC power adapter

12 or 24 V DC LED strip which draws less than 120 W total at 12 V DC (or 240 W total at 24 V DC)

ZEN56 RGBW DIMMER BASIC WIRING DIAGRAM

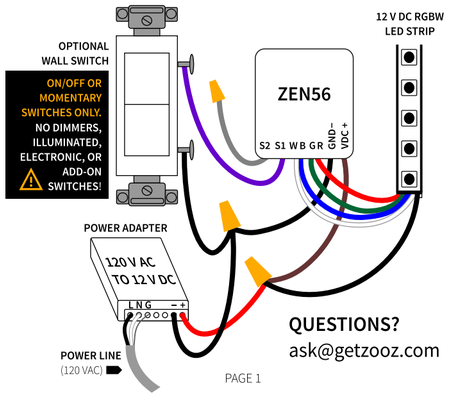

QUESTIONS?
ask@getzooz.com

WIRING: READ IT!

1. CHECK THE LOAD: Low voltage lights only (120 W total at 12 V DC or 240 W total at 24 V DC), DON'T CONNECT THIS RGBW DIMMER TO 120 VAC LIGHTS!
2. POWER OFF: Turn the circuit power off in the breaker panel before you start if you're working with an electrical box or unplug the power supply from the receptacle if you're working with a plug-in adapter.
3. CHECK THE WIRES: If using a plug-free power adapter, you'll need to connect it to line, neutral, and ground as indicated in the instructions for the device. Please make sure you identified all of these wires on your source romex cable or plug cable.

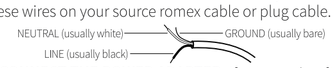

4. CONNECT THE POWER ADAPTER: If using a plug-free power adapter, make the connections from the 120 V AC power source to the appropriate line, neutral, and ground terminals on the power adapter. If using a plug-in power supply, skip this step.
5. CONNECT THE RGBW DIMMER: Use the pigtail wires on the RGBW dimmer to connect the power adapter. Connect the "+" positive terminal on the power supply with the "VDC+" brown pigtail on the RGBW Dimmer, and the "-" negative terminal on the power supply with the "GND -" black pigtail on the ZEN56.
6. CONNECT THE RGBW LED STRIP: Connect the red, green, blue, and white wires from the LED strip with the R G B W pigtails on the dimmer. Use a wire nut to connect the power (usually black) wire from the LED strip with the "VDC +" brown pigtail on the RGBW Dimmer and the "+" positive terminal on the power supply.
7. CONNECT THE WALL SWITCH (OPTIONAL): Connect one of the terminals / screws on the wall switch with the **S1** purple pigtail on the RGBW Dimmer. Use a wire nut to connect the other terminal / screw on the wall switch with connections to the "GND -" pigtail on the RGBW Dimmer and the "-" negative terminal on the power supply. **Do NOT power the wall switch with 120 VAC!** The RGBW Dimmer can be connected to regular on/off switches or momentary push-button switches (to enable dimming from the switch) only.
8. REVIEW ALL CONNECTIONS: Please verify that you've identified all wires and terminals correctly before restoring power to the adapter and testing the set-up. **Make sure that a 24 V DC LED strip is powered by a 24 V DC power supply with enough power to handle the length of your LED strip. This is very important!**

Z-WAVE CONTROL

There are 2 methods to ADD THE DIMMER TO YOUR HUB:

SmartStart: use the hub UI / app to scan the SmartStart code on the device. The SmartStart QR code / security PIN is located on the back of the dimmer. Just power the device for SmartStart inclusion, it will be added automatically. Do NOT press the Z-Wave button. For SmartThings, you may need to tap the Z-Wave button 3 times.
See below for QR codes to hub-specific instructions.

SMARTSTART: SCAN QR CODE / ENTER PIN

Manual inclusion: initiate inclusion (pairing) in the app or hub UI. Make sure the device is powered and finalize the inclusion at the dimmer: tap the Z-Wave button 3 times quickly.

TAP THE Z-WAVE BUTTON 3 TIMES QUICKLY for manual Z-Wave inclusion (NOT SmartStart).

The LED indicator will blink green to signal communication and turn green for 2 seconds if inclusion is successful or turn red for 2 seconds if the pairing attempt fails.

NEED SOME HELP? **ask@getzooz.com**

Choose your hub and scan the QR code with your phone's camera. Then click on the link to access the step-by-step pairing instructions.

Z-Box Hub | Hubitat | Home Assistant | SmartThings

Get more tutorials and helpful tips at ww.support.getzooz.com

TROUBLESHOOTING

The device won't add to your system? Try this:

1. Initiate **EXCLUSION** and click the Z-Wave button 3 times quickly.
2. Click the Z-Wave button **3 times as quickly as you can.**
3. Bring the gateway controller (hub) **closer** to the device, it may be out of range.
4. Get troubleshooting tips for your hub at **www.support.getzooz.com**

EXCLUSION (REMOVING / UNPAIRING DEVICE)

1. Bring your Z-Wave hub close to the device if possible
2. Put the Z-Wave hub into **exclusion mode** (not sure how to do that? ask@getzooz.com)
3. Click the **Z-Wave button** on the device **3 times quickly** (the LED indicator will start blinking green)
4. Your hub will confirm exclusion, the LED indicator on the device will turn green for 2 seconds, and the ZEN56 will disappear from your controller's device list.

FACTORY RESET

If your primary controller is missing or inoperable, you may need to reset the device to factory settings. To reset the ZEN56, **click the Z-Wave button once and immediately after, press and hold it down for 15 seconds**. The LED indicator will flash red during the process and turn solid red for 3 seconds to confirm successful reset.

NOTE: All previously recorded activity and custom settings will be erased from the device's memory.

⚠ WARNING

- This product should be installed indoors upon completion of any building renovations.
- Prior to installation, the device should be stored in a dry, dust-and-mold-proof place.
- Do not install the device in a place with direct sun exposure, high temperature, or humidity.
- Keep away from chemicals, water, and dust.
- Ensure the device is never close to any heat source or open flame to prevent fire.
- Ensure the device is connected to an electric power source that does not exceed the maximum load power.
- No part of the device may be replaced or repaired by the user.

ADVANCED SETTINGS

Here is a selection of settings available to customize your device. **Scan the QR code for a full list of parameters** and look below for how to access them on your hub.

- **Ramp rate** to customize the fade-out and fade-in effect for on/off control
- **Timer** (automatic on/off scheduling)
- **Wall switch** type (on/off or momentary)
- On/off status after **power failure**

SCAN SETTINGS

Choose your hub and scan the QR code with your phone's camera. Then click on the link to learn how to access and change the advanced settings for the device on your hub.

Z-Box Hub | Hubitat | Home Assistant | SmartThings

REGISTER your device within 30 days for extended warranty and more perks:
www.getzooz.com/register

ASSOCIATION

This RGBW Dimmer supports Group 1 with up to 5 devices for Lifeline Group communication and Groups 2-4 with up to 5 devices. This device will send COLOR SWITCH and SWITCH MULTILEVEL REPORT to Group 1, BASIC SET command to group 2, SWITCH MULTILEVEL SET to Group 3, and SWITCH MULTILEVEL START LEVEL CHANGE / SWITCH MULTILEVEL STOP LEVEL CHANGE to Group 4 when operated manually from the wall switch.
You can set direct association to have the dimmer control another Z-Wave device independently of the hub by using Groups 2-4. Not every hub exposes direct association settings in the interface so please go to www.support.getzooz.com to see if your system allows for direct association.

Z-WAVE PLUS LR S2

This product can be included and operated in any Z-Wave network with other Z-Wave certified devices from other manufacturers and/or other applications. All non-battery operated nodes within the network will act as repeaters regardless of vendor to increase reliability of the network. This product features the latest Security 2 (S2) framework to remove smart home network hacking risks. This device is equipped with a unique authentication code for trusted wireless communication.

WARRANTY

This product is covered under a 1-year limited warranty and extender 5-year warranty if registered within 30 days. To read the full warranty policy or file a warranty claim, please go to www.getzooz.com/warranty

IN NO EVENT SHALL ZOOZ OR ITS SUBSIDIARIES AND AFFILIATES BE LIABLE FOR ANY INDIRECT, INCIDENTAL, PUNITIVE, SPECIAL, OR CONSEQUENTIAL DAMAGES, OR DAMAGES FOR LOSS OF PROFITS, REVENUE, OR USE INCURRED BY CUSTOMER OR ANY THIRD PARTY, WHETHER IN AN ACTION IN CONTRACT, OR OTHERWISE EVEN IF ADVISED OF THE POSSIBILITY OF SUCH DA-MAGES. ZOOZ'S LIABILITY AND CUSTOMER'S EXCLUSIVE REMEDY FOR ANY CAUSE OF ACTION ARISING IN CON-NECTION WITH THIS AGREEMENT OR THE SALE OR USE OF THE PRODUCTS, WHETHER BASED ON NEGLIGENCE, STRICT LIABILITY, BREACH OF WARRANTY, BREACH OF AGREEMENT, OR EQUITABLE PRINCIPLES, IS EXPRESSLY LIMITED TO, AT ZOOZ'S OPTION, REPLACEMENT OF, OR REPAYMENT OF THE PURCHASE PRICE FOR THAT PORTION OF PRODUCTS WITH RESPECT TO WHICH DA-MAGES ARE CLAIMED. ALL CLAIMS OF ANY KIND ARISING IN CONNECTION WITH THIS AGREEMENT OR THE SALE OR USE OF PRODUCTS SHALL BE DEEMED WAIVED UNLESS MADE IN WRITING WITHIN THIRTY (30) DAYS FROM ZOOZ'S DELIVERY, OR THE DATE FIXED FOR DELI-VERY IN THE EVENT OF NONDELIVERY.

FCC NOTE
THE MANUFACTURER IS NOT RESPONSIBLE FOR ANY RADIO OR TV INTERFERENCE CAUSED BY UNAUTHORIZED MODIFICATIONS TO THIS EQUIPMENT. SUCH MODIFICATIONS COULD VOID THE USER'S AUTHORITY TO OPERATE THE EQUIPMENT. STORE INDOORS WHEN NOT IN USE. SUITABLE FOR DRY LOCATIONS ONLY. DO NOT IMMERSE IN WATER. NOT FOR USE WHERE DIRECTLY EXPOSED TO WATER. This equipment complies with FCC radiation exposure limits set forth for an uncontrolled environment. The distance between user and products should be no less than 20cm. This device complies with Part 15 of the FCC Rules.
Operation is subject to the following conditions:
1. This device may not cause harmful interference,
2. This device must accept any interference received, including interference that may cause undesired operation.
This equipment has been tested and found to comply with the limits for a Class B digital device, pursuant to part 15 of the FCC Rules.
These limits are designed to provide reasonable protection against harmful interference in a residential installation.
This equipment generates, uses and can radiate radio frequency energy and, if not installed and used according to instructions, may cause harmful interference to radio communications.
However, there is no guarantee that interference will not occur in any given installation.
If this equipment causes harmful interference to radio or television reception, the user may try to correct the interference by taking one or more of the following measures:
- Reorient or relocate receiving antenna
- Increase the separation between equipment and receiver
- Connect equipment into a separate outlet or circuit from receiver
- Consult the dealer or an experienced radio/TV technician for additional assistance
This equipment complies with FCC radiation exposure limits set forth for an uncontrolled environment.The distance between user and products should be no less than 20cm.

All brand names displayed are trademarks of their respective holders.
© Zooz 2025