Meshreen MSK32W ZigBee Module
MSK32W-Mxx series
Data Sheet

For model: MSK32W-M10 and MSK32W-M13,
PMN: K32W Middle Power ZigBee Module with PCB antenna/with u-FL connector

For model: MSK32W-M16,
PMN: K32W High Power ZigBee Module with PCB antenna and u-FL connector

Overview

The MSK32W series modules are ultra-low power, high performance Arm® Cortex®-M4 based wireless microcontrollers supporting Zigbee 3.0, Thread and Bluetooth Low Energy 5.0. The module core chip can be following,

- K32W061/41 - BLE/ZigBee/NFC tag
- QN9090/30 - BLE/NFC tag
- JN5188/89 - ZigBee/NFC tag

In order to meet various application and using scenario, there are three module models available:

- MSK32W-M10 - Middle Power Module with PCB antenna
- MSK32W-M13 - Middle Power Module with u-FL connector
- MSK32W-M16 - High Power Module with Antenna Diversity

Customers can select chip and module type combinations depending on coverage, antenna type and function requirements. Hence, this range of modules allows designers to bring wireless applications to market in the minimum time with significantly reduced development effort and cost.

Block Diagram

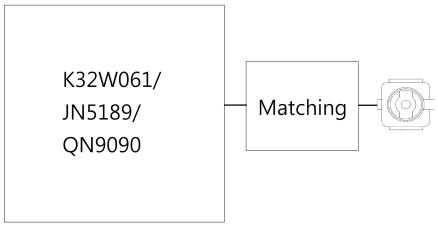

MSK32W-M13 Block Diagram

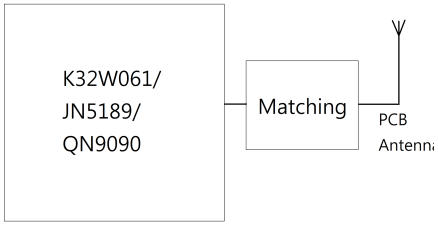

MSK32W-M10 Block Diagram

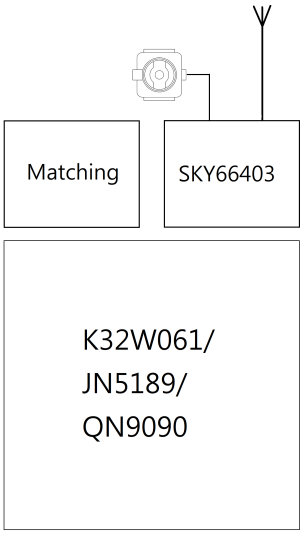

MSK32W-M16 Block Diagram

Benefits:

- Very low current solution for long battery life
- Single chip device to run stack and application
- Flexible sensor interfacing
- Optional Embedded NTAG
- Lead-free and RoHS compliant
- Junction temperature range: 40 C to +125 C

Applications

- Zigbee 3.0, Thread networks
- Bluetooth Low Energy 5.0 networks
- Robust and secure low-power wireless applications
- Smart lighting, door locks, thermostats and home automation
- Wireless sensor networks

Features: Radio

- 2.4 GHz IEEE 802.15.4 2011 compliant
- 2.4 GHz Bluetooth Low Energy 5.0 compliant
- Receiver current 4.3 mA
- IEEE 802.15.4 Receiver sensitivity -100 dBm
- Bluetooth Low Energy 5.0 2 Mb/s high data rate
- Bluetooth Low Energy Receiver sensitivity -97 dBm
- Improved co-existence with WiFi
- Configurable transmit power up to +10 dBm, with 46 dB range
- Transmit power / current +9.5 dBm / 20.3 mA
- Transmit power / current +2.5 dBm / 9.4 mA
- Transmit power / current 0 dBm / 7.4 mA
- 1.9 V to 3.6 V supply voltage
- Antenna Diversity control
- u-FL connector or PCB antenna

Features: Microcontroller

- Integrated ultra Low-power sleep oscillator
- Deep Power-down current 350 nA (with wake-up on IO)
- 128-bit, 192-bit or 256-bit AES security processor
- MAC accelerator with packet formatting, CRCs, address check, auto-acks, timers
- Application CPU, Arm Cortex-M4 CPU
- On-Chip memory: 640 KB flash; 152 KB SRAM
- 12 MHz to 48 MHz system clock speed for low-power
- 2 x I2C-bus interface, operate as either master or slave
- 10 x PWM
- 2 x Low-power timers
- 2 x USART, one with flow control
- 2 x SPI-bus, master or slave
- 1 x PDM digital audio interface
- 19-channel DMA engine
- Up to four GPIOs can be selected as pin interrupts
- 32-bit Real Time clock (RTC) with 1 s resolution.

Content

Overview **5**

Introduction 5

Variants 5

Regulatory Approvals 6

Antenna Specification 6

Electrical Characteristics **6**

Limiting Values 6

Recommended operating conditions 7

DC current 7

Radio Transceiver 8

RF port characteristics 8

IEEE 802.15.4 radio transceiver characteristics: +25^{0}C 8

Bluetooth Low Energy radio transceiver characteristics: +25^{0}C 8

High Power Module control logic 9

Pin Information **10**

Pin configuration 10

Pin description 10

Appendix A Additional Information **12**

Outline Drawing 12

Module PCB Footprint 14

Optimal PCB placement of the module with PCB antenna 14

PCB antenna Radiation Pattern 15

Manufacturing 18

Reflow Profile 18

Tray Information 18

Net weight and Gross weight 19

Related Documents 19

Label Marking 19

FCC Statement 20

ISED Statement 21

High Power Module usage limitation 21

European R & TTE Directive 1999/5/EC Statement 21

RoHS Compliance 21

Disclaimers 21

TradeMarks 22

Version Control 22

Contact Details 22

1. Overview

1.1. Introduction

The MSK32W-Myy module family provides designers with a ready-made component that provides a fully integrated solution for applications, using the NXP K32W061 series of chips they are ultra-low power, high performance Arm® Cortex®-M4 based wireless microcontrollers supporting ZigBee 3.0 ,Thread and Bluetooth Low Energy 5.0 networking stacks to facilitate home and building automation, smart lighting, smart locks and sensor network applications.

The modules integrate all of the RF components required, removing the need to perform expensive RF design and test.Products can be designed by simply connecting sensors and switches to the module IO pins. Hence, this range of modules allows designers to bring wireless applications to market in the minimum time with significantly reduced development effort and cost.

Due to NXP K32W series chips provide following different options

1. K32W series - both support ZigBee and BLE with NFC option
2. JN5189 series - Support ZigBee only with NFC option
3. QN9090 series - Support BLE only with NFC option

Module can be following different options

1. M10 - Support middle power with PCB antenna
2. M13 - Support middle power with u-FL connector
3. M16 - Support high power both PCB and u-FL connector diversity

The Bluetooth and Zigbee can not trasnmit at the same time. M16 only support Zigbee.

All modules have FCC , CE and Industry Canada modular approvals. The variants available are described below.

1.2. Variants

MSxxxx(T)-Myy

MSxxxx(T)	Chip models	-Myy	Module Type
xxxx=K32WT (NFC)	K32W061	-M10	Middle Power Module with PCB antenna
xxxx=K32W	K32W041	-M13	Middle Power Module with u-FL connector
xxxx=9090	QN9090HN	-M16	High Power Module with antenna diversity
xxxx=9090T (NFC)	QN9090THN		
xxxx=9030	QN9030HN		
xxxx=9030T (NFC)	QN9030THN		
xxxx=5189	JN5189HN		
xxxx=5189T (NFC)	JN5189THN		
xxxx=5188	JN5188HN		
xxxx=5188T (NFC)	JN5188THN		

Table 1 Module Variants

For further information about chip specification, please refer to the following links.

K32W061/41 : https://www.nxp.com/docs/en/data-sheet/K32W061.pdf

QN9090/80 : https://www.nxp.com/docs/en/nxp/data-sheets/QN9090(T)QN9030(T).pdf

JN5189/88: https://www.nxp.com/docs/en/nxp/data-sheets/JN5189.pdf

1.3. Regulatory Approvals

The MSK32WT-M10/M13/M16 have been tested against the requirements of the following European standards

Model Number	MSK32WT-M10	MSK32WT-M13	MSK32WT-M16
FCC	FCC 47 CFR Part 15.247, Subpart C FCC 47 CFR Part 2.1091, Subpart J		
ISEC	RSS-247 Issue 2 (2017) RSS-102 Issue 5 (2015)		
CE	EN 300328 v2.2.2 (Zigbee / BLE) EN 300330 v2.1.1 (NFC) EN 62479:2010 (BLE) EN 62311:2008 (Zigbee)		

The module with u-FL connector can connect with an antenna with up to (T.B.D) dBi, 10mW/Mhz power spectral density e.i.r.p is the maximum permitted in Europe. pin to pin compatible

Model Number	FCC	ISED	CE	Note
MSK32WT-M10	2AZ3DK32WM10	27325-K32WM10	Pass	
MSK32WT-M13	2AZ3DK32WM10	27325-K32WM10	Pass	
MSK32WT-M16	2AZ3DK32WM16	27325-K32WM16	Pass	

1.4. Antenna Specification

Model: MSK32WT-M10 and MSK32WT-M16 use a PCB antenna. Antenna Gain: 1.6 dBi
Model: MSK32WT-M13 and MSK32WT-M16 use an external dipole antenna (u-FL connector). Antenna Gain: 2.43 dBi
Modulation Type: O-QPSK(Zigbee)/GFSK(BLE)
Frequency: 2405~2480MHz(Zigbee)/2402~2480(BLE)
CH Numbers: step 5MHz

2. Electrical Characteristics

2.1. Limiting Values

In accordance with the Absolute Maximum Rating System (IEC 60134).

Symbol	Parameter	Conditions	Min	Max	Unit
V_{BAT}	Supply voltage DCDC input		-0.3	3.96	V
V_{DDE}	IO supply voltage		-0.3	3.96	V
V_{RST}	RSTN voltage		-0.3	3.96	V
V_{RFIO}	Voltage on pin RFIO	[1]		-0.3	0

V_{ADC}	ADC pins voltage		-0.3	3.96	V
V_{LX}	LA and LB pin voltage		-0.3	4.6	V_{peak}
T_{stg}	Storage Temperature		-40	125	^{0}C
V_{ESD}	Electrostatic discharge voltage	HBM[2]	--	3000	V
		CDM[3]	--	500	V

[1] Primary input of RF transformer connected to the ground. No DC voltage.

[2] Testing for HBM discharge is performed as specified in JEDEC Standard JS-001.

[3] Testing for CDM discharge is performed as specified in JEDEC Standard JESD22-C101.

2.2. Recommended operating conditions

Symbol	Parameter	Conditions	Min	Max	Unit
V_{BAT}	DCDC supply voltage		1.9	3.6	V
V_{DDE}	IO supply voltage		1.9	3.6	V
T_J	K32W041 temperature		-40	125	C
T_J	K32W061 temperature	TAG not activated for Temp > 105 C	-40	125	C
		TAG activated	-40	105	C

2.3. DC current

Conditions		MSK32W-M10/M13	MSK32W-M16	Unit
radio in RX mode (IEEE 802.15.4 and Bluetooth Low Energy)		4.3	T.B.D	mA
radio in TX mode (IEEE 802.15.4 and Bluetooth Low Energy)				
	output power 0 dBm	7.4	T.B.D	mA
	output power +3 dBm	9.4	T.B.D	mA
	output power +10 dBm	20.3	T.B.D	mA
Current consumption measured on Vbat, CPU core running CoreMark from embedded Flash memory, system clock 48 Mhz		2.9	2.9	mA

2.4. Radio Transceiver

2.4.1. RF port characteristics

Single-ended; Impedance = 50 Ω; V_{DD} = 1.9 V to 3.6 V; T_j = -40°C to +125°C; unless otherwise specified.

Symbol	Parameter	Min	Typ	Max	Unit
Frange	Frequency range	2.4		2.485	GHz

2.4.2. IEEE 802.15.4 radio transceiver characteristics: +25^{0}C

V_{DD} = 1.9 V to 3.6 V; unless otherwise specified.

Symbol	Parameter	Conditions	MSK32W-M10 /M13	MSK32W-M 16	Unit
Receiver					
S_{RX}	Receiver sensitivity	1 % PER, as per IEEE 802.15.4	-99	-103	dBm
NF	Noise Figure	Max gain [1]	7.3	6	dB
$P_{inMaxRX}$	Maximum receiver input power	1 % PER, measured as sensitivity	10	15	dBm
C_{och}	Co-channel Interference rejection	1 % PER, with wanted signal 3 dB above sensitivity as per IEEE 802.15.4 [2]	-2.1	-2.1	dB
Transmitter					
P_{outMax}	Maximum output power		10	20	dBm
EVM	Error vector magnitude	With IEEE 802.15.4 channel at +10 dBm	6.3	T.B.D	%
OEVM	Offset error vector magnitude	With IEEE 802.15.4 channel at +10 dBm	0.33	T.B.D	%
PSD	Power spectral density	Relative density at greater than 3.5 MHz offset as per IEEE 802.15.4 at +10 dBm	-37.4	T.B.D	dBc

[1] Considering an integrated BW of 2 MHz, and a minimum SNR of 4 dB for the demodulator

2.4.3. Bluetooth Low Energy radio transceiver characteristics: +25^{0}C

V_{DD} = 1.9 V to 3.6 V; unless otherwise specified.

Symbol	Parameter	Conditions	MSK32W-M10 /M13	MSK32W-M 16	Unit

Receiver Bluetooth Low Energy 1Mb/s					
$S_{RX_BLE_1M}$	Receiver sensitivity	0.1 % BER	-96	-100	dBm
NF	Noise Figure	Max gain [1]	7	6	dB
$P_{inMaxRX_BLE_1M}$	Maximum receiver input power	0.1 % BER	10	15	dBm
$C_{Och_BLE_1M}$	Co-channel Interference rejection	0.1 % BER, with wanted channel at -67 dBm [2]	-7	-7	dB
Transmitter Bluetooth Low Energy 1Mb/s					
$P_{outMax_BLE_1M}$	Maximum output power		10	20	dBm

[1] Considering an integrated BW of 1 MHz, and a minimum SNR of 9 dB for the demodulator.
[2] Interference rejection 1 Mb/s is the difference between the power of the wanted Bluetooth Low Energy 1 Mb/s at -67 dBm and the power of the modulated interferer Bluetooth Low Energy 1 Mb/s, for 0.1% BER.

2.4.4. High Power Module control logic

LOGIC INPUTS			LOGIC OUTPUTS				FEM STATE
LNA_Bypass	PIO_5/RFRX	PIO_4/RFTX	CSD Tie high	CRX =PIO_5/RFRX	CTX =PIO_4/RFTX	CPS =LNA_BYPASS NOR PIO_4/RFTX	
0	0	0	1	0	0	1	SLEEP
0	0	1	1	0	1	0	TX ON
0	1	0	1	1	0	1	RX BYP
0	1	1	1	1	1	0	N/A
1	0	0	1	0	0	0	SLEEP
1	0	1	1	0	1	0	TX ON
1	1	0	1	1	0	0	RX LNA
1	1	1	1	1	1	0	N/A

Antenna Diversity logic control		
Ant_SEL (Pin 2)	Antenna Port	Antenna Type
0	ANT1	PCB Antenna
1	ANT2	u-FL connector

3. Pin Information

3.1. Pin configuration

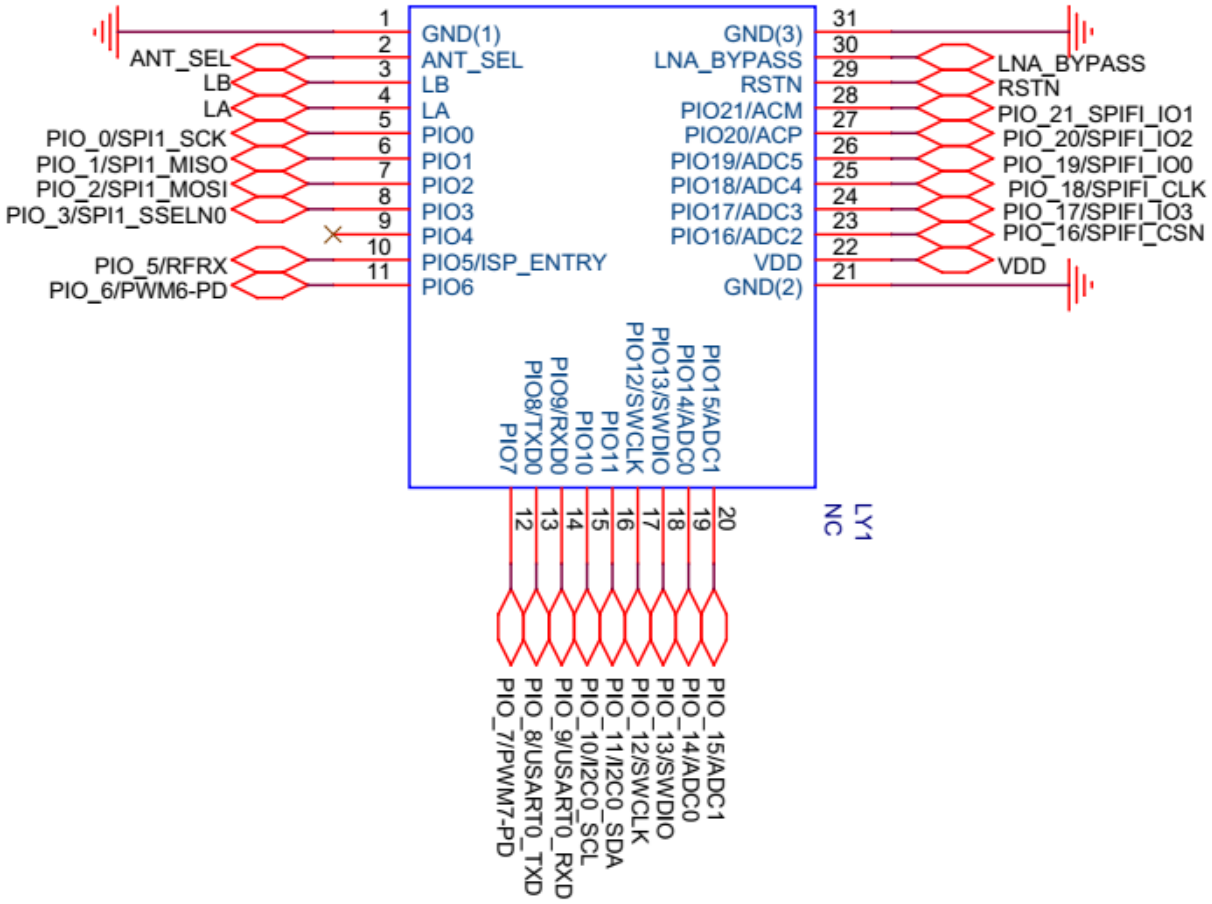

3.2. Pin description

Pin	Symbol	Type	Default	Description
1	GND	G		Vss GND
2	ANT_SEL	I	Input	Connect to GPIO signal to control antenna switch
3	LB			NFC tag antenna input B
4	LA			NFC tag antenna input A
5	PIO0	IO	GPIO0	**GPIO0** — General Purpose digital Input/Output 0
				USART0_SCK — Universal Synchronous/Asynchronous Receiver/Transmitter 0 - synchronous clock
				USART1_TXD — Universal Synchronous/Asynchronous Receiver/Transmitter 1 - transmit data output
				PWM0 — Pulse Width Modulator output 0

				SPI1_SCK — Serial Peripheral Interface-bus 1 clock input/output
				PDM0_DATA — Pulse Density Modulation Data input from digital microphone (channel 0)
6	PIO1	IO	GPIO1	**GPIO1** — General Purpose digital Input/Output 1
				USART1_RXD — Universal Synchronous/Asynchronous Receiver/Transmitter 1 - receive data input
				PWM1 — Pulse Width Modulator output 1
				SPI1_MISO — Serial Peripheral Interface-bus 1 master data input
				PDM0_CLK — Pulse Density Modulation Clock output to digital microphone (channel 0)
7	PIO2	IO	GPIO2	**GPIO2** — General Purpose digital Input/Output 2
				SPI0_SCK — Serial Peripheral Interface-bus 0 clock input/output
				PWM2 — Pulse Width Modulator output 2
				SPI1_MOSI — Serial Peripheral Interface-bus 1 master output slave input
				USART0_RXD — Universal Synchronous/Asynchronous Receiver/Transmitter 0 - receive data input
				ISO7816_RST — RST signal, output, for ISO7816 interface
				MCLK — External clock, can be provided to DMIC IP
8	PIO3	IO	GPIO3	**GPIO3** — General Purpose digital Input/Output 3
				SPI0_MISO — Serial Peripheral Interface-bus 0 master input
				PWM3 — Pulse Width Modulator output 3
				SPI1_SSELN0 — Serial Peripheral Interface-bus 1 slave select not 0
				USART0_TXD — Universal Synchronous/Asynchronous Receiver/Transmitter 0 - transmit data output
				ISO7816_CLK — Clock output for ISO7816 interface
9	PIO4	IO	GPIO4	**GPIO4** — General Purpose digital Input/Output 4
				SPI0_MOSI — Serial Peripheral Interface-bus 0 master output slave input
				PWM4 — Pulse Width Modulator output 4
				SPI1_SSELN1 — Serial Peripheral Interface-bus 1 slave select not 1
				USART0_CTS — Universal Synchronous/Asynchronous Receiver/Transmitter 0 - Clear To Send input
				ISO7816_IO — IO of ISO7816 interface
				RFTX — Radio Transmit Control Output

				ISP_SEL — In-System Programming Mode Selection
10	PIO5	IO	GPIO5/ISP_Entry	**GPIO5/ISP_ENTRY** — General Purpose digital Input/Output 5; In-System Programming Entry
				SPI0_SSELN — Serial Peripheral Interface-bus 0 slave select not
				SPI1_MISO — Serial Peripheral Interface-bus 1 master data input
				SPI1_SSELN2 — Serial Peripheral Interface-bus 1 slave select not 2
				USART0_RTS — Universal Synchronous/Asynchronous Receiver/Transmitter 0 - Request To Send output
				RFRX — Radio Receiver Control Output
11	PIO6	IO	GPIO6	**GPIO6** — General Purpose digital Input/Output 6
				USART0_RTS — Universal Synchronous/Asynchronous Receiver/Transmitter 0 - Request to Send output
				CT32B1_MAT0 — 32-bit CT32B1 match output 0
				PWM6 — Pulse Width Modulator output 6
				I2C1_SCL — I2C-bus 1 master/slave SCL input/output
				USART1_TXD — Universal Synchronous/Asynchronous Receiver/Transmitter 1 - transmit data output
				ADE — Antenna Diversity Even output
				SPI0_SCK — Serial Peripheral Interface 0- synchronous clock
12	PIO7	IO	GPIO7	**GPIO7** — General Purpose digital Input/Output 7
				USART0_CTS — Universal Synchronous/Asynchronous Receiver/Transmitter 0 - Clear to Send input
				CT32B1_MAT1 — 32-bit CT32B1 match output 1
				PWM7 — Pulse Width Modulator output 7
				I2C1_SDA — I2C-bus 1 master/slave SDA input/output
				USART1_RXD — Universal Synchronous/Asynchronous Receiver/Transmitter 1 - receive data input
				ADO — Antenna Diversity Odd Output
				SPI0_MISO — Serial Peripheral Interface-bus 0 master input
13	PIO8	IO	GPIO3/TXD0	**GPIO8** — General Purpose digital Input/Output 8
				USART0_TXD — Universal Synchronous/Asynchronous Receiver/Transmitter 0 - transmit data output
				CT32B0_MAT0 — 32-bit CT32B0 match output 0
				PWM8 — Pulse Width Modulator output 8
				ANA_COMP_OUT — Analog Comparator digital output

				PDM1_DATA — Pulse Density Modulation Data input from digital microphone (channel 1)
				SPI0_MOSI — Serial Peripheral Interface-bus 0 master output slave input
				RFTX — Radio Transmit Control Output
14	PIO9	IO	GPIO9/RXD0	**GPIO9** — General Purpose digital Input/Output 9
				USART0_RXD — Universal Synchronous/Asynchronous Receiver/Transmitter 0 - receive data input
				CT32B1_CAP1 — 32-bit CT32B1 capture input 1
				PWM9 — Pulse Width Modulator output 9
				USART1_SCK — Universal Synchronous/Asynchronous Receiver/Transmitter 1 - synchronous clock
				PDM1_CLK — Pulse Density Modulation Clock output to digital microphone (channel 1)
				SPI0_SSELN — Serial Peripheral Interface-bus 0 slave select not
				ADO — Antenna Diversity Odd Output
15	PIO10	IO	GPIO10	**GPIO10** — General Purpose digital Input/Output 10
				CT32B0_CAP0 — 32-bit CT32B0 capture input 0
				USART1_TXD — Universal Synchronous/Asynchronous Receiver/Transmitter 1 - transmit data output
				RFTX — Radio Transmit Control Output
				I2C0_SCL — I2C-bus 0 master/slave SCL input/output (open drain)
				SPI0_SCK — Serial Peripheral Interface-bus 0 clock input/output
				PDM0_DATA — Pulse Density Modulation Data input from digital microphone (channel 0)
16	PIO11	IO	GPIO11	**GPIO11** — General Purpose digital Input/Output 11
				CT32B1_CAP0 — 32-bit CT32B1 capture input 0
				USART1_RXD — Universal Synchronous/Asynchronous Receiver/Transmitter 1 - receive data input
				RFRX — Radio Receiver Control Output
				I2C0_SDA — I2C-bus 0 master/slave SDA input/output (open drain)
				SPI0_MISO — Serial Peripheral Interface-bus 0 master input slave output
				PDM0_CLK — Pulse Density Modulation Clock output to digital microphone (channel 0)
17	PIO12	IO	GPIO12	**GPIO12** — General Purpose digital Input/Output 12

				SWCLK — Serial Wire Debug Clock
				PWM0 — Pulse Width Modulator output 0
				I2C1_SCL — I2C-bus 1 master/slave SCL input/output (open drain)
				SPI0_MOSI — Serial Peripheral Interface-bus 0 master output slave input
				ANA_COMP_OUT — Analog Comparator digital output
				IR_BLASTER — Infra-Red Modulator output
18	PIO13	IO	GPIO13	**GPIO13** — General Purpose digital Input/Output 13
				SPI1_SSELN2 — Serial Peripheral Interface-bus 1, slave select not 2
				SWDIO — Serial Wire Debug Input/Output
				PWM2 — Pulse Width Modulator output 2
				I2C1_SDA — I2C-bus 1 master/slave SDA input/output (open drain)
				SPI0_SSELN — Serial Peripheral Interface-bus 0, slave select not
19	PIO14	IO	GPIO14	**ADC0** — ADC input 0
				GPIO14 — General Purpose digital Input/Output 14
				SPI1_SSELN1 — Serial Peripheral Interface-bus 1, slave select not 1
				CT32B0_CAP1 — 32-bit CT32B0 capture input 1
				PWM1 — Pulse Width Modulator output 1
				SWO — Serial Wire Output
				USART0_SCK — Universal Synchronous/Asynchronous Receiver/Transmitter 0 - synchronous clock
				MCLK — External clock, can be provided to DMIC IP
				RFTX — Radio Transmit Control Output
20	PIO15	IO	GPIO15	**ADC1** — ADC input 1
				GPIO15 — General Purpose digital Input/Output 15
				SPI1_SCK — Serial Peripheral Interface-bus 1, clock input/output
				ANA_COMP_OUT — Analog Comparator digital output
				PWM3 — Pulse Width Modulator output 3
				PDM1_DATA — Pulse Density Modulation Data input from digital microphone (channel 1)
				I2C0_SCL — I2C-bus 0 master/slave SCL input/output (open drain)
				RFRX — Radio Receiver Control Output
21	GND	G		Vss GND

22	VDD	P		Supply voltage DC input
23	PIO16	IO	GPIO16	**ADC2** — ADC input 2
				GPIO16 — General Purpose digital Input/Output 16
				SPI1_SSELN0 — Serial Peripheral Interface-bus 1, slave select not 0
				PWM5 — Pulse Width Modulator output 5
				PDM1_CLK — Pulse Density Modulation Clock output to digital microphone (channel 1)
				SPIFI_CSN — Quad-SPI Chip Select Not, output
				ISO7816_RST — RST signal, output, for ISO7816 interface
				I2C0_SDA — I2C-bus 0 master/slave SDA input/output (open drain)
24	PIO17	IO	GPIO17	**ADC3** — ADC input 3
				GPIO17 — General Purpose digital Input/Output 17
				SPI1_MOSI — Serial Peripheral Interface-bus 1, master output slave input
				SWO — Serial Wire Output
				PWM6 — Pulse Width Modulator output 6
				SPIFI_IO3 — Quad-SPI Input/Output 3
				ISO7816_CLK — Clock output for ISO7816 interface
				CLK_OUT — Clock out
25	PIO18	IO	GPIO18	**ADC4** — ADC input 4
				GPIO18 — General Purpose digital Input/Output 18
				SPI1_MISO — Serial Peripheral Interface-bus 1, master data input
				CT32B0_MAT1 — 32-bit CT32B0 match output 1
				PWM7 — Pulse Width Modulator output 7
				SPIFI_CLK — Quad-SPI Clock output
				ISO7816_IO — IO of ISO7816 interface
				USART0_TXD — Universal Synchronous/Asynchronous Receiver/Transmitter 0 - transmit data output
26	PIO19	IO	GPIO19	**ADC5** — ADC input 5
				GPIO19 — General Purpose digital Input/Output 19
				ADO — Antenna Diversity Odd Output
				PWM4 — Pulse Width Modulator output 4
				SPIFI_IO0 — Quad-SPI Input/Output 0

				USART1_RXD — Universal Synchronous/Asynchronous Receiver/Transmitter 1 - receive data input
				CLK_IN — External clock
				USART0_RXD — Universal Synchronous/Asynchronous Receiver/Transmitter 0 - receive data input
27	PIO20	IO	GPIO20	**ACP** — Analog Comparator Positive input
				GPIO20 — General Purpose digital Input/Output 20
				IR_BLASTER — Infra-Red Modulator output
				PWM8 — Pulse Width Modulator output 8
				RFTX — Radio Transmit Control Output
				SPIFI_IO2 — Quad-SPI Input/Output 2
				USART1_TXD — Universal Synchronous/Asynchronous Receiver/Transmitter 1 - transmit data output
28	PIO21	IO	GPIO21	**ACM** — Analog Comparator Negative input
				GPIO21 — General Purpose digital Input/Output 21
				IR_BLASTER — Infra-Red Modulator output
				PWM9 — Pulse Width Modulator output 9
				RFRX — Radio Receiver Control Output
				SWO — Serial Wire Output
				SPIFI_IO1 — Quad-SPI Input/Output 1
				USART1_SCK — Universal Synchronous/Asynchronous Receiver/Transmitter 1 - synchronous clock
29	RSTN	I		RSTN- Reset input (Low active)
30	LNA_BYPASS	I	Input	Connect to GPIO signal to control Front End Module State
31	GND	G		Vss GND

Appendix A Additional Information

A1. Outline Drawing

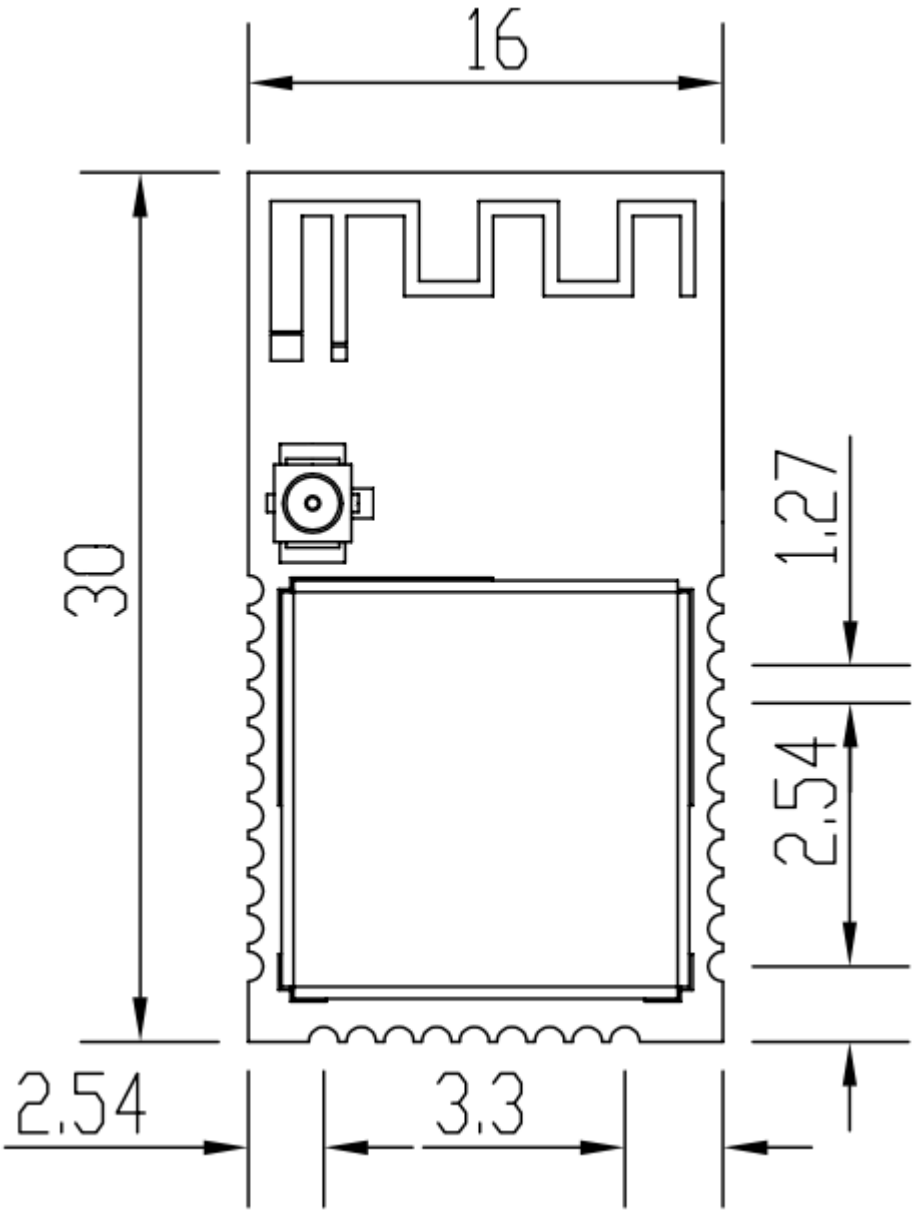

Thickness: 3.4mm
MSK32W-M10/M13 Outline Drawing

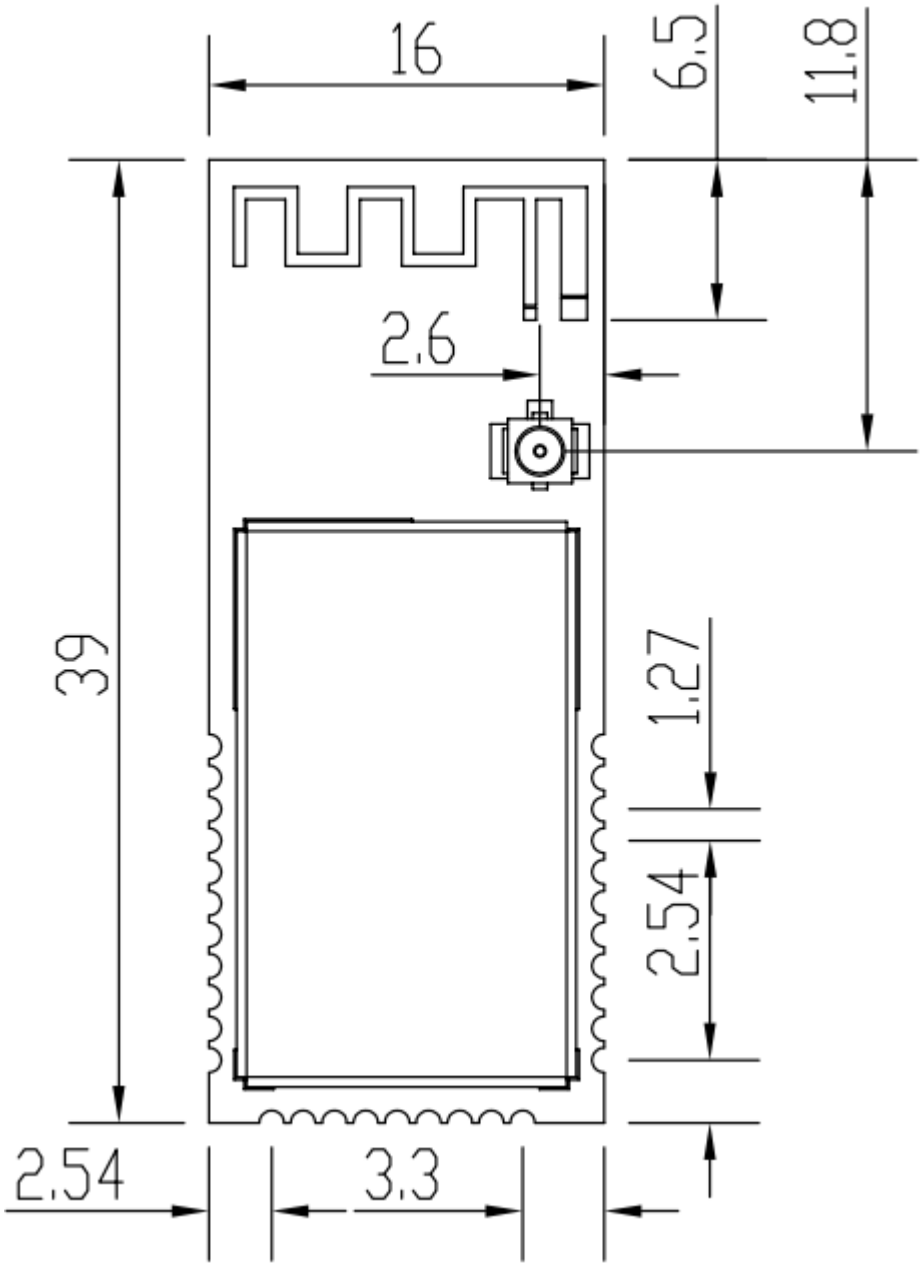

Thickness: 3.4mm

Figure 5 MSK32W-M16 Outline Drawing

A2. Module PCB Footprint

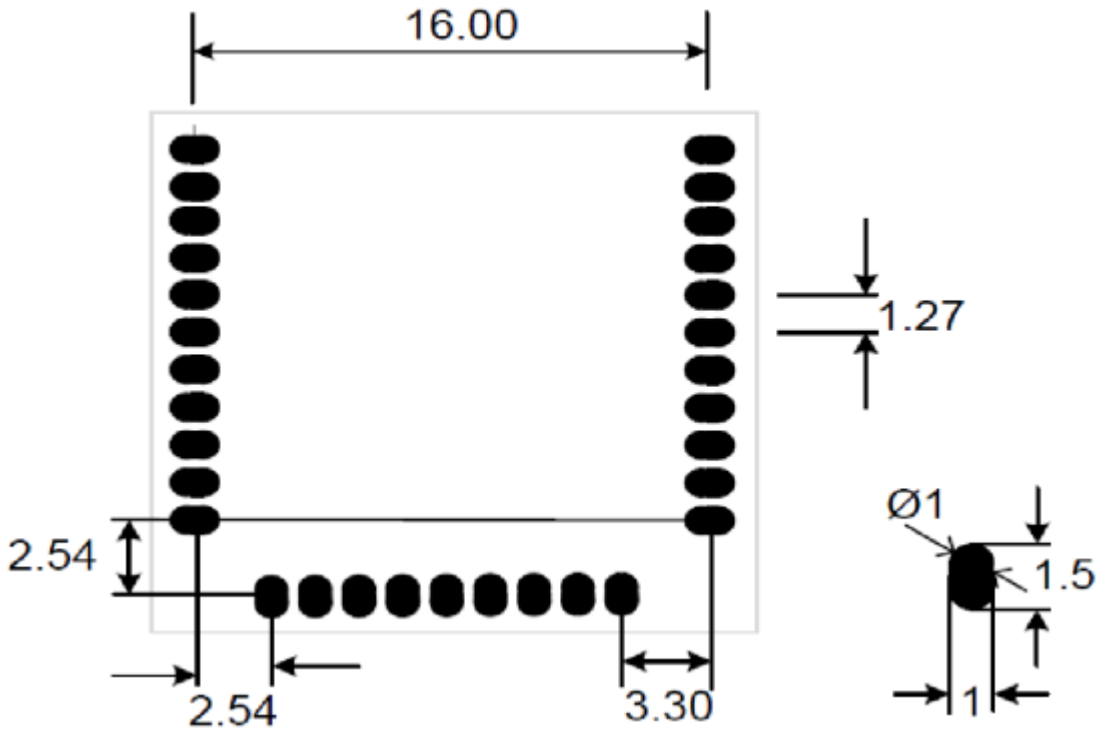

Note 1: All modules have the same footprint
Note 2: All Dimensions are mm

A3. Optimal PCB placement of the module with PCB antenna

The MSK32W-M10/M16 module features an optimized, low cost, integrated, inverted F, printed PCB antenna. The antenna has a vertically polarized near omnidirectional radiation pattern and up to 1.6 dBi of peak gain. The PCB design has been elongated in order to increase the ground plane area which increases the antenna efficiency. This allows standalone operation without any additional ground plane however care must be taken when mounting this module onto another PCB. The area around the antenna must be kept clear of conductors or other metal objects for an absolute minimum of 20 mm. This is true for all layers of the PCB and not just the top layer. Any conductive objects close to the antenna could severely disrupt the antenna pattern resulting in deep nulls and high directivity in some directions.
The diagrams below show various possible scenarios. The top 3 scenarios are correct; the ground plane may be placed beneath the MSK32W-M10/M16 module as long as it does not protrude beyond the edge of the top layer ground plane on the module PCB.
The bottom 3 scenarios are incorrect; the left hand side example because there is ground plane underneath the antenna, the middle example because there is insufficient clearance around the antenna (it is best to have no conductors anywhere near the antenna), finally the right hand example has a battery's metal casing in the recommended keep out area.

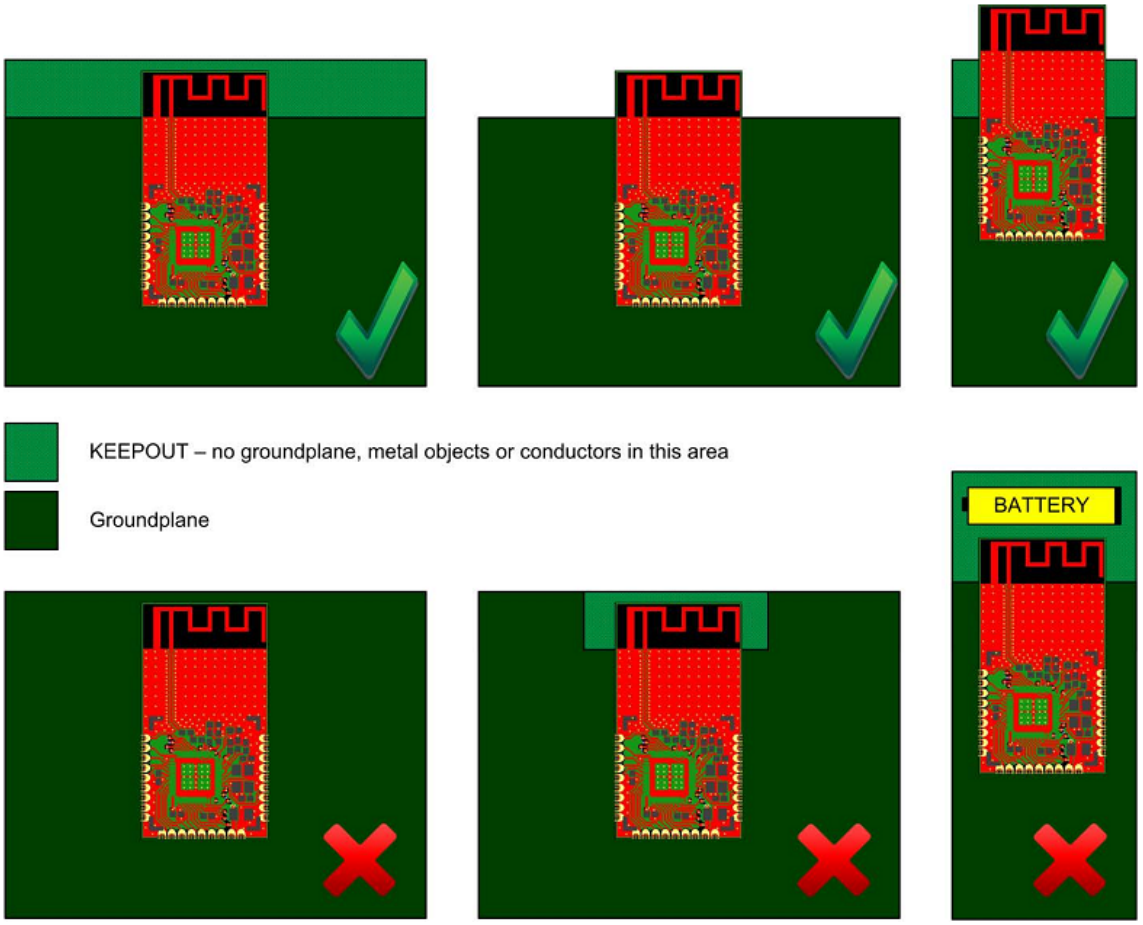

Figure 7 Optimal PCB placement

A4. PCB antenna Radiation Pattern

The 2D XY plots for each channel are shown in below,

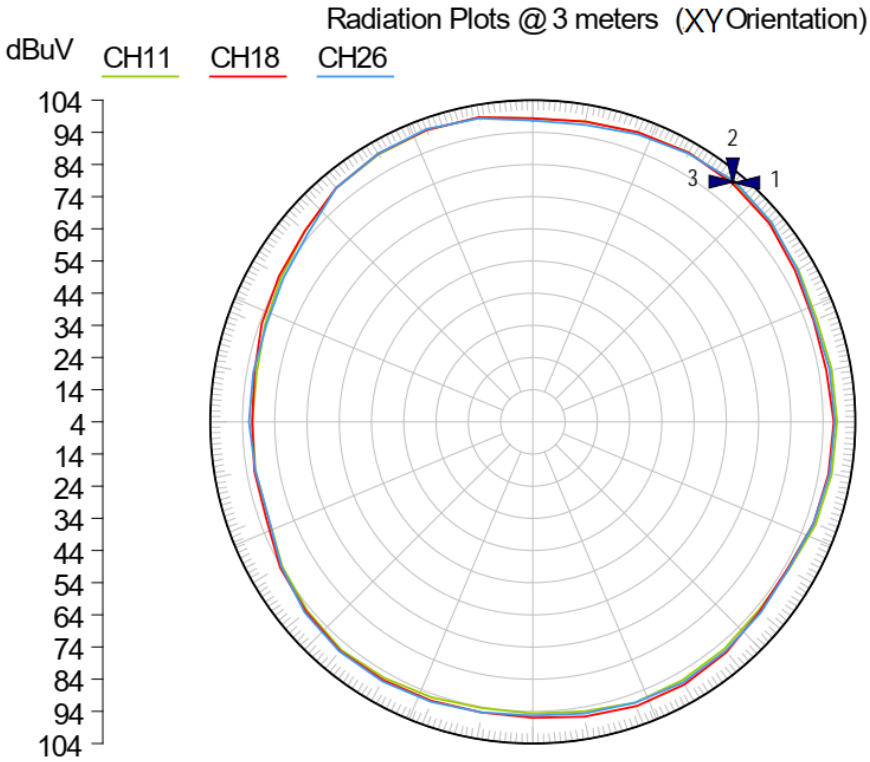

Mkr	Trace	X-Axis	Value
1	CH11	40.0 deg	101.04 dBuV
2	CH18	40.0 deg	100.67 dBuV
3	CH26	40.0 deg	101.26 dBuV

These are actual measurements in an anechoic chamber with the JN5168-001-M00 mounted on a DR1174 carrier board from the JN516x-EK001 Evaluation kit. The device under test and the antenna height was 1m and the values are in dBuV/m at a distance of 3m.

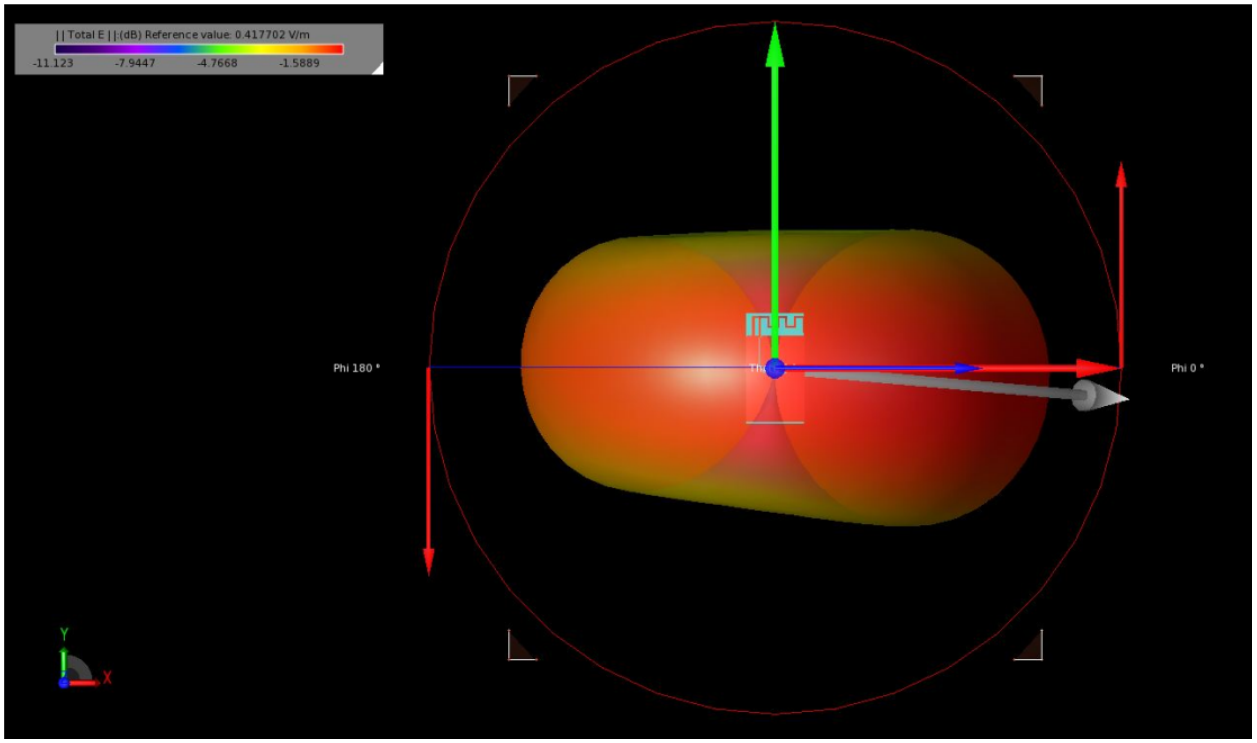

3D radiation pilot PCB antenna XY Orientation (Simulation)

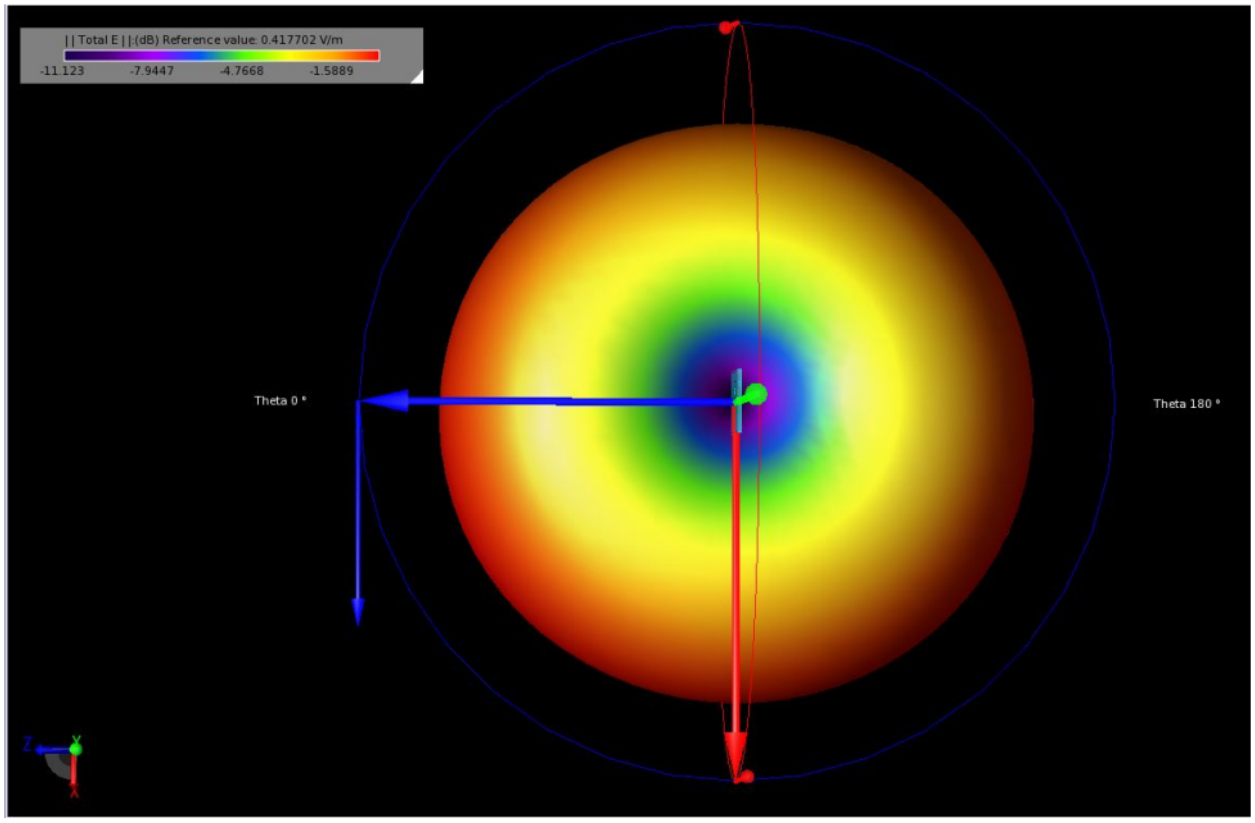

3D radiation pilot PCB antenna XZ Orientation (Simulation)

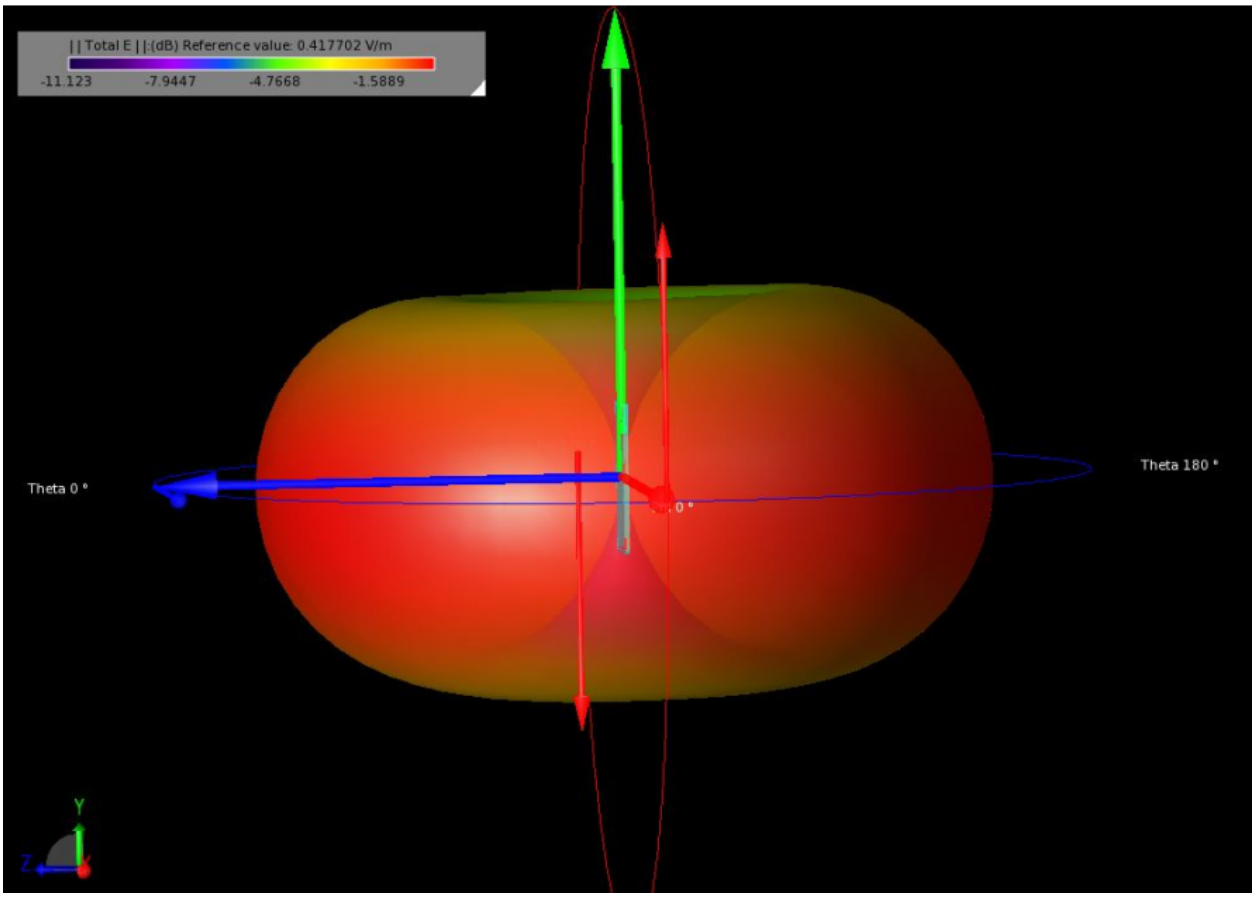

3D radiation pilot PCB antenna YZ Orientation (Simulation)

A5. Manufacturing

5.1. Reflow Profile

For reflow soldering, it is recommended to follow the reflow profile in figure 6 as a guide, as well as the paste manufacturer's guidelines on peak flow temperature, soak times, time above liquid and ramp rates.

Profile Feature	Sn-Pb Eutectic Assembly	Pb-Free Assembly
Average Ramp-Up Rate (Ts_{max} to Tp)	3 °C/second max.	3° C/second max.
Preheat – Temperature Min (Ts_{min}) – Temperature Max (Ts_{max}) – Time (ts_{min} to ts_{max})	100 °C 150 °C 60-120 seconds	150 °C 200 °C 60-180 seconds
Time maintained above: – Temperature (T_L) – Time (t_L)	183 °C 60-150 seconds	217 °C 60-150 seconds
Peak/Classification Temperature (Tp)	235℃	245℃
Time within 5 °C of actual Peak Temperature (tp)	10-30 seconds	20-40 seconds
Ramp-Down Rate	6 °C/second max.	6 °C/second max.
Time 25 °C to Peak Temperature	6 minutes max.	8 minutes max.

Note 1: All temperatures refer to topside of the package, measured on the package body surface.

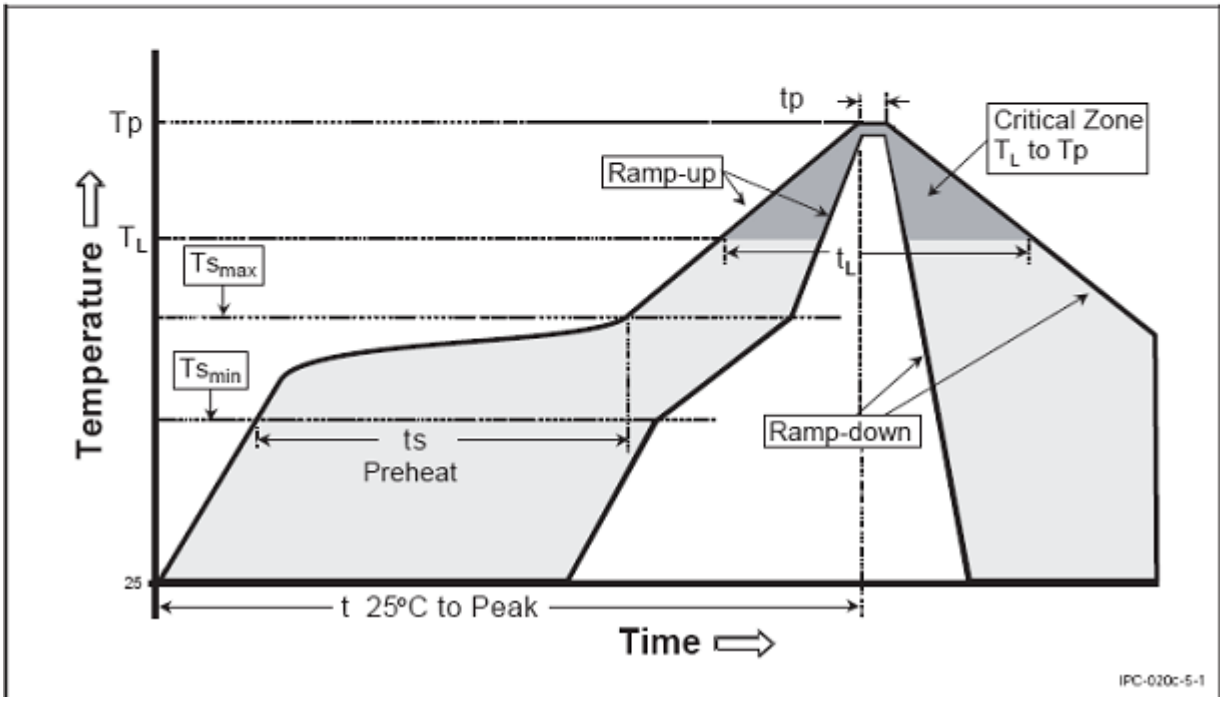

Figure 8 Module Reflow profile reference

A6. Tray Information

All models are packing in one size Tray, the Tray dimension is below.

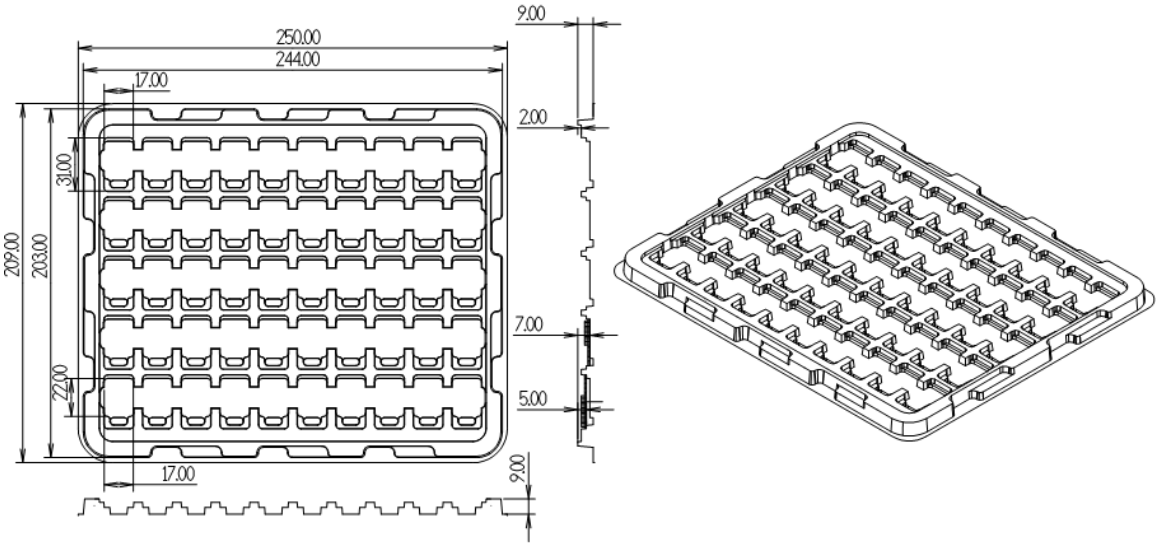

The standard packing is based on 500 pcs, using 11 trays which include cover.
All modules will be packed in a vacuum packing bag which include trays, humidity indicator card, desiccant.

9.1. Net weight and Gross weight

Weight	MSK32W-M10	MSK32W-M13	MSK32W-M16
Net Weight	T.B.D.	T.B.D.	T.B.D.
Gross Weight with Carton	T.B.D.	T.B.D.	T.B.D.
Carton Size	T.B.D.	T.B.D.	T.B.D.

A7. Related Documents

NXP Chip Datasheet
K32W061/41 : https://www.nxp.com/docs/en/data-sheet/K32W061.pdf
QN9090/80 : https://www.nxp.com/docs/en/nxp/data-sheets/QN9090(T)QN9030(T).pdf
JN5189/88: https://www.nxp.com/docs/en/nxp/data-sheets/JN5189.pdf

A8. Label Marking

A9. FCC Statement

This device complies with part 15 of the FCC Rules. Operation is subject to the following two conditions:

(1) This device may not cause harmful interference, and

(2) this device must accept any interference received, including interference that may cause undesired operation.

NOTE: This equipment has been tested and found to comply with the limits for a Class B digital device, pursuant to part 15 of the FCC Rules. These limits are designed to provide reasonable protection against harmful interference in a residential installation.

This equipment generates, uses and can radiate radio frequency energy and, if not installed and used in accordance with the instructions, may cause harmful interference to radio communications. However, there is no guarantee that interference will not occur in a particular installation.

If this equipment does cause harmful interference to radio or television reception, which can be determined by turning the equipment off and on, the user is encouraged to try to correct the interference by one or more of the following measures:

—Reorient or relocate the receiving antenna.

—Increase the separation between the equipment and receiver.

—Connect the equipment into an outlet on a circuit different from that to which the receiver is connected.

—Consult the dealer or an experienced radio/TV technician for help.

Changes or modifications not expressly approved by the party responsible for compliance could void the user's authority to operate the equipment.

If the identification number is not visible when the module is installed inside another device, then the outside of the device into which the module is installed must also display a label referring to the enclosed module, Contains FCC ID: 2AZ3DK32WM10 and 2AZ3DK32WM16.

Co-location of this module with other transmitters that operate simultaneously are required to be evaluated using the multi-transmitter procedures.

The host integrator must follow the integration instructions provided in this document and ensure that the composite-system end product complies with the requirements by a technical assessment or evaluation to the rules and to KDB Publication 996369.

The host integrator installing this module into their product must ensure that the final composite product complies with the requirements by a technical assessment or evaluation to the rules, including the transmitter operation and should refer to guidance in KDB 996369.

This equipment complies with FCC radiation exposure limits set forth for an uncontrolled environment. This equipment should be installed and operated with a minimum distance of 20 cm between the radiator and a human body.

A10. ISED Statement

This device contains licence-exempt transmitter(s) that comply with Innovation, Science and Economic Development Canada's licence-exempt RSS(s). Operation is subject to the following two conditions:

(1) this device may not cause interference,

(2) this device must accept any interference, including interference that may cause undesired operation of the device.

L'émetteur exempt de licence contenu dans le présent appareil est conforme aux CNR d'Innovation, Sciences et Développement économique Canada applicables aux appareils radio exempts de licence. L'exploitation est autorisée aux deux conditions suivantes :

(1) L'appareil ne doit pas produire de brouillage;

(2) L'appareil doit accepter tout brouillage radioélectrique subi, même si le brouillage est susceptible d'en compromettre le fonctionnement.

If the identification number is not visible when the module is installed inside another device, then the outside of th edevice into which the module is installed must also display a label referring to the enclosed module, Contains IC: 27325-K32WM10 and 27325-K32WM16.

Si le numéro d'identification n'est pas visible lorsque le module est installé à l'intérieur d'un autre appareil, alors l' extérieur de l'appareil dans lequel le module est installé doit également afficher une étiquette faisant référence au module joint, Contient IC: 27325K32WM10 et 27325K32WM16.

A11. High Power Module usage limitation

A12. European R & TTE Directive 1999/5/EC Statement

A13. RoHS Compliance

MSK32W-Mxx modules meet the requirements of Directive 2002/95/EC of the European Parliament and of the Council on the Restriction of Hazardous Substance (RoHS).

Status Information

Disclaimers

The contents of this document are subject to change without notice. Meshreen reserves the right to make changes, without notice, in the products, including circuits and/or software, described or contained therein. Information contained in this document regarding device applications and the like is intended through suggestion only and may be superseded by updates. It is your responsibility to ensure that your application meets with your specifications. Meshreen warrants performance of its hardware products to the specifications applicable at the time of sale in accordance with Meshreen standard warranty. Testing and other quality control techniques are used to the extent MESHREEN deems necessary to support this warranty. Except where mandatory by government requirements, testing of all parameters of each product is not necessarily performed. MESHREEN assumes no responsibility or liability for the use of any of these products, conveys no license or title under any patent, copyright, or masks work right to these products, and makes no representations or warranties that these products are free from patent, copyright, or mask work infringement, unless otherwise specified. MESHREEN products are not intended for use in life support systems, appliances or systems where malfunction of these products can reasonably be expected to result in personal injury, death or severe property or environmental damage. MESHREEN customers using or selling these products for use in such applications do so at their own risk and agree to fully indemnify MESHREEN for any damages resulting from such use. All products are sold subject to MESHREEN's terms and conditions of sale supplied at the time of order acknowledgment.

TradeMarks

All trademarks are the property of their respective owners.

Version Control

Version	Date	Notes
1.0	2021.06.02	1st Issue

Contact Details

Meshreen Inc.
Email: info@meshreen.com
http://meshreen.com