HYSNOX Helmet Bluetooth Intercom Headset

Model：HY-01

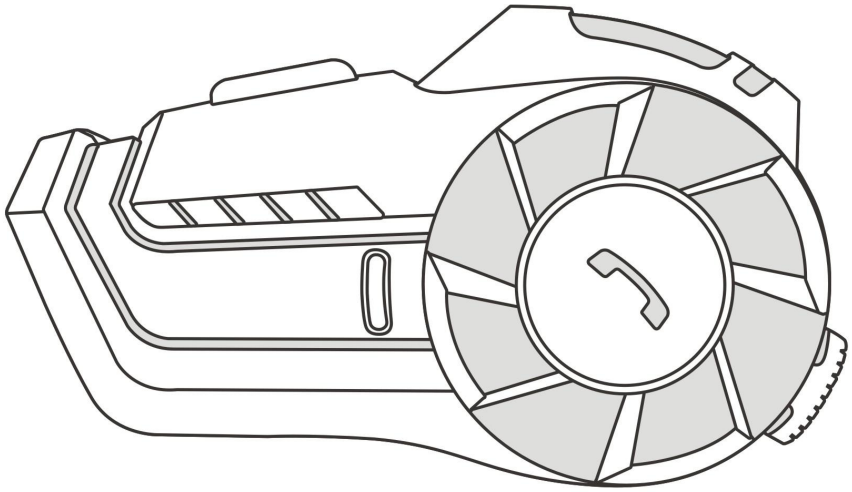

HY-01 bluetooth headset intercom

Table of Contents

1.Introduction.....1
1.1 Product Descriptions.....1
1.2 Main Functions.....2
2.Package Contents.....3
3.Installation Procedure.....4
3.1 Installation method with plastic clamp.....4
3.2 Installation method with velcro clamp.....5
3.3Use a screw plug for the headphone cable.....5
4.Quickly remove Bluetooth headset.....6
5.Functions and operation of buttons.....6
5.1 Turning on/off the unit.....6
5.2 Phone Controls.....7
5.3 Music Controls.....8
5.4 To Start FM radio.....8
5.5 Start/End the Bluetooth Intercom.....8
5.6 To Adjust the Volume.....9
5.7 Switching mode.....9
6.Pairing method.....10
6.1 Pairing with mobile phone.....10
6.2 Pairing between two headsets.....10
6.3 Pairing between three headsets.....11
7.Function priority.....12
8.Technical parameters of product.....12
9.Battery and charging instructions.....13
10.Matters needing attention.....14
Warranty Service.....

1. Introduction

1.1 Product introduction

HY-01 is a full-duplex intercom Bluetooth headset for motorcycle riders with the design that enables clear and safe wireless communication during riding. Compatible with all Bluetooth mobile phones and any type of helmet, our products paired with the mobile phones to allow the riders to receive and unplug calls, listen to music, listen to FM radio and receive GPS navigation voice prompts, etc., at the same time, two or three sets of network intercom call.

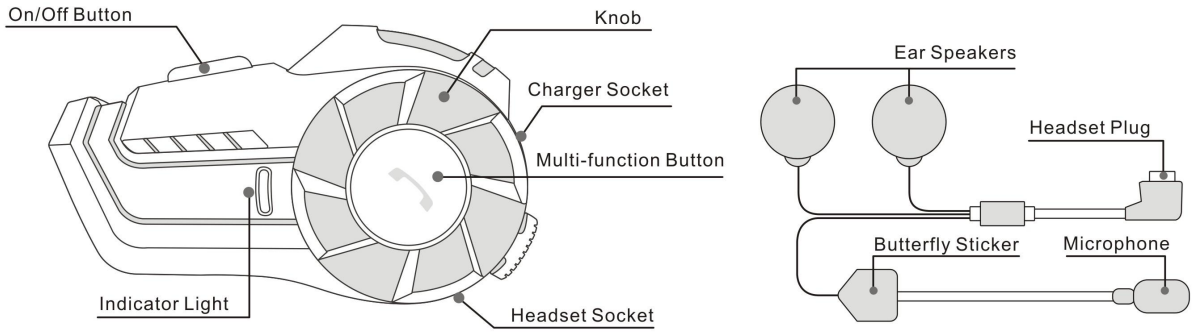

1.On/Off Button
2.Knob
3.Charger Socket
4.Multi-function Button
5.Headset Socket
6. Indicator Light
7.Ear Speakers
8.Headset Plug
9.Microphone
10.Butterfly Sticker

1.2 Main Functions

(1) After paired with a mobile phone, our products can answer incoming calls, reject calls or hang up calls within a visible range of 10 meters;

(2) Our products can maintain the full-duplex intercom between the helmet Bluetooth headsets at a distance of up to 1000 meters. When the intercom is enabled, the mobile phone is still in the standby state with the highest priority to ensure that no calls are missed;

(3) Our products have the function of answering calls automatically and support last code redial;

(4) Our products support FM radio function;

(5) Our products use the knob to control the previous song and the next song of the mobile phone music, and the multi-function keys control playback and pause;

(6) Our products can realize automatic switching between mobile phone calls, intercom calls, stereo music and FM radio;

(7) Our products use DSP to eliminate noise (wind noise) to ensure clear voice quality during high-speed driving;

(8) The waterproof and sunscreen design of the whole machine is durable, and the waterproof grade reaches IP66.

2. Package Contents

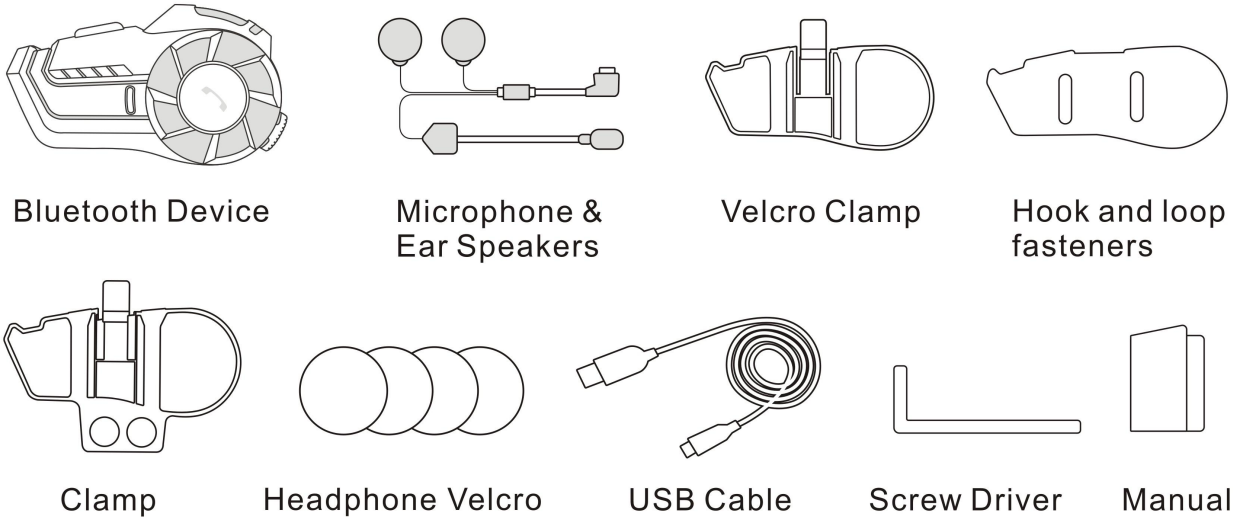

1. Bluetooth Device
2. Microphone&Ear Speakers
3. Velcro Clamp
4. Hook and loop fasteners
5. Clamp
6. Headphone Velcro
7. USB Cable
8. Screw Driver
9. Manual

3. Installation Procedure

3.1 Installation method with plastic clamp

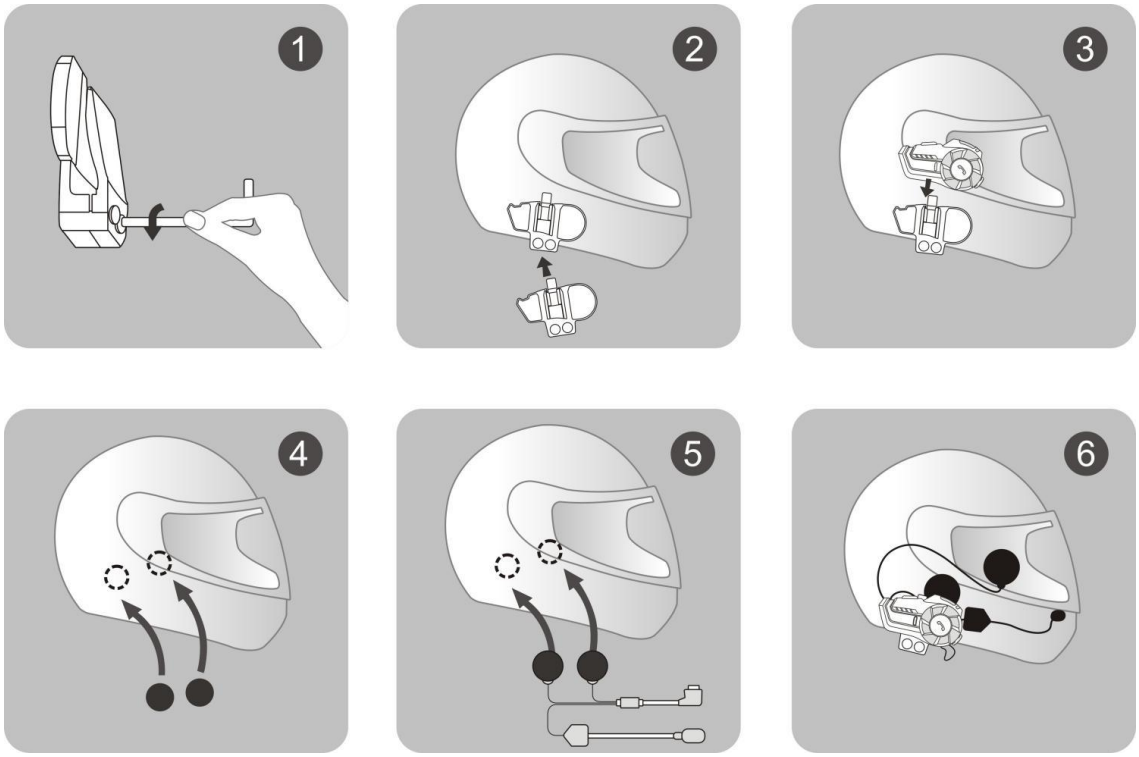

①Loosen the screws on the back of clamp with the provided screw driver.
②Open the lining of helmet,insert the clamp in the proper position on the left of helmet and fasten the screw(overly fastened screw can damage the clamp)
③Slide the receiver down into the slots on the headset clamp mount.Make sure that it is locked in securely.
④Open the lining of helmet(at ear 's position),clean the EPS surface and affix the Velcro on with the rough surface.
⑤Affix the hook surface of earphone to the rough surface of Velcro and properly tidy the helmet lining.
⑥Insert the headphone plug into the corresponding headphone jack on the receiver to finish the installation.

3.2 Installation method with velcro clamp

You can directly use the Velcro to mount the bluetooth device on the edge of helmet. See the following pictures.
①Tear off the white paper on velcro and stick the velcro onto clamp&helmet
②Stick the clamp with velcro onto helmet
③Slide the receiver down into the slots on the headset clamp mount.Make sure that it is locked in securely.

3.3Use a screw plug for the headphone cable

Put the earphone cord plug buckle on, then put in two screws, tighten the plug with a screwdriver; if you want to pull out the earphone plug， first unscrew the screw with a wrench to remove the buckle, and then pull out the earphone; Do not Pull out the headset directly with brute force.

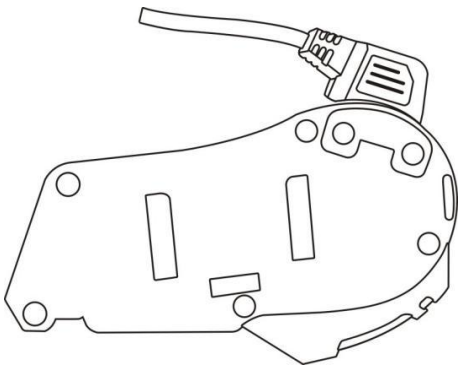

4. Quickly remove Bluetooth headset

①Remove the headphone
②Remove the device from clamp(along the arrow direction in fingure)
③Remove the clamp from helmet(along the arrow direction in fingure)

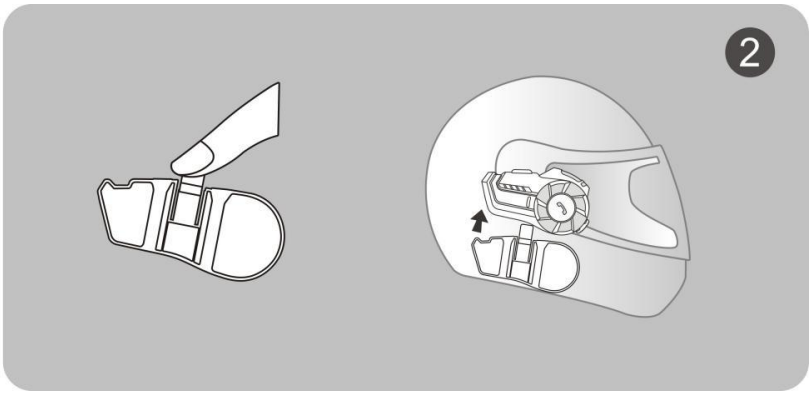

5.Functions and operation of buttons

5.1 Turning on / off the unit

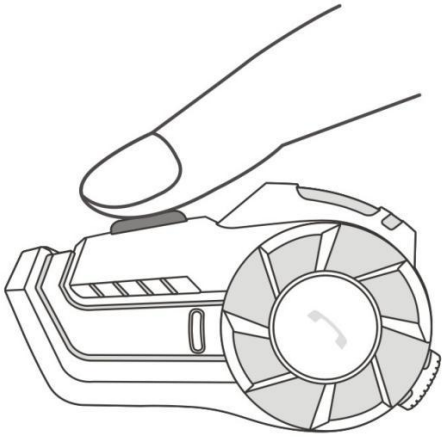

On:Press the On/Off Button for 3 seconds until you hear a "Di".The blue light will flash 3 times swiftly and then turn into regular intervals.
Off:Press the On/Off Button for 5 seconds until you hear a "Di".The blue light will be on for a while and then die out.

5.2 Phone Controls

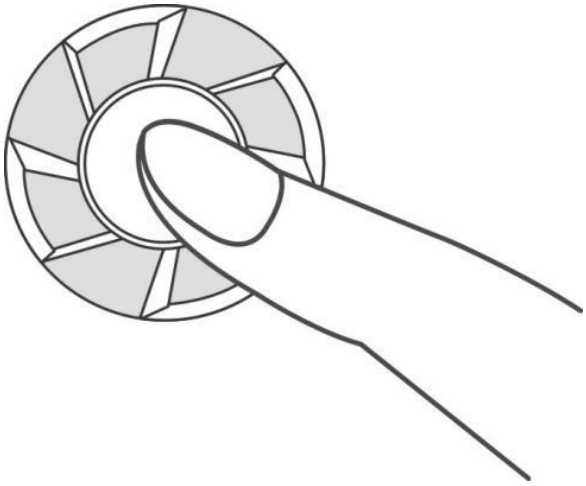

①To answer a call – Briefly press the Multi-function button once.
②Auto receive call – Dependant on the phone the unit will automatically answer the call after 15 seconds of ringing.
③To reject a call – Press the Multi-function button and hold until you hear a “Du” (around 3 seconds).
④To end a call – Whilst call is active Briefly press the Multi-function button once.
⑤Last number redial – When in standby mode. Press and hold the Multi-function button for 2 seconds until you hear a “Du”.

Note: Depending on the phone some or all of these functions may not work, or operate differently.

FC CE RoHS

Made in china

Warranty Service

Warranty Service: 2 years

This card is a product warranty card, please keep it properly; Please attach a receipt to the warranty card to prove the date of purchase.

合 格 证

Certificate

Model:_____

Inspector:_____

Date of manufacture:___

Date of purchase：_____

Customer Name: _____

Customer Phone: _____

Customer Address: _____

Please fill in the product failure description so that we can deal with it in time.

Hysnox

5.3 Music Controls

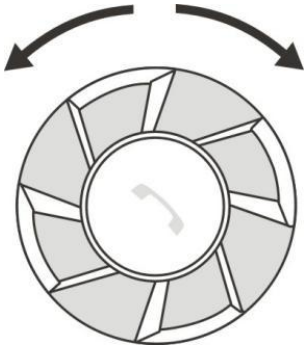

①Play / Pause – Briefly press the Multi-function button once.
②Next Track – Turn the knob counterclockwise to select the next music.
③Previous Track – Turn the knob clockwise to go back to the previous music.

5.4 To Start FM radio

①After turn the unit on, double press the Multi-function button to start FM radio.When there is no call or intercom.
②Slowly turn the knob counterclockwise and clockwise to adjust the station.
③When FM radio is on, double press the Multi-function button to stop FM radio.
Note: In order to make FM radio the best effect, you should pay attention to the following instruction:
a:The line of earphone is unfolded.
b:Try to listen to the FM radio outside or near the window.

5.5 Start/End the Bluetooth Intercom

Start: When the two paired Bluetooth intercom headsets are in standby mode,Briefly press the On/Off button on either one of the two paired devices and a voice prompt will be heard after completing the intercom connection.
End: Briefly press the On/Off button and intercom closes after a "Di" prompt tone

5.6 To Adjust the Volume

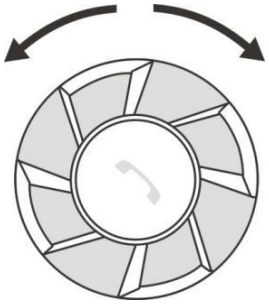

Rotate the knob counterclockwise and hold it down to increase the volume, rotate the knob clockwise and hold it down to decrease the volume, let go when the volume is adjusted to the right level, and you can hear a "thump" sound when you adjust the volume. Highest or lowest volume.

Note: Depending on the phone some or all of these functions may not work, or operate differently.

5.7 Switching mode

①Switch Between Intercom and Music/FM Radio:When in intercom mode,Briefly press the Multi-function button and a “Di” prompt tone can be heard.After,switching between music and FM radio, please refer to “②”.

②Switch Between Music and FM Radio: Double press the Multi-function button to FM Radio. When listening to the FM Radio, double press the Multi-function button to exit FM Radio, then Briefly press theMulti-function button once time to music.

③**A**. If the intercom headset is also connected to the mobile phone, when there is a phone call, the intercom will automatically disconnect, switch to the mobile phone headset to answer the call, and automatically resume the intercom state after the call ends;

B. The operation needs to be effective within a limited distance;

C. It takes about 5 seconds to switch back from the mobile phone call state to the Bluetooth intercom state.

6.Pairing method

6.1 Pairing with mobile phone

①Ensure the Bluetooth intercom headset is off and within 1m visible range of the mobile phone to be paired.
②Press down device On/Off button for 8 seconds until you see the red light and blue light flash alternatively, it means device enter pairing status.
③Open the Bluetooth function on your mobile phone.
④Bluetooth on your phone will search the device until you see Hysnox .
⑤Click Hysnox on your phone,when you see the blue light flashes regularly,it means pairing is successful.(Already paired successfully, you can connect to Bluetooth in standby mode next time)

6.2 Pairing between two headsets

①Ensure both devices are off and within 1m visible range of each other.Press down both devices On/Off button for 8 seconds until you see the red light and blue light flash alternatively,both devices enter pairing status.
②Quickly press the On/Off button on either two devices.Then it will search for the other devices for pairing.When the blue light flashes regularly it means pairing is successful.
③At the same time, long press the power button of the two helmet Bluetooth headsets for 8 seconds to enter the pairing mode (red and blue lights flash alternately); short press the power button of any one of the two helmet Bluetooth headsets, the headset will automatically search for nearby helmet Bluetooth Pair the headset device.
④When paired, you do not need to go into pairing mode again. In future you only need to go into standby mode (blue light flashing) on both units and press the button on one of the devices.

Note: When 2 bluetooth devices need to pair for intercom, also need to connect mobile phone, you should following the instruction:

a: Firstly, two bluetooth devices need to pair for intercom successfully,(see the above instruction), then turn off the two bluetooth devices.

b: Turn on one of bluetooth devices, also turn on the mobile phone bluetooth, let the mobile phone connect the bluetooth device successfully.

c: Turn on the other bluetooth device, next you only need to press the bluetooth device (any one of two is OK) power/intercom button, the two bluetooth devices can intercom now.

6.3 Pairing between three headsets

①Firstly,pair two devices A and B as described above.

②Secondly,turn off A and B,pair A and C as described of **6.2**.

③Thirdly,turn off C and A,pair B and C as described of **6.2**.

④At last turn on A.

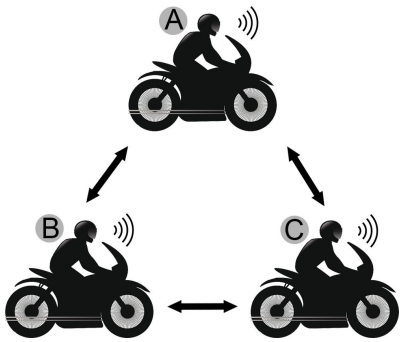

⑤Pressing the On/Off button of A 1 time to call C and 2 times to call B;

Pressing the On/Off button of B 1 time to call C and 2 times to call A;

Pressing the On/Off button of C 1 time to call B and 2 times to call A.

Note: When two devices are on intercom, you must first press the On/Off button 1 time to exit the intercom, and then switch to another intercom according to the above operation.

7.Function priority

Level 1: Phone

Level 2: Bluetooth intercom

Level 3: Music/FM radio

8.Technical parameters of product

Working distance：1000 meters
Frequency：2.4GHz
Supports： A2DP and AVRCP
Supported Bluetooth Profiles： Bluetooth headset and hands free profiles with automatic detection
Operating Range： Up to 10m for cellphones
Battery Type： Rechargeable lithium polymer 600mAh
Stand by：Up to 300 hours
Talking Time： Mobile phone talk/listen to music up to 14 hours; intercom up to 12 hours.
Charging Time：About 2.5 hours
Power Adaptor：DC5V 1A (Optional)
Charging interface：TYPE-C interface
Working temperature： 41F-104F (5℃-40℃)
Storage temperature： -4F-122F (-20℃~50℃)

9.Battery and charging instructions

Before using this device, Please charge the headset with charger. Please ensure that the battery is fully recharged when you first time use it.We have provided you with the ability to charge the system via the USB port of your computer or if you are away on a trip, you can use Multi-voltage USB power adapter.

The charging cable has a small USB plug for the headset and the large USB plug for the computer or AC adapter; please observe to correct orientation of the USB plug and socket before inserting

1) Insert the USB plug of the charging cable, into the USB small jack of the headset; you can either charging by computer or AC adapter.

2) While charging, the red LED on the headset module will flash slowly;When fully charged, the red light will remain on. A normal charge from a low battery will take about 2.5 hours.

Note: if you do not use the headset for a month or more, to protect the Poly-Li battery, please charge the headset at least every month. (The fault damaged by wrong charging will be not guaranteed.

10.Note

①If you don't use the headset for one month or more, in order to protect the headset lithium battery, please charge the headset once every two months (the damage caused by incorrect charging will not be guaranteed);
②The suitable storage temperature of this product is -20℃ to 50℃, please do not store in an environment with too high or too low temperature, otherwise it will affect the service life of the product;
③Do not expose this product to open flames to avoid explosion;
④ The two screws of the earphone jack plug buckle can be opened and tightened by oneself, and the earphone is fixed. The screws of other mainframes cannot be opened by oneself, so as to avoid the motherboard short circuit or the loosening of other lines of the battery, which will affect the normal use.

FCC Requirement

Any changes or modifications not expressly approved by the party responsible for compliance could void the user's authority to operate the equipment.

This device complies with Part 15 of the FCC Rules. Operation is subject to the following two conditions:

(1) this device may not cause harmful interference, and

(2) this device must accept any interference received, including interference that may cause undesired operation.

Note: This equipment has been tested and found to comply with the limits for a Class B digital device, pursuant to Part 15 of the FCC Rules. These limits are designed to provide reasonable protection against harmful interference in a residential installation. This equipment generates, uses, and can radiate radio frequency energy, and if not installed and used in accordance with the instructions, may cause harmful interference to radio communications. However, there is no guarantee that interference will not occur in a particular installation. If this equipment does cause harmful interference to radio or television reception, which can be determined by turning the equipment off and on, the user is encouraged to try to correct the interference by one or more of the following measures:

– Reorient or relocate the receiving antenna.

– Increase the separation between the equipment and receiver.

– Connect the equipment into an outlet on a circuit different from that to which the receiver is connected.

– Consult the dealer or an experienced radio/TV technician for help.