SWAN-K1

快速入门指南

Quick Start Guide

V2.1 2021.6

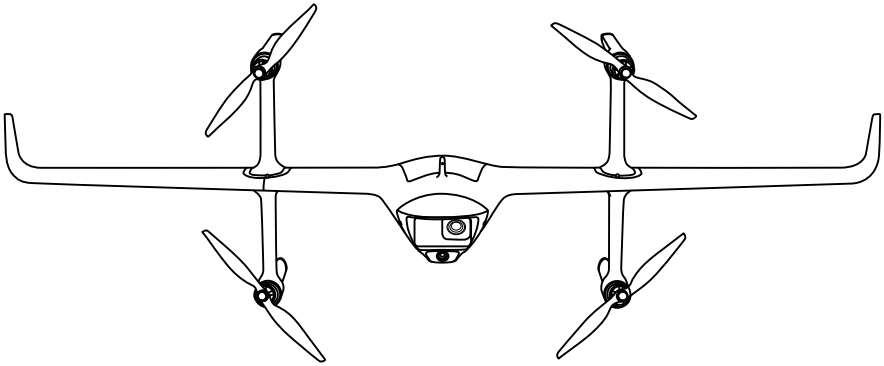

HEQ

1 充电 / Charging the Battery and Remote

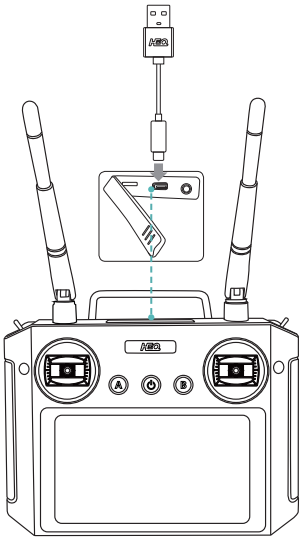

请用type-C数据线连接您的充电头给遥控器充电。
Please connect your charger with a type-C data cable to charge the remote control.

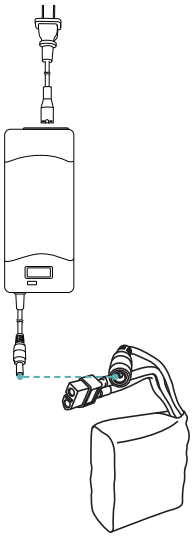

请用充电器给电池充电。
Please charge the battery with the charger.

---

2 组装飞行器 / Assemble the drone

组装机臂 / Assemble the arm

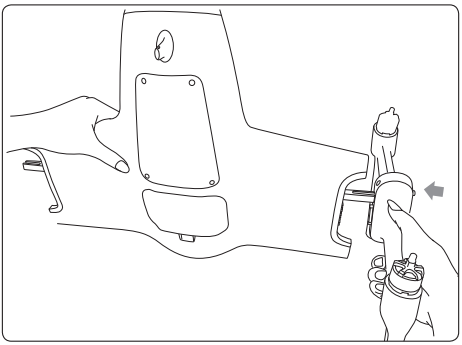

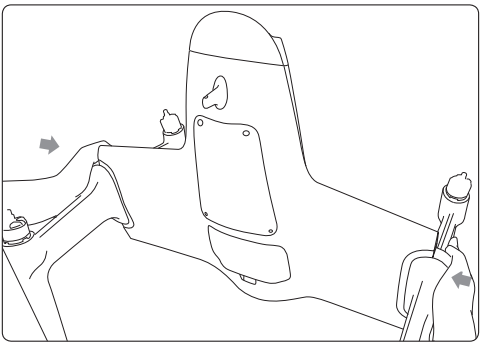

组装机翼 / Assemble the wing

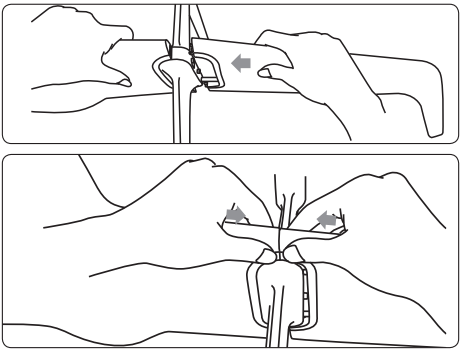

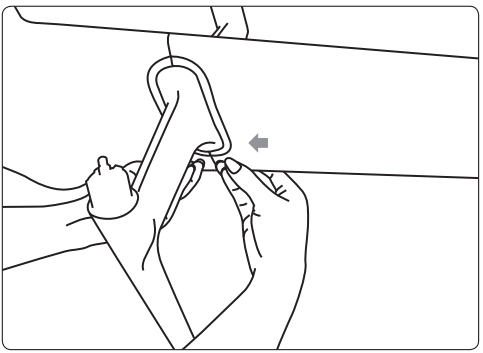

3 安装螺旋桨 / Attaching the Propellers

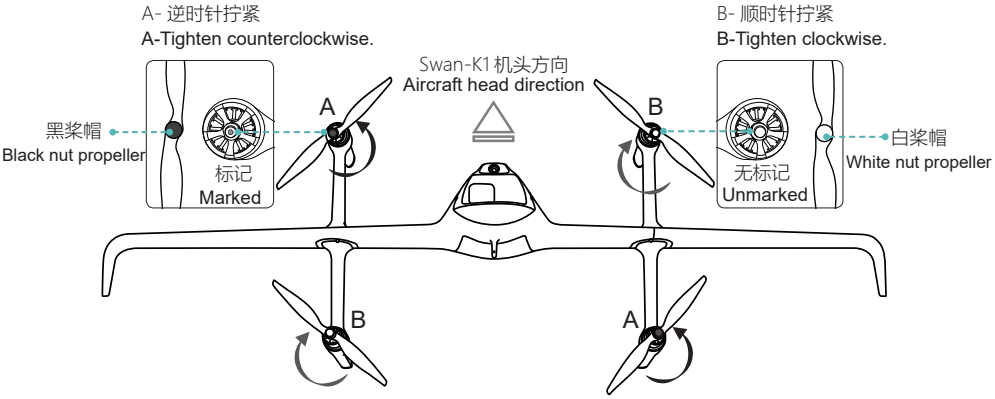

4 开启与关闭遥控器，安装飞行器电池 / Open and close the remote control,Install the battery

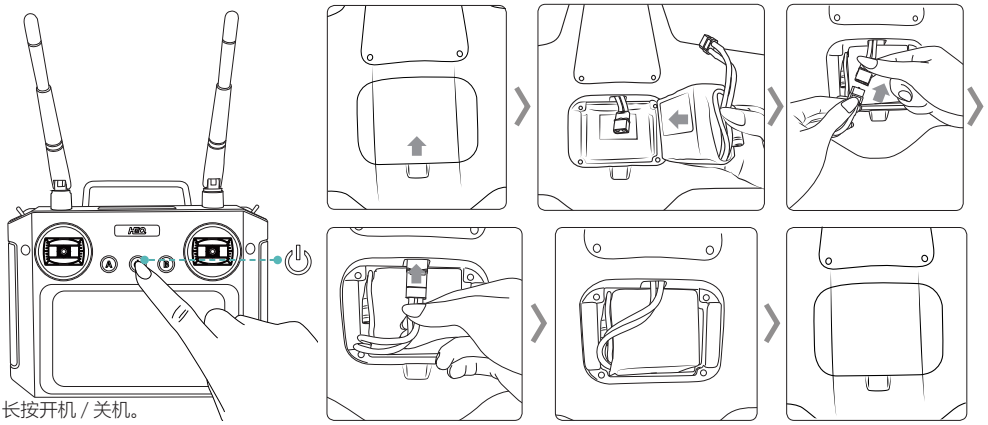

5 遥控器 / Remote Controller

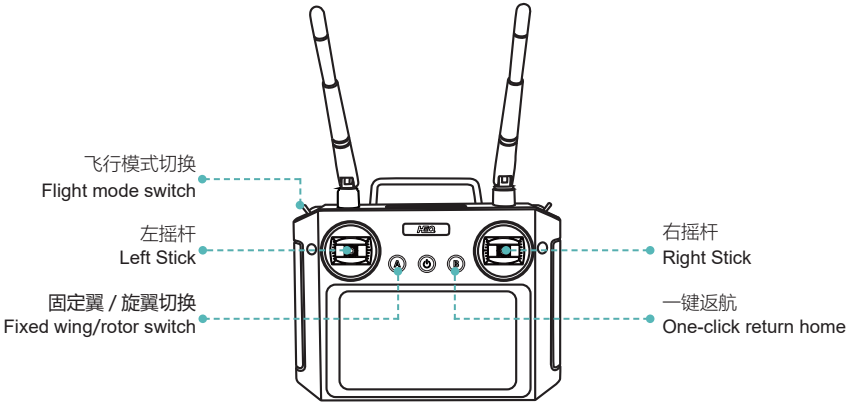

6 摇杆操控飞行器 / Controlling the drone

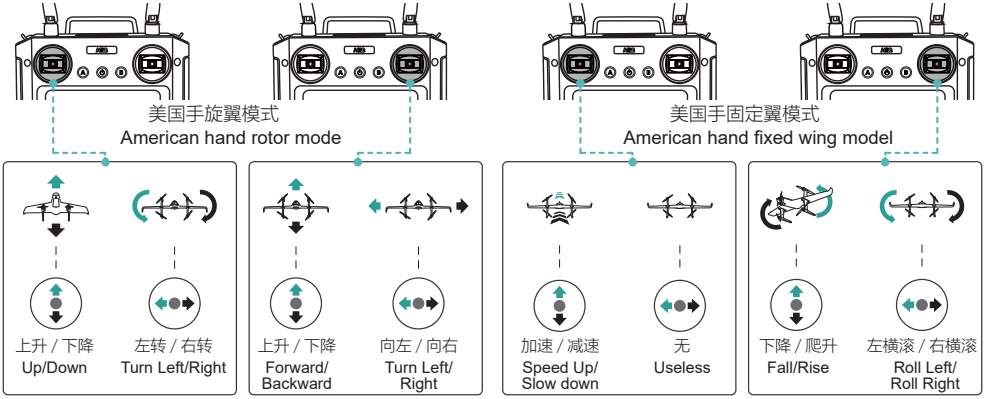

7 位置模式 / Enter position mode

在户外空旷环境，遥控器向左拨杆等待飞行器进入位置模式。

In an open outdoor environment, move the remote control to the left and wait for the aircraft to enter the position mode.

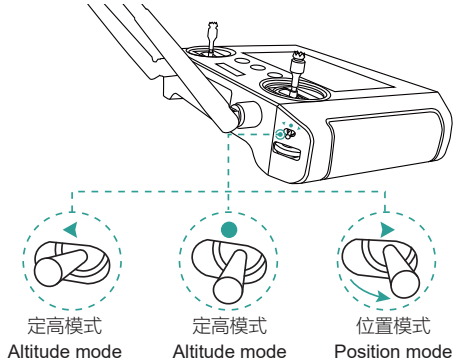

8 起飞前校准 / Calibrate

飞行前请校准空速计和磁罗盘。

Please calibrate the airspeed meter and compass before flying.

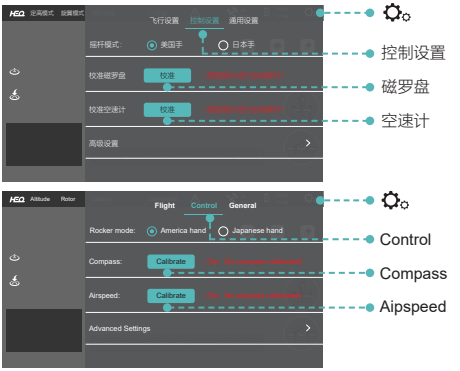

9 如何解锁（美国手）/ How to unlock(US hand)

进入位置模式后，油门杆最低，航向杆最右解锁飞行器。电机转动后，请马上松开摇杆。

After entering the position mode, the throttle stick is the lowest and the heading stick is the rightmost to unlock the aircraft. After the motor rotates, please release the joystick immediately.

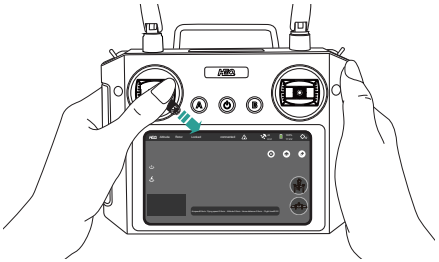

10 起飞与降落，固定翼 / 旋翼切换 / Take off and landing,Fixed wing/rotor switch

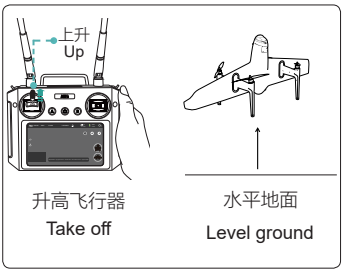

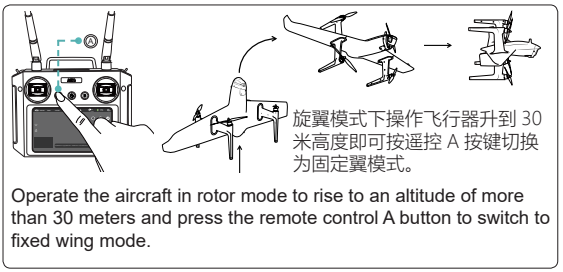

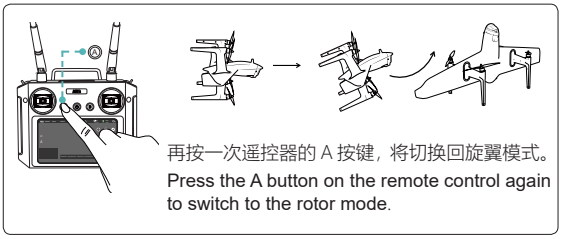

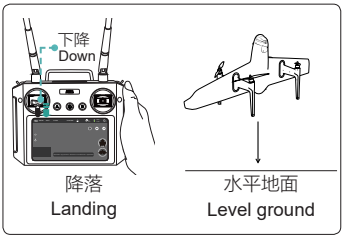

11 如何上锁（美国手）/ How to lock (US hands)

飞行器降落在平地之后，将油门杆打到最低并保持几秒后电机停转。

After the aircraft lands on flat ground, hit the throttle stick to the lowest position and hold it for a few seconds before the motor stops.

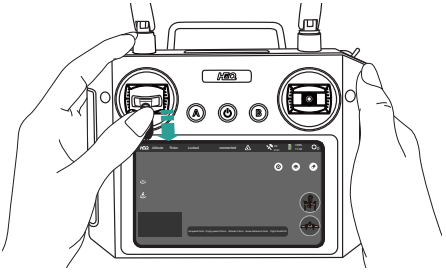

12 断开电源 / Disconnect the power

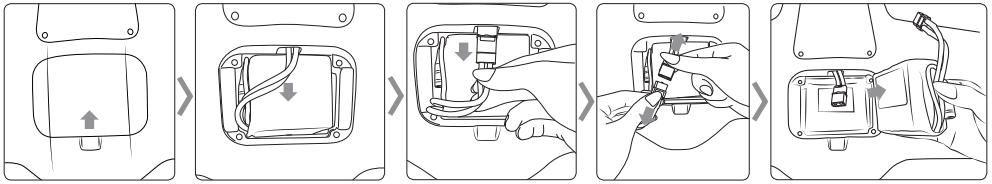

FCC Warning
15.19 Labeling requirements.
This device complies with part 15 of the FCC Rules. Operation is subject to the following two conditions: (1) This device may not cause harmful interference, and (2) this device must accept any interference received, including interference that may cause undesired operation.
15.21 Information to user.
Any Changes or modifications not expressly approved by the party responsible for compliance could void the user's authority to operate the equipment.

This Transmitter must not be co-located or operating in conjunction with any other antenna or transmitter.
This equipment complies with RF radiation exposure limits set forth for an uncontrolled environment.
This equipment should be operated with minimum distance 20cm from the body.

IC Warning
This device complies with Industry Canada's licence-exempt RSSs. Operation is subject to the following two conditions:
(1)This device may not cause interference;
(2)This device must accept any interference, including interference that may cause undesired operation of the device.

Le présent appareil est conforme aux CNR d'Industrie Canada applicables aux appareils radio exempts de licence. L'exploitation est autorisée aux deux conditions suivantes:
(1) l'appareil ne doit pas produire de brouillage, et (2) l'utilisateur de l'appareil doit accepter tout brouillage radioélectrique subi, même si le brouillage est susceptible d'en compromettre le fonctionnement.

This equipment should be operated with minimum distance 20cm from the body.

CE Warning
1. Risk of explosion if battery is replaced by an incorrect type. Dispose of used batteries according to the instructions.
2. The operating temperature of the device can't exceed 40℃ and shouldn't be lower than -15℃ .
3. The device complies with RF specifications when the device used at 20cm from the body.
Hereby, Shenzhen HEQ Intelligent Technology Co. LTD. declares that this product is in compliance with essential requirements and other relevant provisions of Directive 2014/53/EU. This product is allowed to be used in all EU member states.

This content is subject to change.

Download the latest version from
http:// www. hequavtech.com
Copyright©2021 HEQ All Rights Reserved.