SWAN VOYAGER

Quick Start Guide
快速入门指南

V1.1 2022.11

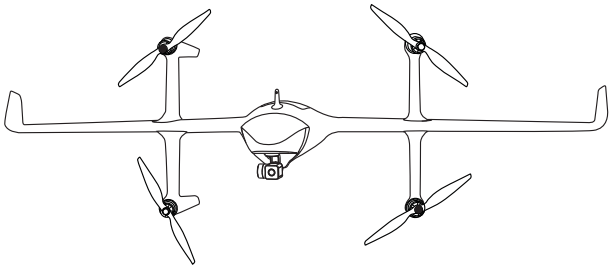

Charge

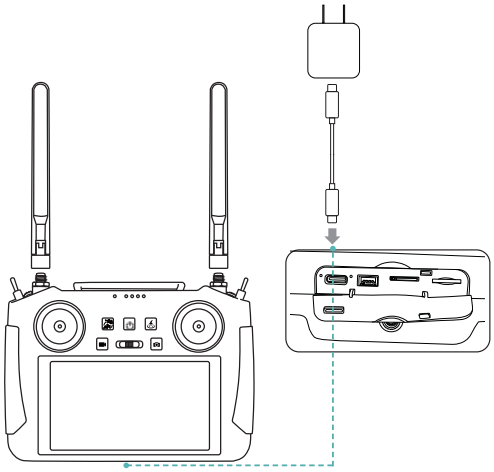

Please make sure that the remote control is turned off and charged with the original charge .

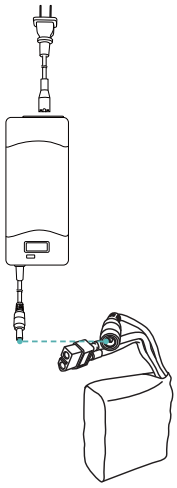

Please use the original charger when charging the battery.

Configuration list

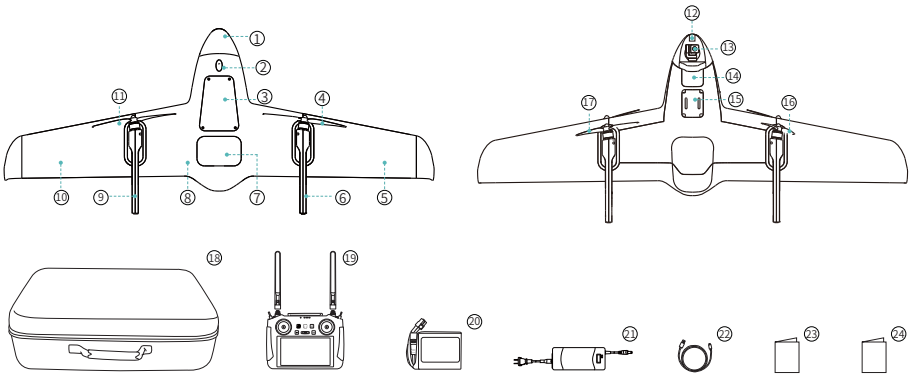

1. Nose cowl
2. Airspeed meter
3. Avionics cover
4. Propeller (Black nut propeller)
5. Right wing
6. Right arm
7. Battery cover
8. Drone body
9. Left arm
10. Left wing
11. Propeller (White nut propeller)
12. SD card slot
13. 3-axis gimbal camera
14. Camera cover
15. Image transmission cover
16. Propeller (Black nut propeller)
17. Propeller (White nut propeller)
18. Portable carrying case
19. Highlight screen remote control
20. 4S Li-polymer battery
21. Battery charger
22. Type-C charging cable for remote
23. Quick start guide
24. Disclaimer

Assembling the drone

Assemble the arms

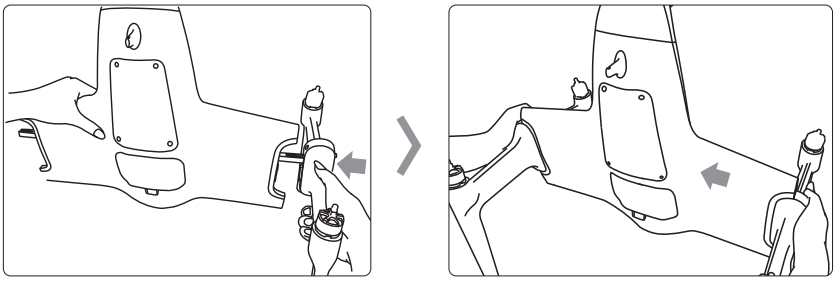

Assemble the wings

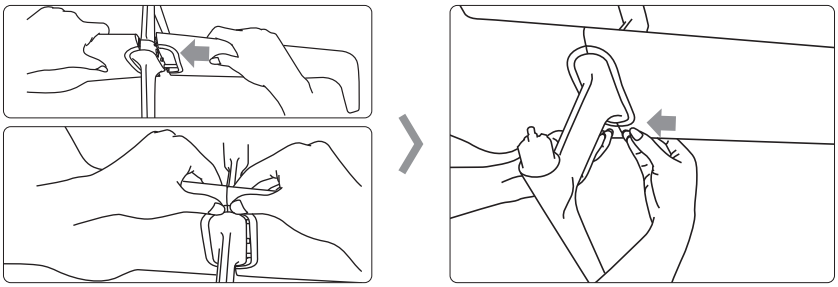

Installing the propellers

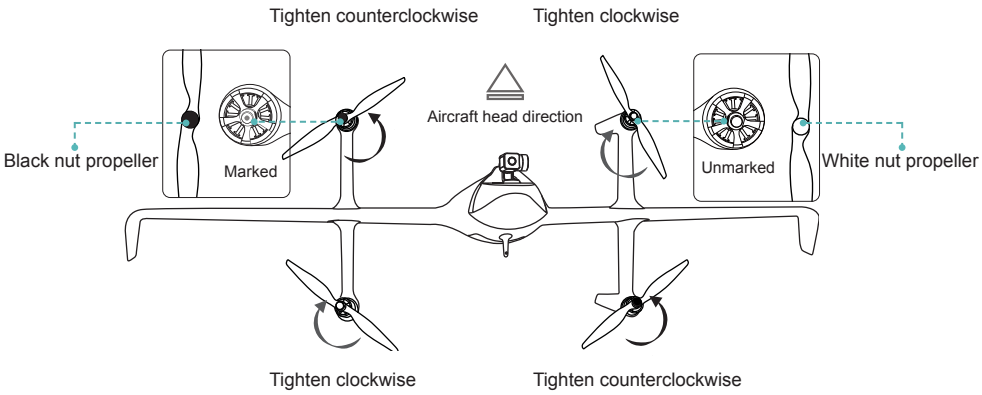

Installing the antennas

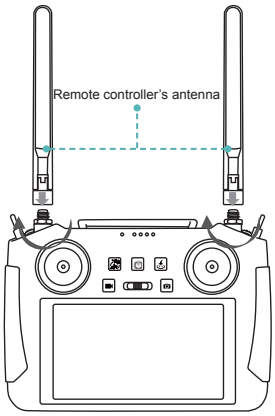

Note: Install the antenna according to the direction of the arrow, then turn on the control.

Turning on the control / Turning off the control

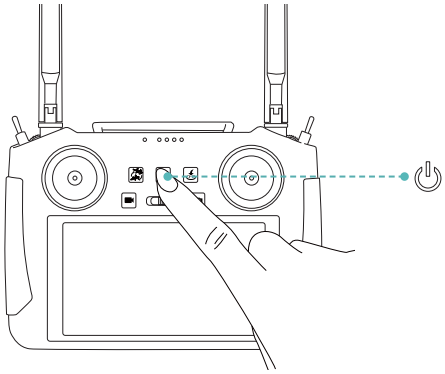

Short press and then long press to turn on the control.

Long press to turn off the control

Installing the battery

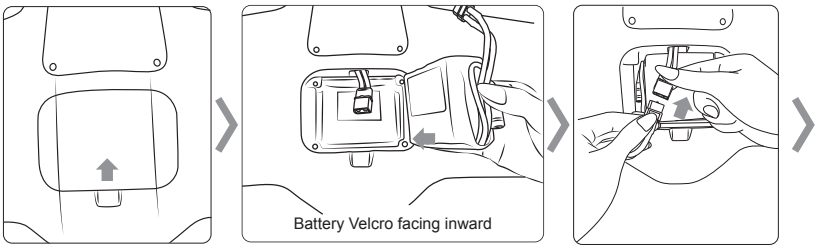

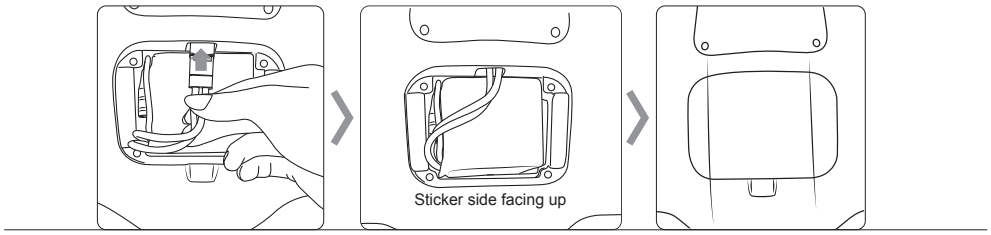

Remote control buttons and APP page

Button introduction

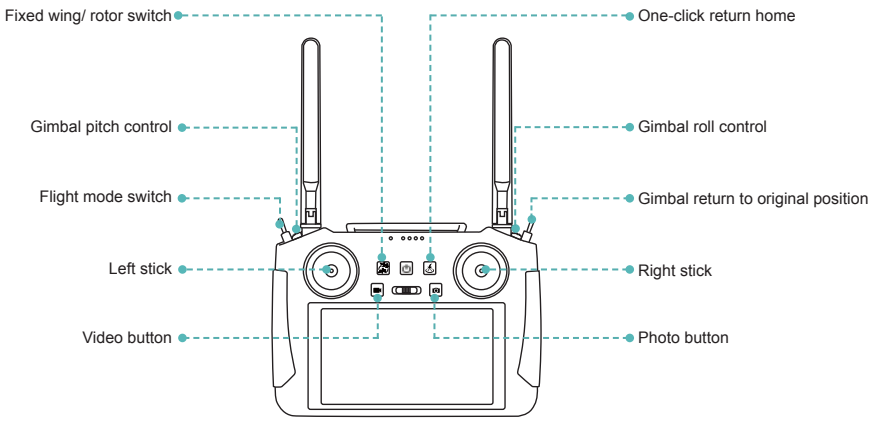

APP screen

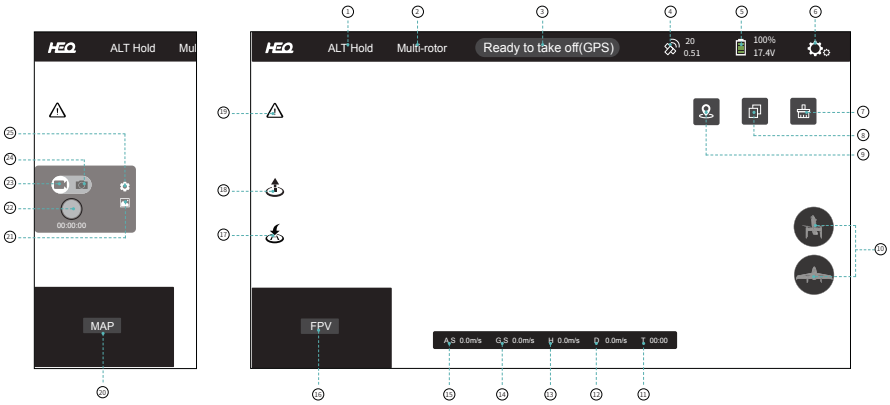

1. Airplane mode
2. Status mode
3. Display of key information
4. GPS quantity and quality
5. Power and voltage display
6. Settings
7. Clear the flight pat
8. Satellite / Street switch
9. Aircraft positioning
10. Attitude ball
11. Flight time
12. Flight distance
13. Flight Height
14. Ground speed
15. Airspeed
16. FPV screen
17. One-key return
18. One key take off
19. Message list
20. Map
21. Image stock
22. Start / End recording
23. Video
24. Photo
25. Set up

How to control the gimbal

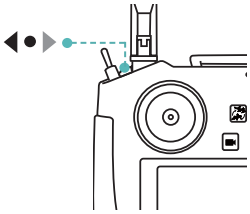	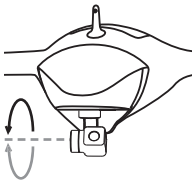	Gimbal pitch control
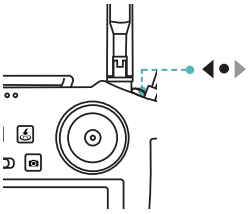		Gimbal roll control
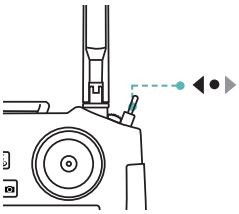	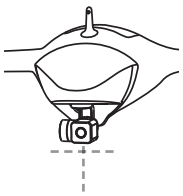	Gimbal returns back to the original position

Entering into position mode

In an open outdoors, turn on the remote control,enter the HEQ FLY, wait for the GPS to search for satellites, and move the flight mode switch lever down to enter the position mode

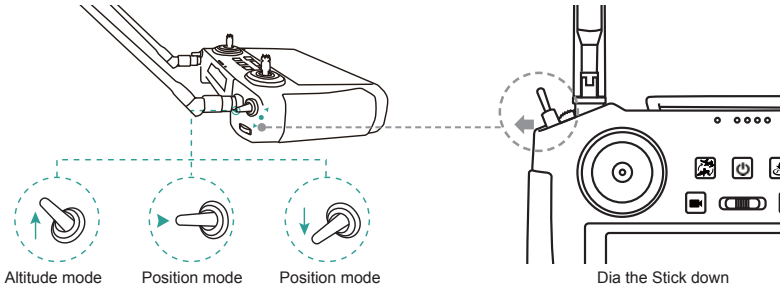

Pre-flight calibration

Please calibrate the airspeed meter and compass before flying

Click to enter into the parameter setting page

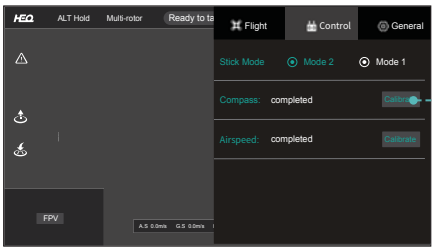

Calibrate the compass

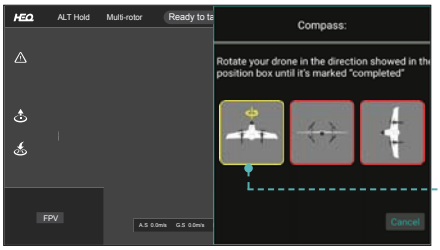

Rotate according to the order

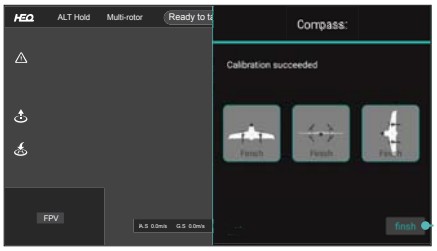

Calibration completed

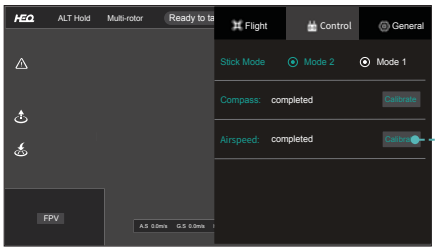

Calibrate Airspeed Meter

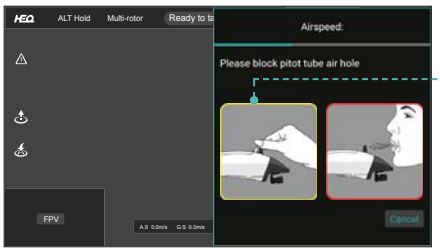

Follow the instructions in a sequence

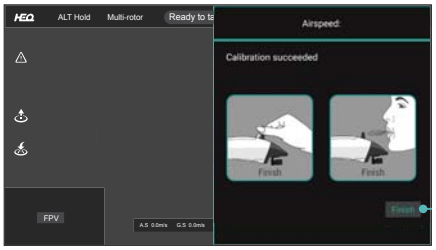

Calibration completed

Joystick control aircraft - US hand (Mode 2)

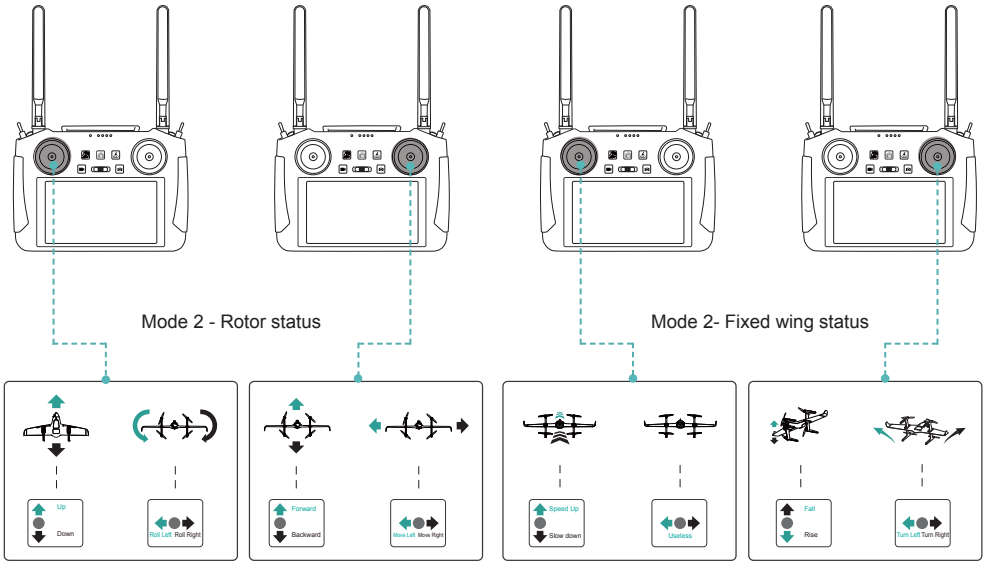

How to unlock (US hand / Mode 2)

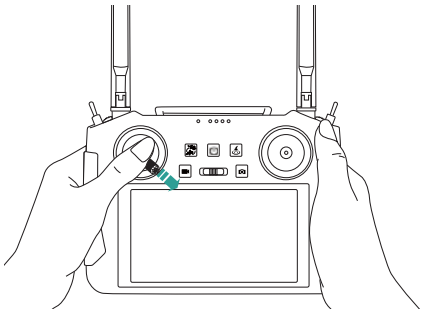

After entering the position mode, move the left stick to the bottom right to unlock the aircraft.
Please release the rocker immediately after the motor turns.

How to lock (US hand / Mode 2)

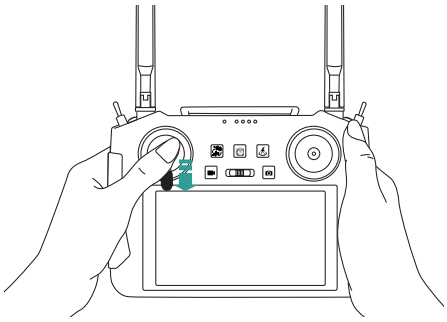

After the aircraft lands on the flat ground, move the left stick right downward and hold it for more than 5 seconds to stop the motors.

Taking off and landin , Fixed wing/rotor switch (US hand / Mode 2)

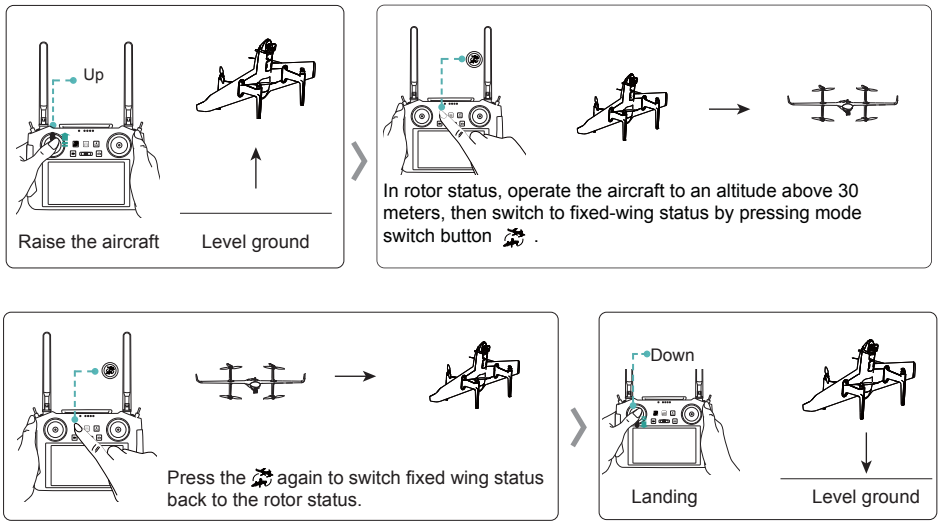

Controlling the drone - Japanese hand (Mode 1)

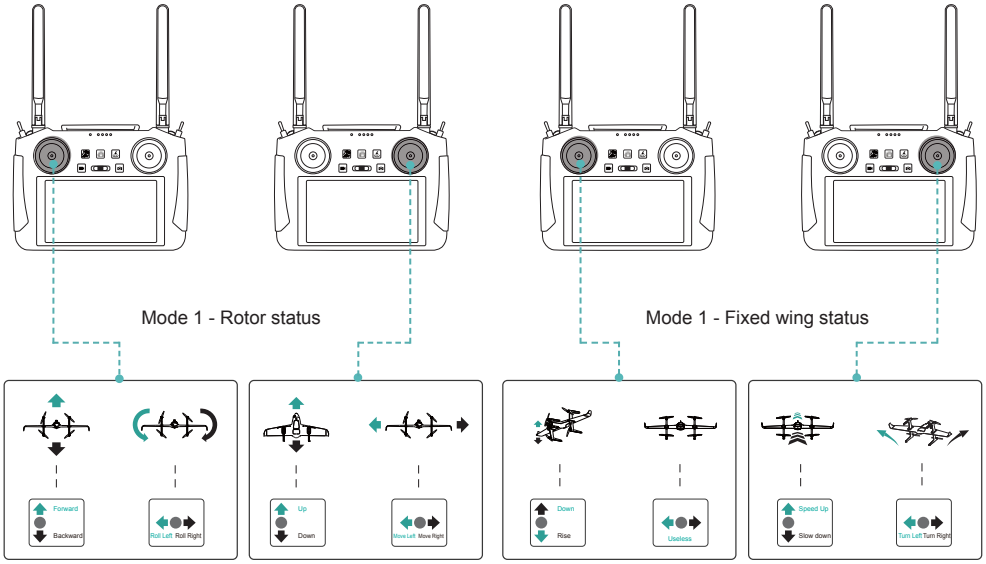

How to unlock(Japanese hand / Mode 1)

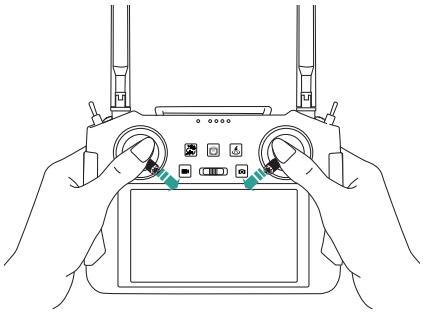

After entering position mode, move the left joystick to the bottom right and simultaneously move the right joystick to the bottom left to unlock the aircraft.
Please release the rocker immediately after the motor turns.

How to lock (Japanese hand/ Mode 1)

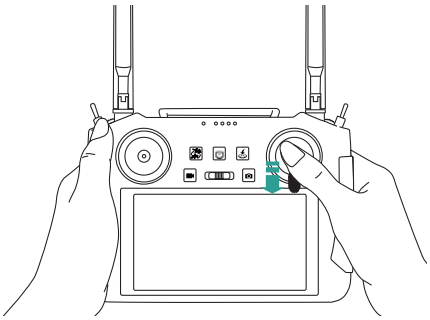

After the aircraft lands on the flat ground, move the right stick right downward and hold it for more than 5 seconds to stop the motors.

Taking off and landin , Fixed wing/rotor switch(Japanese hand/ Mode 1)

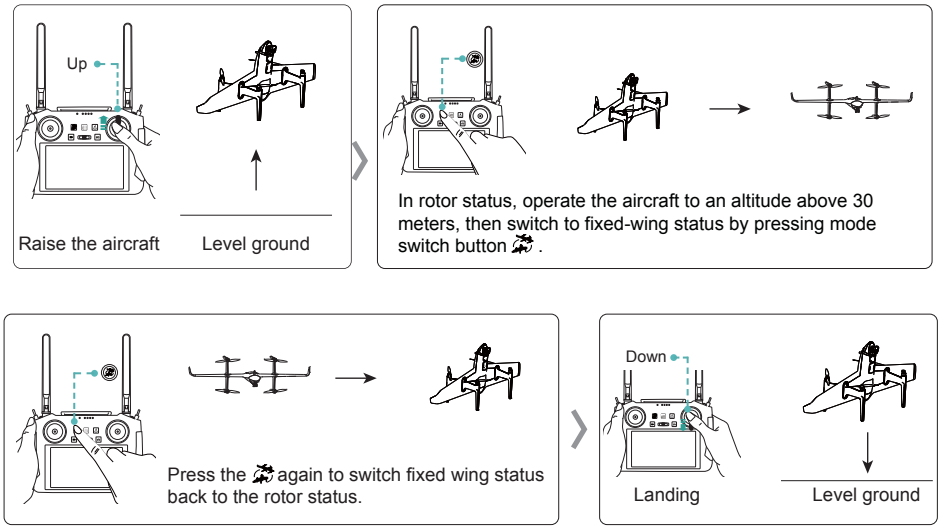

Disconnecting the power

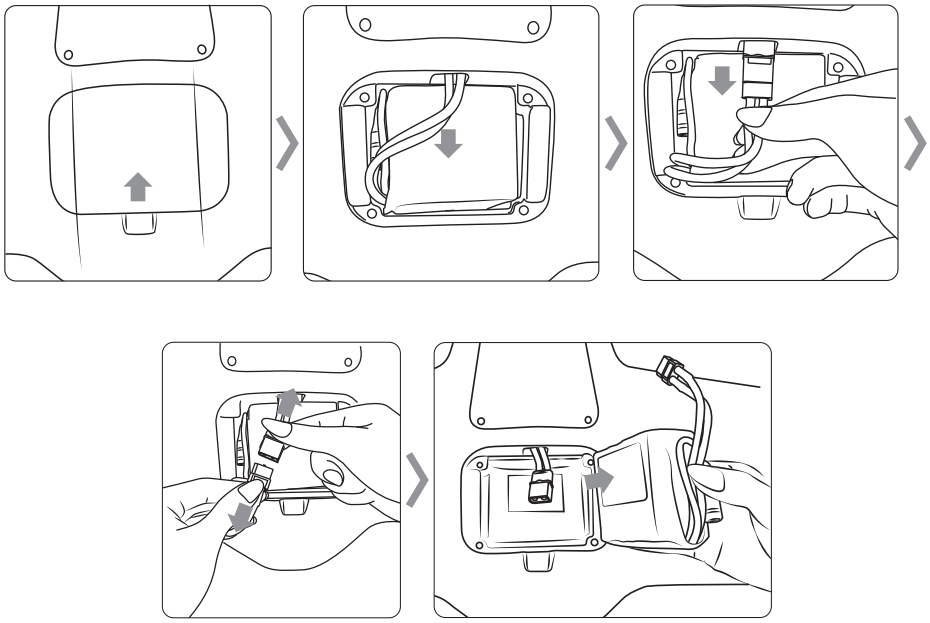

Export photos and videos

Take the cover away on the top of the aircraft head and remove the SD card to copy HD pictures and videos.

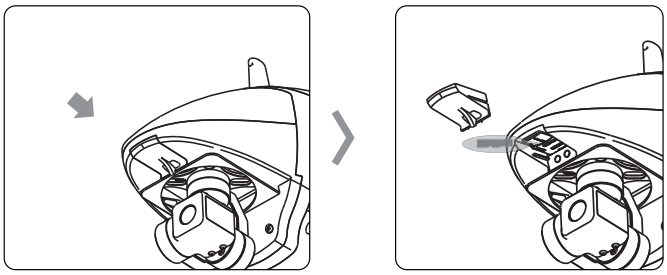

FCC Compliance Notice

This device complies with part 15 of the FCC Rules. Operation is subject to the following two conditions:

(1) This device may not cause harmful interference, and

(2) this device must accept any interference received, including interference that may cause undesired operation.

Any changes or modifications not expressly approved by the party responsible for compliance could void the user's authority to operate the equipment.

This equipment has been tested and found to comply with the limits for a Class B digital device, pursuant to part 15 of the FCC Rules. These limits are designed to provide reasonable protection against harmful interference in a residential installation. This equipment generates, uses and can radiate radio frequency energy and, if not installed and used in accordance with the instructions, may cause harmful interference to radio communications. However, there is no guarantee that interference will not occur in a particular installation. If this equipment does cause harmful interference to radio or television reception, which can be determined by turning the equipment off and on, the user is encouraged to try to correct the interference by one or more of the following measures:

-Reorient or relocate the receiving antenna.

-Increase the separation between the equipment and receiver.

-Connect the equipment into an outlet on a circuit different from that to which the receiver is connected. -Consult the dealer or an experienced radio/TV technician for help.

FCC Radiation Exposure Statement

This equipment complies with FCC radiation exposure limits set forth for an uncontrolled environment . This transmitter must not be co-located or operating in conjunction with any other antenna or transmitter. This equipment should be installed and operated with minimum distance 20cm between the radiator& your body.

ISEDC RSS warning

This device complies with Innovation, Science and Economic Development Canada Compliance licence-exempt RSS standard (s). Operation is subject to the following two conditions: (1) this device may not cause interference, and (2) this device must accept any interference, including interference that may cause undesired operation of the device.

Le présent appareil est conforme aux CNR d'Innovation, Sciences et Développement économique Canada applicables aux appareils radio exempts de licence.

L'exploitation est autorisée aux deux conditions suivantes:

(1) l'appareil ne doit pas produire de brouillage, et

(2) l'utilisateur de l'appareil doit accepter tout brouillage radioélectrique subi, même si le brouillage est susceptible d'en compromettre le fonctionnement.

ISEDC Radiation Exposure Statement:

This equipment complies with ISEDC RF radiation exposure limits set forth for an uncontrolled environment. This transmitter must not be co-located or operating in conjunction with any other antenna or transmitter. This equipment should be installed and operated with minimum distance 20cm between the radiator& your body.

IC exposition aux radiations:

Cet équipement est conforme avec ISEDC les limites d'exposition aux rayonnements définies pour un contrôlé environnement.

Cet émetteur ne doit pas être co-localisés ou fonctionner en conjonction avec une autre antenne ou émetteur.

Cet équipement doit être installé et utilisé avec une distance minimale de 20 cm entre le radiateur et votre corps.

Any changes or modifications not expressly approved by the party responsible for compliance could void the user's authority to operate the equipment.

Tous les changements ou modifications non expressément approuvée par le responsible de la conformité pourrait vider l'utilisateur est habilité à exploiter l'équipemen.

CE Warning

1. Risk of explosion if battery is replaced by an incorrect type. Dispose of used batteries according to the instructions.
2. The operating temperature of the device can't exceed 40℃ and shouldn't be lower than -15℃ .
3. The device complies with RF specifications when the device used at 20cm from the bod .

Hereby,Shenzhen HEQ Intelligent Technology Co.LTD.declares that this product is in compliance with essential requirements and other relevant provisions of Directive 2014/53/EU.This product is allowed to be used in all EU member states.

This content is subject to change.

Download the latest version from
http:// www. hequavtech.com

Copyright©2022 HEQ All Rights Reserved.

充电

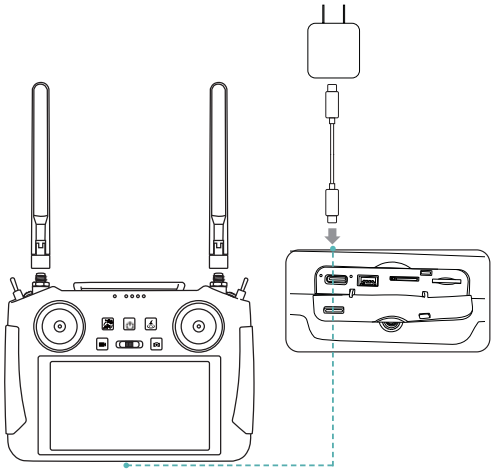

请使用原厂快充充电器给遥控器充电。充电前务必关闭遥控器。

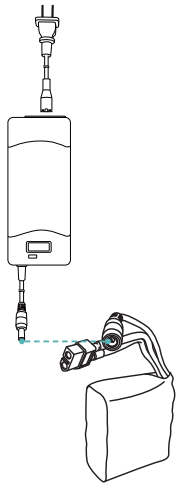

请用充电器给电池充电。

配置清单

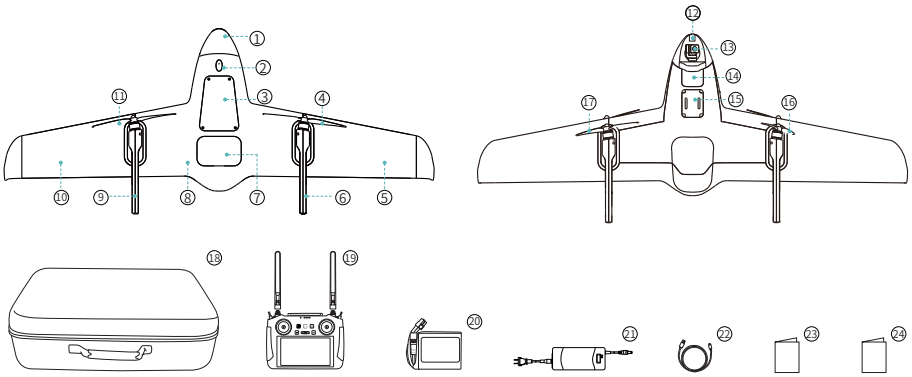

1、主机头罩
2、空速计
3、飞控舱盖
4、螺旋桨（黑桨帽）
5、右机翼
6、右机臂
7、电池舱盖
8、Voyager 主机身
9、左机臂
10、左机翼
11、 螺旋桨（白桨帽）
12、SD 卡卡槽
13、三轴云台相机
14、 摄像头舱盖
15、图传仓盖
16、螺旋桨（黑桨帽）
17、螺旋桨（白桨帽）
18、便携式手提箱
19、高亮屏遥控
20、4S 锂电池
21、电池充电器
22、Type-C 遥控充电线
23、快速入门指南
24、免责声明

组装飞行器

组装机臂

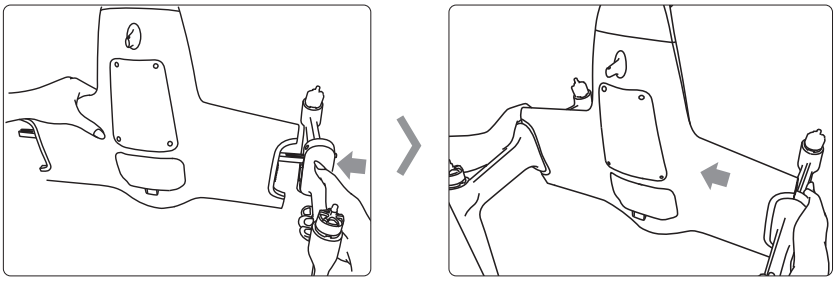

组装机翼

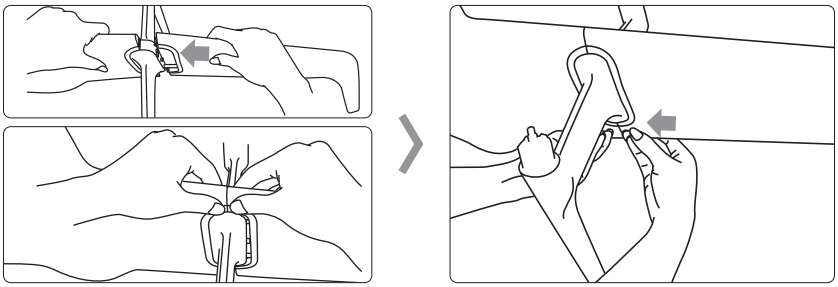

安装螺旋桨

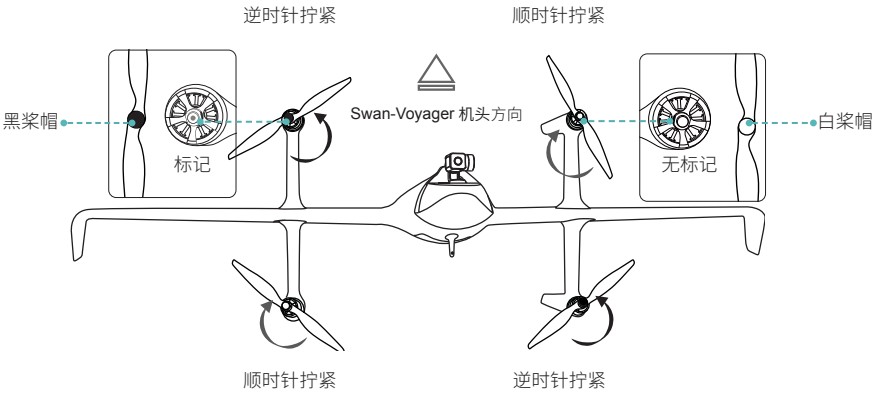

安装天线

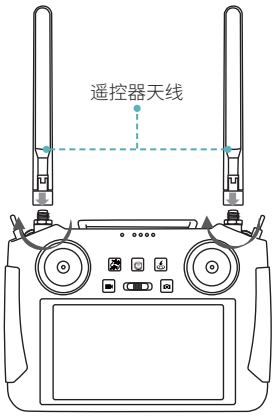

注：开机前，按照箭头指向安装遥控器天线后再通电。

遥控开机 / 关机

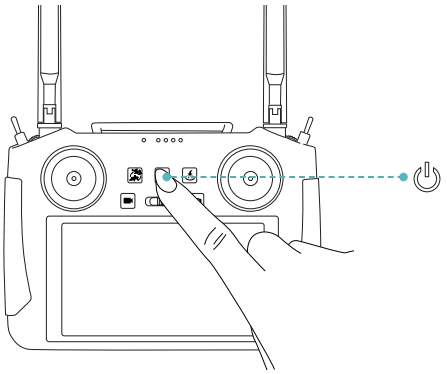

安装飞行器电池

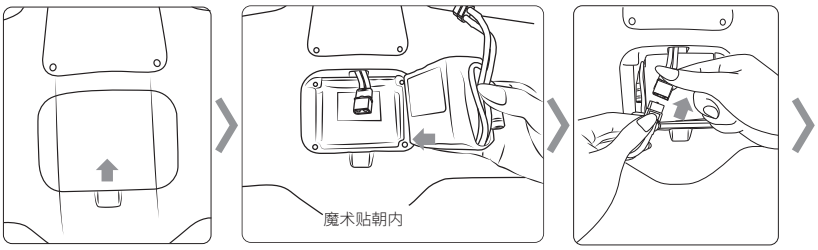

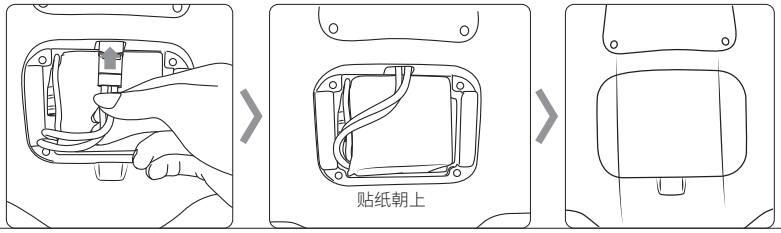

遥控器按键与 APP 画面

按键介绍

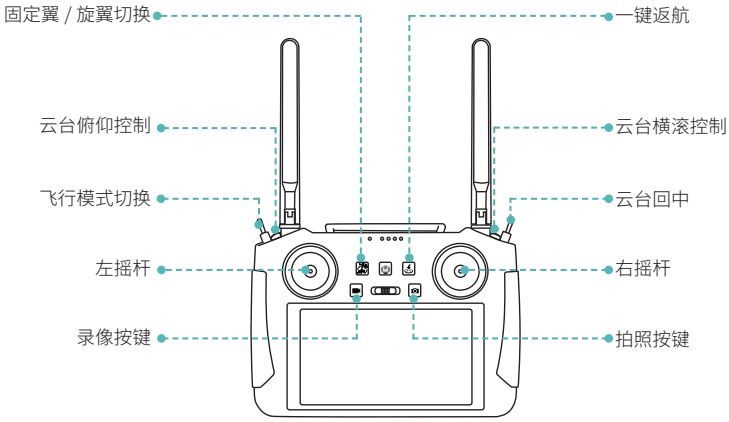

APP 画面

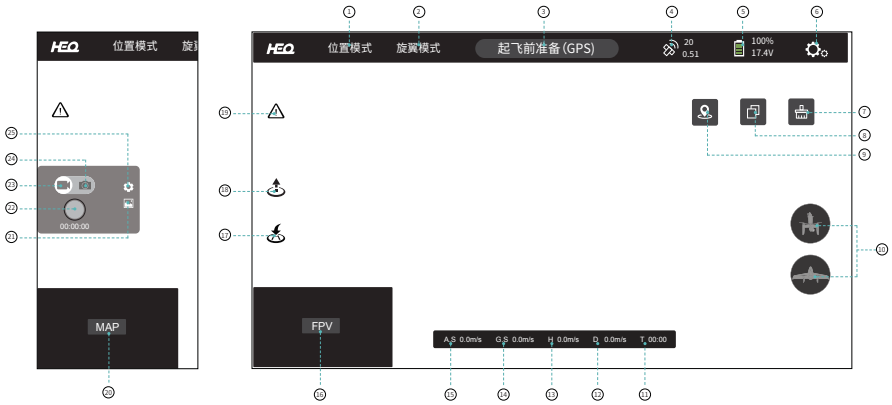

1、飞行模式
2、机型模式
3、关键信息显示
4、GPS 数量与质量
5、电量电压显示
6、设置
7、清除飞行轨迹
8、卫星 / 街道切换
9、飞行器定位
10、姿态球
11、飞行时长
12、离家距离
13、高度
14、地速
15、空速
16、FPV 画面
17、一键返航
18、一键起飞
19、消息列表
20、地图
21、图库
22、开始 / 结束 录制
23、录像
24、拍照
25、设置

如何控制云台

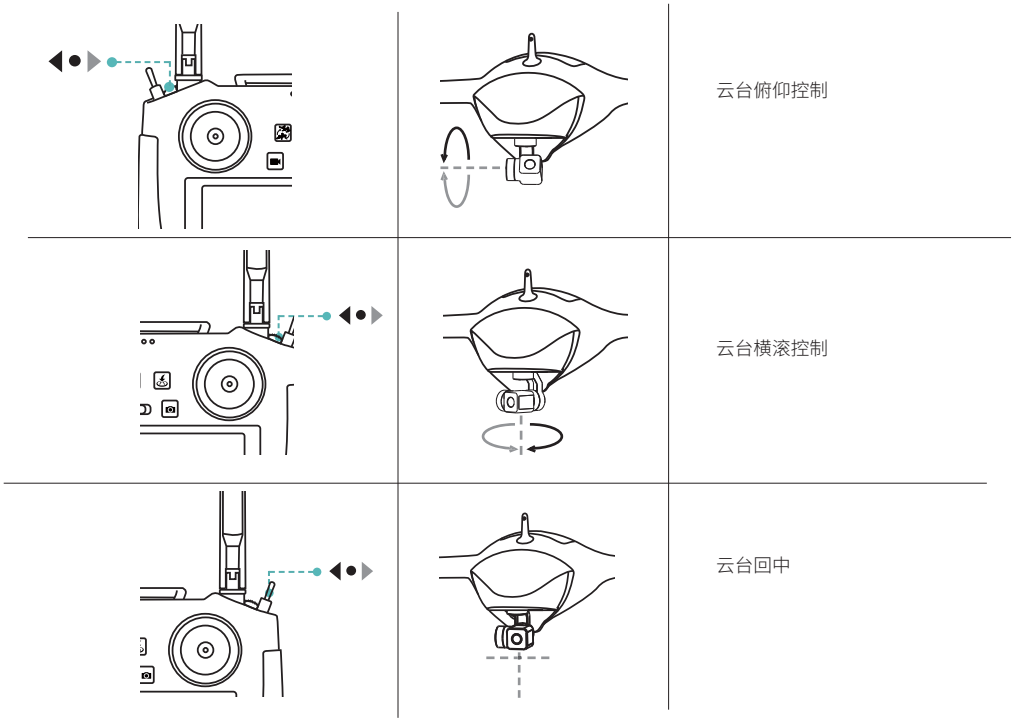

位置模式

在户外空旷环境下，遥控器开机后，进入 HEQ FLY，等待 GPS 搜索卫星，将飞行模式切换拨杆向下拨动，进入位置模式。

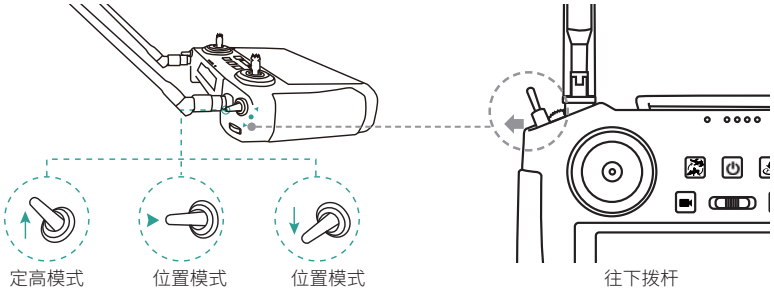

起飞前校准

飞行前请校准磁罗盘和空速计。

进入参数设置页面

校准磁罗盘

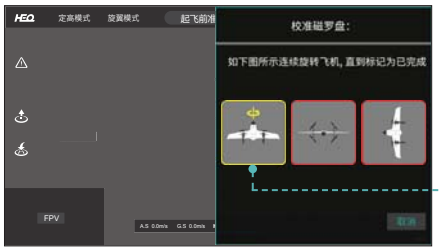

按照指令依次旋转

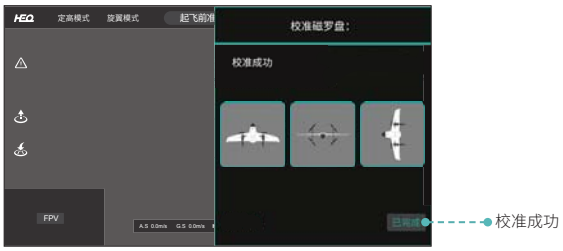
定高模式
旋翼模式
起飞前准
校准磁罗盘:
校准成功
FPV
A.S 0.0m/s G.S 0.0m/s
已完成
校准成功

定高模式
旋翼模式
起飞前准
飞行
控制
通用
摇杆模式
美国手
日本手
校准磁罗盘:
已校准
校准
校准空速计:
已校准
校准
FPV
A.S 0.0m/s G.S 0.0m/s
校准空速计

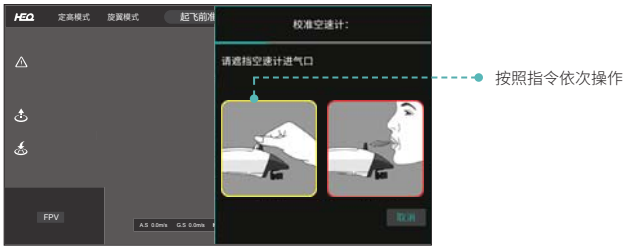
定高模式
旋翼模式
起飞前准
校准空速计:
请遮挡空速计进气口
FPV
A.S 0.0m/s G.S 0.0m/s
取消
按照指令依次操作

定高模式
旋翼模式
起飞前准
校准空速计:
校准成功
FPV
A.S 0.0m/s G.S 0.0m/s
已完成
校准完成

摇杆操控飞行器（美国手）

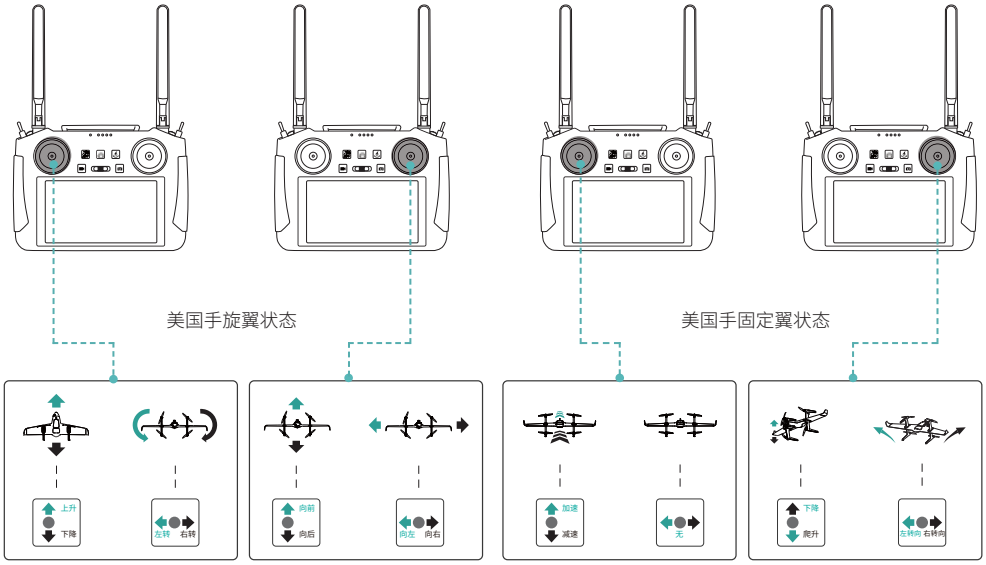

如何解锁（美国手）

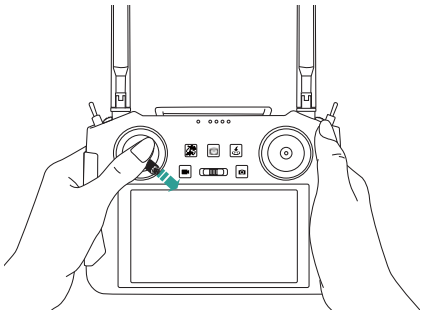

进入位置模式后，向右下方拨动左摇杆，解锁飞行器。电机转动后，请马上松开摇杆。

如何上锁（美国手）

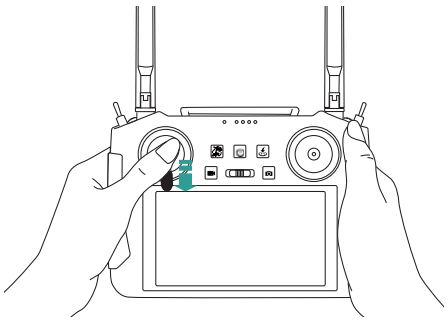

飞行器降落在平地之后，向正下方拨动左摇杆并保持 5 秒以上电机停转。

起飞与降落，固定翼 / 旋翼切换（美国手）

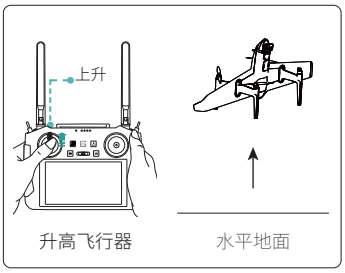

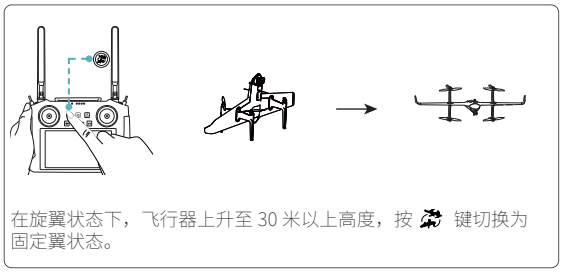

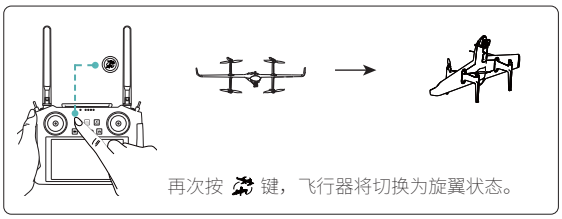

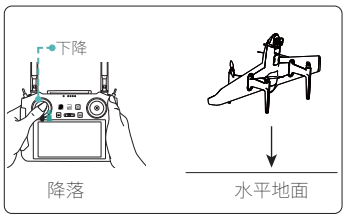

摇杆操控飞行器（日本手）

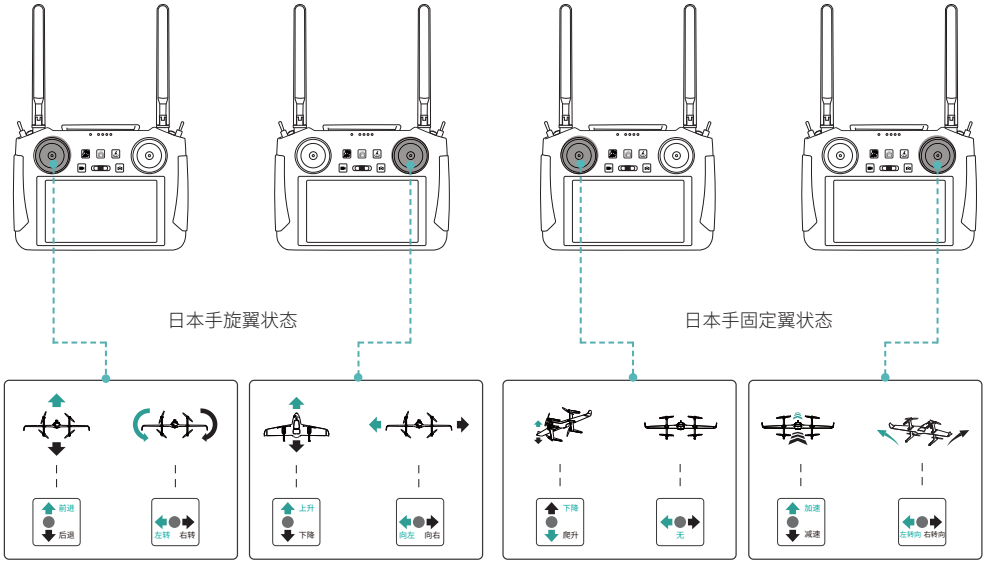

如何解锁（日本手）

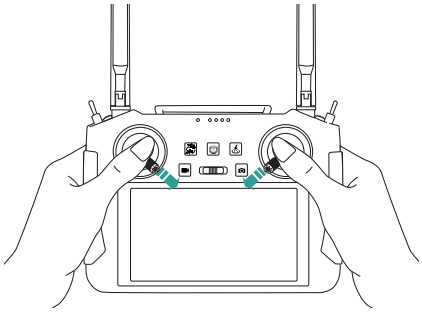

进入位置模式后，向右下方拨动左摇杆的同时向左下方拨动右摇杆，解锁飞行器。
电机转动后，请马上松开摇杆。

如何上锁（日本手）

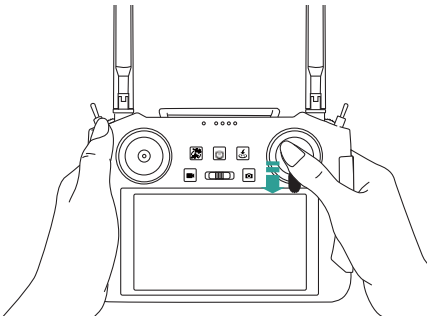

飞行器降落在平地之后，向正下方拨动右摇杆并保持 5 秒以上电机停转。

起飞与降落，固定翼 / 旋翼切换（日本手）

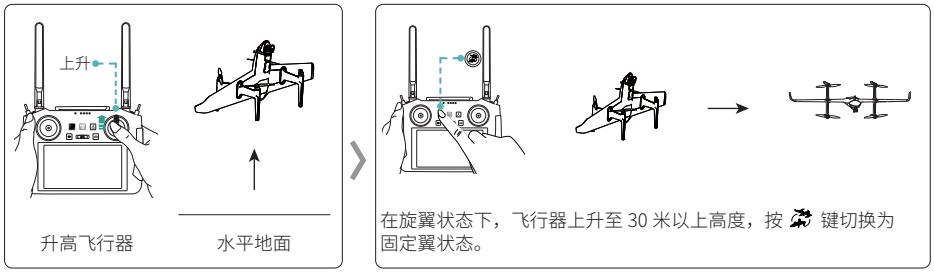

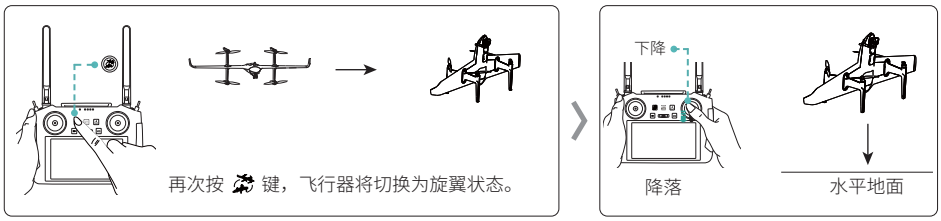

断开电源

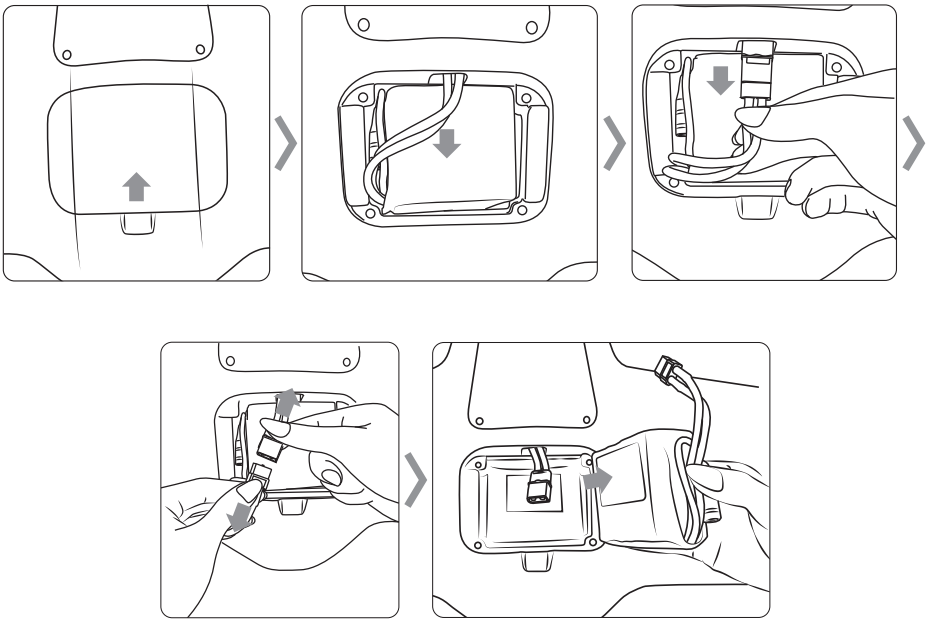

导出照片和视频

推开机头顶端的盖板，取下 SD 卡，即可拷贝高清图片和视频。

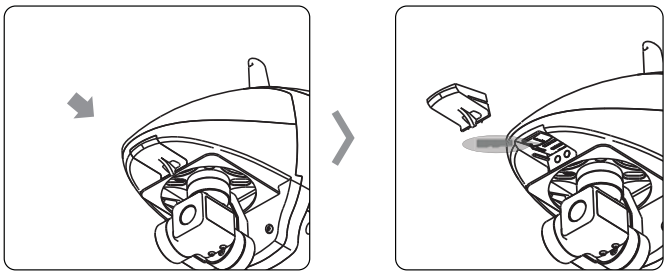

本文档如有更新，恕不另行通知。

您可以在 HEQUAV 官方网站查询最新版本
http:// www. hequavtech.com
Copyright©2022 禾启智能 版权所有