L9 PRO MAX

USER MANUAL

INTRODUCTION

Hello World

Thank you for purchasing the
The electric scooter industry is still young
and it takes forward-thinking customers like
yourself to advance it. We hope you enjoy
your new scooter as much as we loved
developing it.

Model: L9 PRO MAX
FCC ID: 2AZ3Z-ZSF3151
This device complies with part 15 of the FCC
Rules. Operation is
subject to the following two conditions:

(1) This device may not cause harmful interference, and
(2) This device must accept any interference received,
including
interference that may cause undesired operation.

FCC Compliance Statement for USA
This device complies with part 15 of the FCC Rules. Operation is subject to the following two conditions:
1. This device may not cause harmful interference.
2. This device must accept any interference received, including interference that may cause undesired operation.
This equipment has been tested and found to comply with the limits for a Class B digital device, pursuant to part 15 of the FCC Rules. These limits are designed to provide reasonable protection against harmful interference in a residential installation. This equipment generates uses and can radiate radio frequency energy and, if not installed and used in accordance with the instructions, may cause harmful interference to radio communications. However, there is no guarantee that interference will not occur in a particular installation. If this equipment does cause harmful interference to radio or television reception, which can be determined by turning the equipment off and on, the user is encouraged to try to correct the interference by one or more of the following measures:
— Reorient or relocate the receiving antenna.
— Increase the separation between the equipment and receiver.
— Connect the equipment into an outlet on a circuit different from that to which the receiver is connected.
— Consult the dealer or an experienced radio/TV technician for help.
FCC Note
The device has been evaluated to meet general RF exposure requirement. The device can be used in portable exposure
condition without restriction.
Changes or modifications not expressly approved by the party responsible for compliance could void the user's authority to operate the equipment.

Contents

Specs 4
Unboxing 5
Assembly 6
Testing..... 8
Operation 10
Display 15

Battery Info..... 17
General Safety 18
Maintenance 20
Troubleshooting..... 24
FAQs 27
..... 28

SPECS

Net Weight	17.6 kg
Dimensions	116 x 53.5 x 114 cm
Maximum Load	120 kg
Minimum Load	20 kg
User Height	From 130 cm to 190 cm
Maximum Grade %	10%
Maximum Speed	20 km/h
Range	Up to 50 km depending on different factors including but not exclusive to: user's weight, road conditions, speed.
Battery	21700 cell 36V15Ah (30 cells X 5000 mAh)
Battery Type	Lithium-ion
Power Requirement	AC110-240V / 50-60 HZ —— Input: AC 100-240V 50/60 HZ 2.0A —— Output: DC 42V 2.0A
Charging Time	7h-8h
Wheels	Front: 10 inch rubber tyre, inflatable inner tube. Bearings: 6001RS. —— Rear: 10 inch rubber tyre hub motor, inflatable inner tube. Bearings: 6202RS. Make sure to respect inflation pressure recommendations: Front tire max 2.4 bar or 36 PSI, rear tire max 2.4. bar or 36 PSI.
Motor	500W
Brakes	Front drum brake and rear regen brake

UNBOXING

Intro

Setting up your scooter right is the single most important step to your safety.

We recommend having the following items ready prior to starting the setup process:

• Box cutters or knife
• Stool or bench
• Air pump
• Strong friend

Unbox your scooter

Open the box using the box cutter and fold open the top. Inside you should see protective styrofoam along with the following contents:

- Manual
- Charger and cable
- Allen key

With the help of someone, remove the scooter from the box and place it on a flat surface. We recommend using a stool or bench as the wheels need to be able to spin freely.

Carefully remove the protective material from the scooter and set it aside. We suggest keeping both the styrofoam and the box in case you need to ship your scooter back to us. Otherwise recycle the materials wherever possible.

ASSEMBLY

Unfolding

1 The first step is to unfold your electric scooter. To do so,ensure the hook is not clipped into the rear foot rest. If it is, push down on the stem and unhook it from the rear foot rest.

2 Unfold the stem by pulling it to a vertical position. Ensure you do so until the stem is completely vertical.

3 Locate the folding latch and bring it up, locking the stem. The latch will require some force to lock fully upright.

4 Lastly, make sure the safety button of the folding mechanism is clipped in the stem. This safety mechanism prevents the latch from unlocking due to vibration or shock.

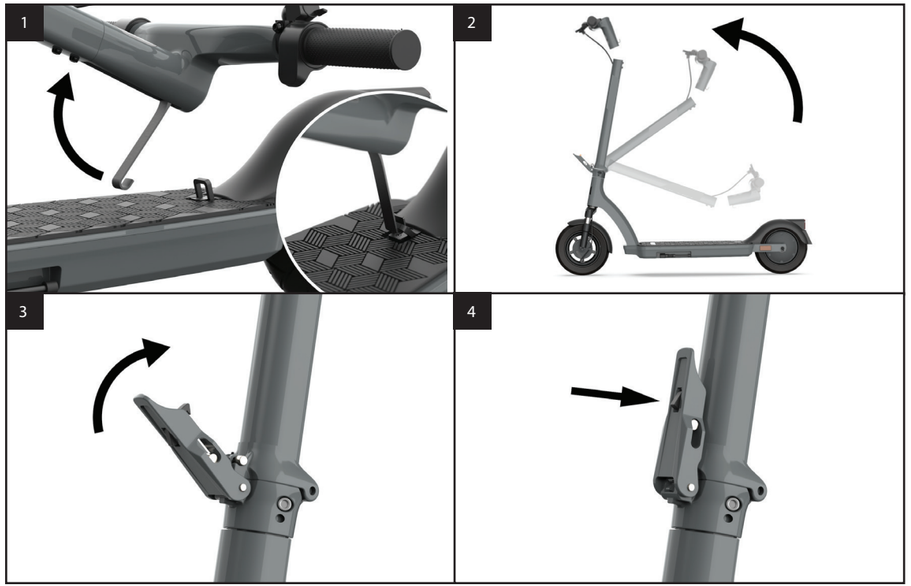

Attach handlebar

1 Connect the male connection cable coming out of the handlebar into the female cable coming out of the front stem. Make sure the pins are aligned.

2 Make sure the male port and the female port are aligned properly. Insert the handlebar at the top of the front stem and tighten into place with the hex screw provided.

3 Caution: Be careful not to damage the cable when connecting the handlebar to the front stem.

4 You will find that the latches and buttons on your handlebar are not tight. We deliver this way to avoid damage during shipping. Before tightening the screws, adjust the left button panel. Twist it upward or downward until it reaches a comfortable angle, keep in mind that once on a scooter, you will be higher up than you are while setting up your scooter. When you have found a comfortable position, go ahead and tighten the screws.

5 Repeat the same process for the screws on the right hand side of your handlebar.

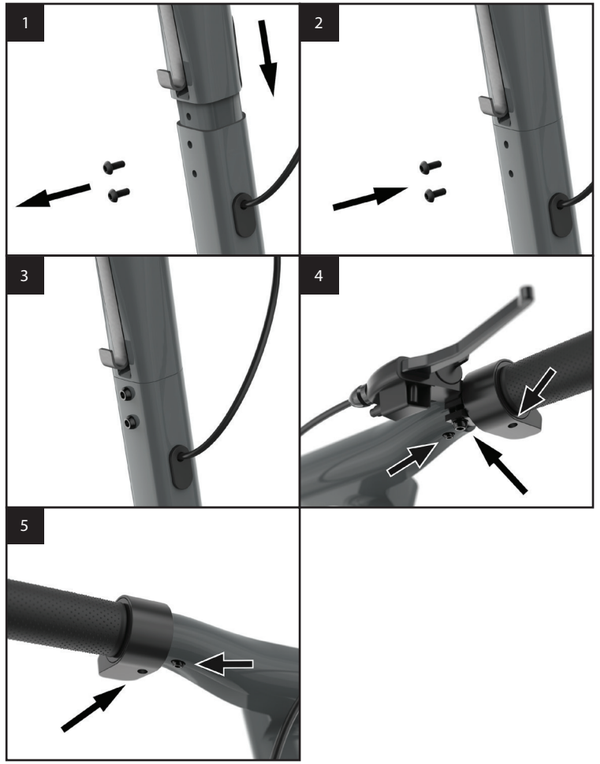

TESTING

1 Turn on the scooter by pressing on the power button located at the bottom of the display. To turn it on press the button from 2 to 3 seconds, until you hear a beep.

The speedometer, speed units, and the battery level should now be visibile on the display.

2 Check that the gear change function is working properly by pressing shortly on the power button again.

A green "S" should now be visible on the display, a third press should make the "S" turn to red, changing to the top speed gear.

To learn more about the speed of each gear refer to the display section in this manual.

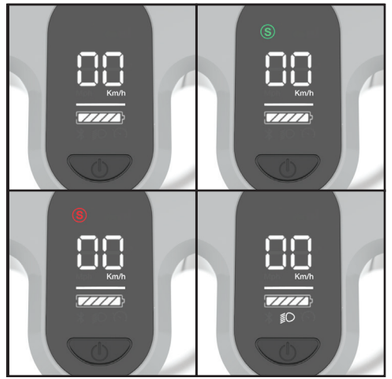

3 Now test your brakes — Press the throttle on the right side of your handlebar and notice both wheels start to accelerate. Continue to accelerate for 5 seconds, then release the throttle and slam your brakes at the same time. The wheel should stop immediately.

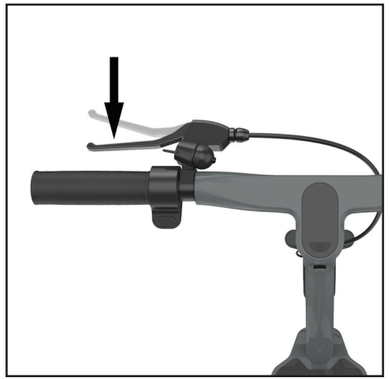

4 Next, grab an air pump and locate the air valve on the front tire. Remove the safety cap and attach the pump tube to the tire valve. Turn on the air pump and read the PSI measure — the ideal tire pressure for the Air is 36PSI.

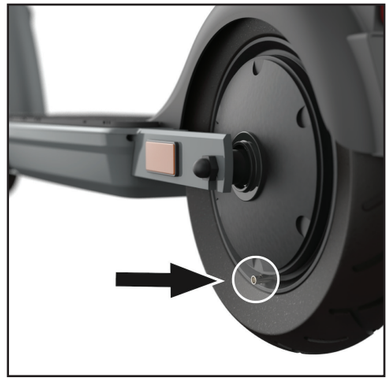

5 Inflate or deflate the tire as needed until the pressure is 36PSI. Repeat the step with the rear tire.

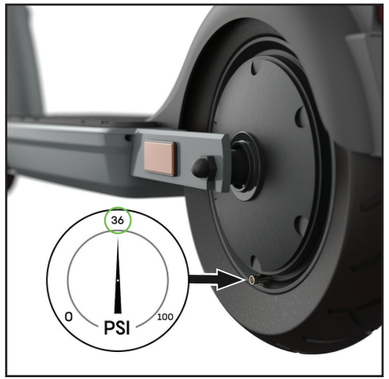

Congratulations, you have successfully set up your new Electric Scooter

OPERATION

Charging

This section focuses on how to charge your scooter correctly. For information about battery health and best practices, please review the Battery Information section.

The battery pack comes with a built-in battery management system. This includes overcharging protection amongst other features, allowing your scooter to stay plugged in even after it is fully charged.

Please note that this applies to short periods of overcharging, such as the scooter being plugged in overnight. Please do not leave the scooter plugged in and charging for extended periods of time as it may result in battery damage or fire.

1. First, ensure the two parts of the charger are connected securely. The wall AC plug should be connected to the charger box. The connection between the cable and box should feel firm with no wobble or play.
2. Proceed to plug the AC plug into a power outlet.
3. Next, locate the charging port cap on your scooter and open it to find the charging port. Locate the round connector on one end of the charger, this is the end you must insert in the charging port. Gently insert the cable.
4. If the battery is 100% full, the charger light will turn green. If the battery is not fully charged, the charger light will light up red.

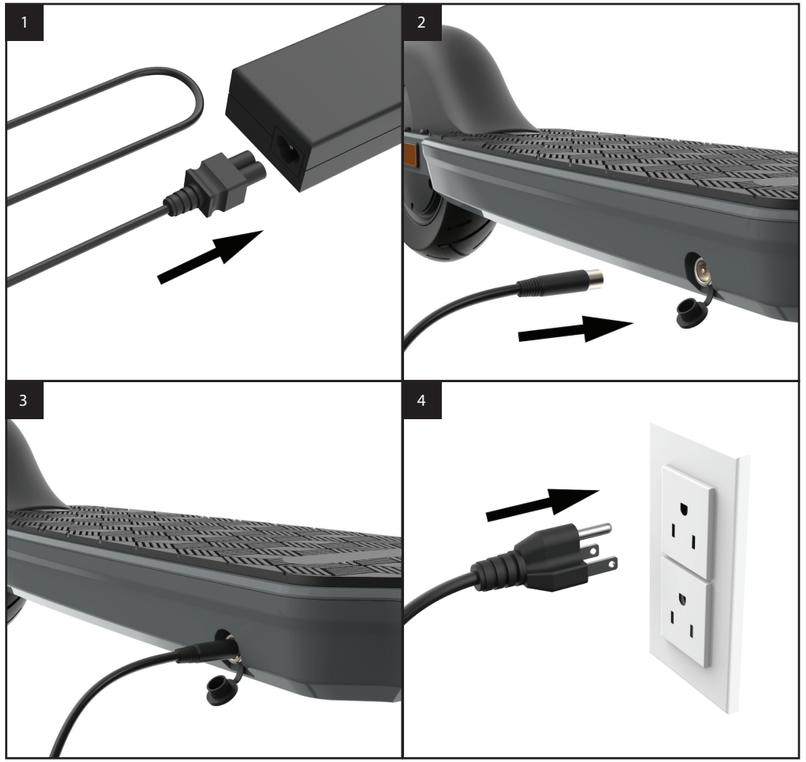

How to brake

It has two different types of brakes. The regen brake which allows you to capture energy from braking and recharge your battery, and the drum brake.

The regen brake will allow you to have a smoother and more efficient stop.

IMPORTANT:

We recommend you not to use the regen brake when the battery is 100% charged . This can cause an overcharged battery and result in damage to the controller or the battery. You should only start using the regen break when the battery is at 90% charge level or less.

Additionally, keep in mind that using the regen brake for long periods of time (for example a long downward hill) can generate a lot of heat and have a negative impact on the controller. We recommend using the regen brake only for short period of time.

WARNING:

In rain or wet weather, braking distances increase. A failure to take this into consideration in such conditions can cause component or performance failure, loss of control, serious injury, or death.

Throttle

It comes equipped with two thumb throttles, one on each side of the handlebar for ease of use. The throttle is designed to be progressive - this means that a soft press on the throttle will exert proportionately little acceleration. Full pressure on the throttle will trigger maximum output and therefore peak acceleration.

Folding

1. To fold, begin by locating the safety button and press it to unlock the folding lever.
2. Grab the folding latch, and pull it down to fold the stem. Make sure to keep one hand on the stem at all times as it will drop down instantly after the folding latch is released.
3. Pull it down until you feel the latch is fully open.
4. Fold down the stem towards the foot stand.
5. Make sure it is folded all the way down before moving on to the next step.
6. Locate the locking hook on the inside of the from stem and take it out.
7. Attach the hook on the stem to the locking ring located at the end of the deck, near the foot rest and the rear wheel. Attach the hook to the locking ring.

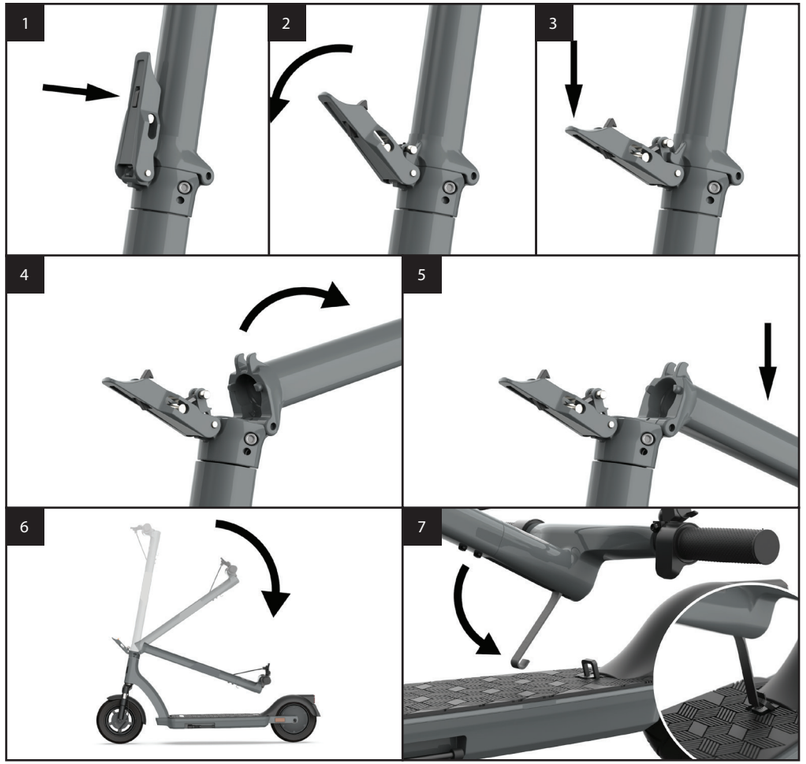

Handlebar features

1 Display

2 Accelerator throttle

3 Power button

4 E-brake throttle

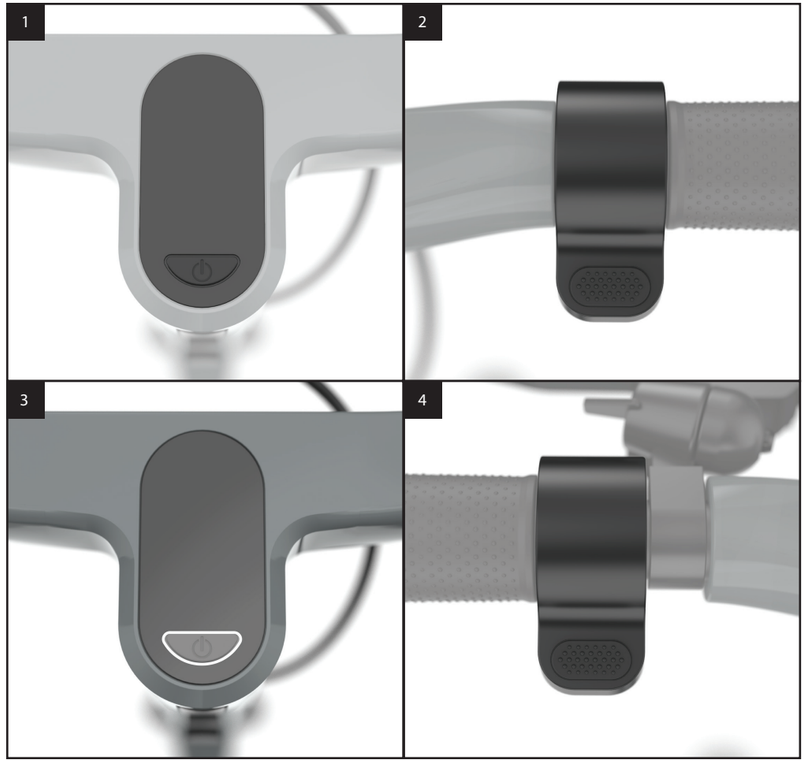

DISPLAY

The display screen, located on the handlebar, shows you the speed, speed units, the battery charge, selected gear, and any failure displays.

1 ON/OFF

The scooter is controlled by one single button, the power button.

Turn ON — Long Click 2 Seconds
Turn OFF — Long click until the display turns off

2 CHANGING GEARS

1st gear — After turning it on, your scooter will automatically start on the first gear with a max speed of 4mph. It will be on kickstart mode so you will need to give it a little push to start riding.

2nd gear — Give the power button 1 Short click, a green "S" should appear on the display. The max speed for this gear is 9 mph.

3rd gear — Make another short click on the power button changing the green "S" on the display to a red "S". The max speed for this gear is 12 mph

3 LIGHTS

To turn on the lights, make two successive clicks on the power button.

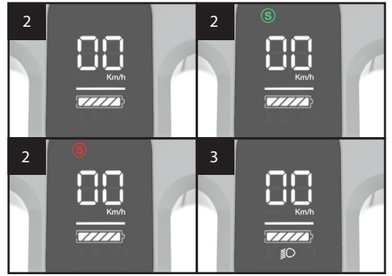

NOTICE:
When there is only one battery bar remaining, it is advisable to stop using the scooter if possible and to recharge it in order to prolong the lifespan of the battery, a deep discharge will decrease the lifespan of the battery.

NOTICE:
While riding you may notice an occasional beeping noise. It has been programed to indicate when you go are riding above the speed of the gear selected.

SETTINGS

App

You can manage your settings through the scooter APP by BT

The App is available for iOS and Android. To download it,

You can also download it using the following QR code:

Ios Android

To use the App, follow the steps indicated in the App.
Since we are constantly upgrading it for a superior user experience, we recommend for you to reach out to our support

BATTERY INFO

Charging

- Charge the scooter fully after every ride. This will prolong the battery life.
- When charging, wait for the charger light to turn green. The charging process will then be complete and all the cells will have been balanced by the battery management system.
- If not used, power on the scooter once at least once a month to check the charge level. Ideally, the charge level should be between 70% and 90%.

Storage

- The storage temperature needs to be between 10°C–25°C / 50°F –77°F
- For long term storage (such as the winter season), the ideal battery level is approximately 70% (37V). This is based on the fact that at 70% charge level, the energy inside the battery cells is the most stable.

GENERAL SAFETY

Road safety & legislation

Your Assumption of Risk For Road Safety and Observation of All Laws.
You are responsible to perform due diligence, understand and follow all laws, rules and regulations, for the safe and lawful operation of your electric scooter, in the locations in which you choose to operate it. If not used properly or lawfully, electric scooters can lead to injury or death. By purchasing an Apollo scooter, you assume the responsibility for its safe and lawful operation as well as the risks for any failure to safely and lawfully operate it. Any fines due to illegal or unauthorized use, including but not limited to any failures to wear protective equipment, are your responsibility.

Protective Gear

We strongly recommend wearing protective equipment any time the scooter is in use. The equipment includes, but is not limited to, helmets, knee and elbow pads, and protective armour.

IMPORTANT

Do NOT ride under the influence of any drugs, alcohol or substance that could limit or affect judgement, control or rider safety. The rider is fully liable and responsible for riding these scooters with a fully conscious and sober mind, to ensure a safe ride.

MAINTENANCE

A tune up consists of the following steps:

- Tire pressure check
- Bearing lubrication
- Suspension lubrication
- Brake adjustment
- Screw tightening

You will need a few things to get these done, all of them can be purchased at a local hardware store. If you have difficulty locating these items, contact our support team for help:

- Electric tire pump/inflator
- Jig-a-loo lubricant (or any other lithium grease in spray format)
- Brake pads
- Blue Loctite
- Basic toolkit

These are low cost items that, if used regularly, can make your scooter last dramatically longer. In other words, they're an investment definitely worth making.

Tire pressure

Let's get started with a tire pressure check, which will allow you to see the tire pressure of your tires. The ideal tire pressure for Apollo scooters is 36PSI. It is important to keep you tires at the correct pressure for a better riding experience and to avoid getting a flat tire.

To get started place your scooter on a bench, chair, or box, making sure that the tires are easy to access. Start with the front tire - locate the air valve and remove the safety cap.

Attach the air hose and flip the latch to tighten it. You should be able to power on your electric pump and get a read of the current tire pressure. If it's below 36PSI, start to inflate until the dial reads exactly 36.

If the pressure is higher than 36PSI, deflate the tire by pressing down on the air valve mechanism. To do so, find a small object such as an the allen key provide it and insert it into the air valve. You will hear the air escape. Do so until the tire feels flat, then reattach the electric pump and inflate until at 36PSI.

When the tire is properly inflated, put the cap back on the air valve. Repeat the process with the other tire.

Bearing lubrication

The next maintenance step is to lubricate the bearings. Your bearings are the connection between the rotating wheels of your scooter and the non-rotating frame that holds them stable. As you use your scooter, the friction can cause the bearing to get worn out - we prevent it from happening by lubricating it regularly.

Start by cleaning the bearings using with a clean and wet towel, you can spin the wheel at the same time which might make it easier for you to clean. After your bearings are clean, it's really important for you to add lubricant to the bearings, if you don't they will get worn very rapidly.

Spray the lubricant generously. Spray directly at the bearings and in the general bearing direction, since they are sealed for better protection. Spin your wheel at the same time to make sure the lubricant is dispersed effectively.

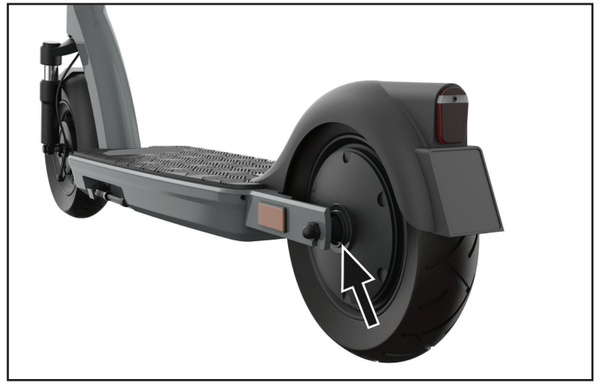

Suspension lubrication

Similar to the bearings, the suspension must also be lubricated. The constant movement of the suspension causes friction and may result in noises or squeaking sounds.

Ensure the suspension is clean before lubricating. Spray the lubricant inside the spring and on the travel shaft of the spring located inside the coil. Then spray on the top and bottom pivot points of the suspension.

A good way to distribute the lubricant inside of the suspension spring is to jump lightly on the scooter following the application of lubricant. The up-down movement will create friction and will help distribute the lubricant throughout the suspension system.

Drum Brake Adjustment

Your brakes are an important component of your scooter. If you feel your brakes are not performing as well as they should, you might want to tighten your brakes.

1 The first point of control of your brakes is your brake handle. Locate the adjustment screw at the connection of the brake line to the brake handle. Turn it counterclockwise to tighten your brake.

Turning it clockwise will loosen your brake. If you have reached the maximum position of the adjustment screw and the brakes are not comfort ably tight, proceed to the next step.

2 Find the brake lever located on the left hand side of the wheel and lift it up. Then gently pull the line down to release the tension on the brake line. If the brake is too loose then you can tighten the nob.

3 Release the line and the lever to check the brake on the handlebars. If you find your brakes are too tight now, then you can reverse the process and untighten the brakes a little bit.

A properly adjusted brake should leave about 2 cm of space between the brake lever and the grip handle.

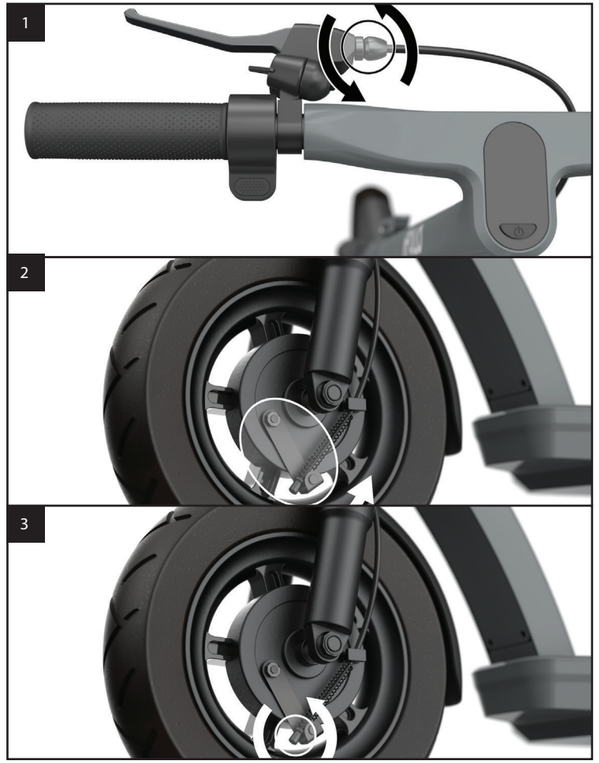

Screw Tightening

Use the included allen key to tighten the screws highlighted on the following graphics.

Your scooter motor creates vibrations when you ride it, which may cause the screws on your scooter to loosen over time. We recommend checking your screws every few months to make sure they remain tight. You can use a medium strength headlocker adhesive to further improve their stability.

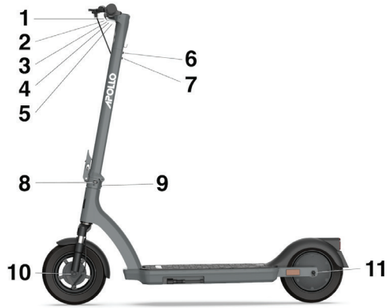

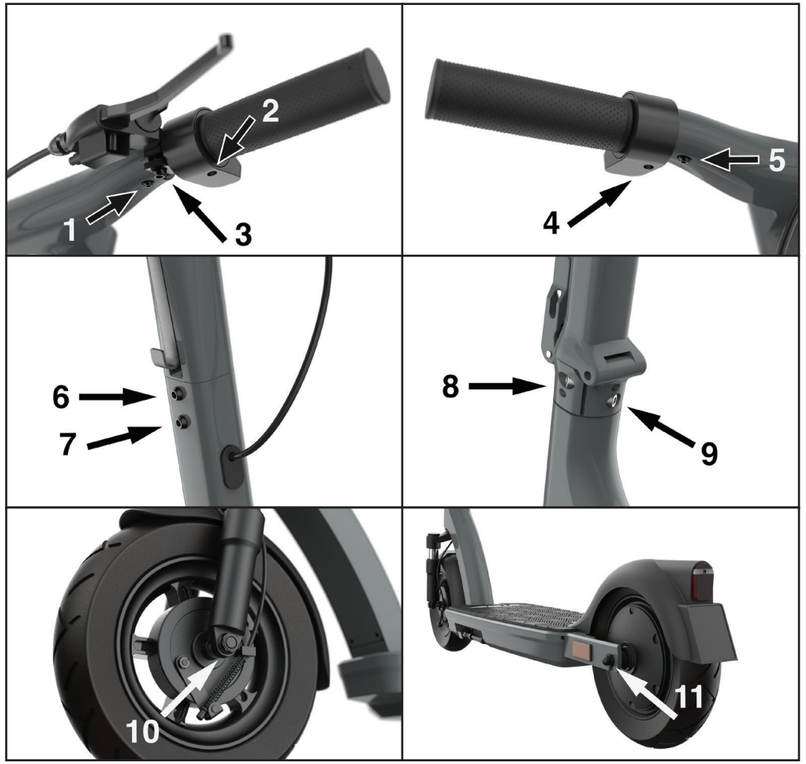

TROUBLESHOOTING

Error codes

Your scooter comes with a built-in communication system that allows for quicker diagnosis of common issues. Please consult the following table for a classification of codes.

E1 F1

BRAKE ERROR

F1 is reported when the power-on self-test fails.
E1 is reported when the error occurs during operation.

Error Code:
If E1/F1 is reported, the brake handle or its connection could be faulty.

Solution 1:
Check whether the brake handle wire is connected properly.

Solution 2:
Replace brake handle to test, if the error code goes away the handle was the issue.

Solution 3:
Replace the handlebar assembly to test, if the error code goes away the display was the issue.

E2 F2

THROTTLE ERROR

F2 is reported when the power-on self-test fails.
E2 is reported when the error occurs during operation.

Error Code:
If E2/F2 is reported, the throttle or its connection could be faulty.

Solution 1:
Check whether the throttle wire is connected properly and the throttle isn't out of position.

Solution 2:
Replace the throttle to test, if the error code goes away the throttle was the issue.

Solution 3:
Replace the handlebar assembly to test, if the error code goes away the display was the issue.

E3

COMMUNICATION ERROR

E3 will show the error in power system running.

Solution 1:
Check if the connection between the handlebar assembly and the communication cable in the stem is good.

Solution 2:
Replace handlebars to test, If the error code goes away the handlebars were the issue.

Solution 3:
Replace the controller to test, if the error code goes away the contoller was the issue.

E4

OVER CURRENT PROTECTION

If E4 error is reported continuously, it is considered to be hardware fault of controller.

Solution:
Replace the controller to test, if the error goes away the controller was the issue.

E5

UNDER VOLTAGE PROTECTION

If E5 is reported continuously, check whether the battery voltage is too low (Below 30 Volts).

Solution:
Replace with a new battery to test, if the error goes away the battery was the issue.

E6

OVER VOLTAGE PROTECTION

If E6 is reported the battery voltage is too high.

Solution:
The battery voltage is too high, avoid sudden braking, rushing actions and it will return to normal when part of the power has been used up.

E7

MOTOR SENSOR ERROR

If E7 is reported this means that a faulty motor sensor is present.

Solution:
Replace the motor to test, if the error goes away the motor was the issue.

E8

MOTOR PHASE LOSS

If E8 is reported this means that one or more phase connectors are not properly connected or properly working.

Solution 1:
Check if the phase wires are properly connected.

Solution 2:
Replace the controller to test, if the error goes away the controller was the issue.

Solution 3:
Replace the motor to test, if the error goes away the motor was the issue.

E9

CONTROLLER ERROR

If E9 is reported continuously, this means that the controller is faulty.

Solution:
Replace the controller to test, if the error goes away the controller was the issue.

FAQ s

Voltage fluctuations

You may notice the voltage on your scooter go up and down as you press and release the throttle or perhaps as you ride uphill. This is completely normal and it means that the scooter is exerting more energy. To get an accurate reading of your voltage, release the throttle and wait for a few seconds until the voltage stabilizes.

Avoid Exposure to Water and Humidity

You must avoid exposing your scooter to water and humidity. Electric scooters are not waterproof and are not designed for extreme or prolonged exposure to water or humidity. Operating your scooter in rain or wet conditions can cause component or performance failure, loss of control, serious injury, or death. Please note that any damage to the scooter due to water exposure is not covered by warranty.

L9 PRO MAX