FCC TEST REPORT
FCC Part 18
FCC ID:2AZ4X-AB0368

Report Number.....:	**ZKT-221108L8309E**
Date of Test.....	Nov. 07, 2022 to Nov. 14, 2022
Date of issue.....:	Nov. 14, 2022
Total number of pages.....	19
Test Result .....:	PASS
Testing Laboratory.....:	**Shenzhen ZKT Technology Co., Ltd.**
Address .....:	1/F, No. 101, Building B, No. 6, Tangwei Community Industrial Avenue, Fuhai Street, Bao'an District, Shenzhen, China
Applicant's name .....:	**Dongguan Leaper Electronic Technology CO.,LTD**
Address .....:	NO.22 ,Xinbao second Street,Dalang new town, Dongguan City
Manufacturer's name .....:	**Dongguan Leaper Electronic Technology CO.,LTD**
Address .....:	NO.22 ,Xinbao second Street,Dalang new town, Dongguan City
Test specification:	
Standard.....:	FCC Part 18
Test procedure.....:	/
Non-standard test method .....:	N/A
Test Report Form No.....:	TRF-EL-117_V0
Test Report Form(s) Originator.....:	ZKT Testing
Master TRF .....:	Dated: 2020-01-06

This device described above has been tested by ZKT, and the test results show that the equipment under test (EUT) is in compliance with the FCC requirements. And it is applicable only to the tested sample identified in the report.
This report shall not be reproduced except in full, without the written approval of ZKT, this document may be altered or revised by ZKT, personal only, and shall be noted in the revision of the document.

Product name.....:	WIRELESS CHARGER
Trademark .....:	N/A
Model/Type reference.....:	AB0368
Ratings.....:	Input: 5V/2A，9V/1.67A Wireless Output:5V/1A,9V/1.1A

Testing procedure and testing location:

Testing Laboratory.....:	**Shenzhen ZKT Technology Co., Ltd.**
Address.....:	1/F, No. 101, Building B, No. 6, Tangwei Community Industrial Avenue, Fuhai Street, Bao'an District, Shenzhen, China
Tested by (name + signature).....:	Alen He
Reviewer (name + signature).....:	Joe Liu
Approved (name + signature).....:	Lake Xie

TABLE OF CONTENT

Page

1.VERSION 4

2.GENERAL INFORMATION 5

2.1 Description of Device (EUT) 5
2.2 Tested System Details 5
2.3 Test Facility 5
2.4 MEASUREMENT UNCERTAINTY 6
2.5 Test Instrument Used 6

3.CONDUCTED EMISSION AT THE MAINS TERMINALS TEST 7

3.1 Block Diagram Of Test Setup 7
3.2 Test Standard 7
3.3 Power Line Conducted Emission Limit 7
3.4 EUT Configuration on Test 7
3.5 Operating Condition of EUT 7
3.6 Test Procedure 7
3.7 Test Result 7

4.RADIATION EMISSION TEST 10

4.1 Block Diagram of Test Setup 10
4.2 Test Standard 10
4.3 Radiation Limit 10
4.4 EUT Configuration on Test 11
4.5 Operating Condition of EUT 11
4.6 Test Procedure 11
4.7 Test Result 12

5.EUT PHOTOGRAPHS 16

6.EUT TEST PHOTOGRAPHS 17

1.VERSION

Report No.	Version	Description	Approved
ZKT-221108L8309E	Rev.01	Initial issue of report	Nov. 14, 2022

2.GENERAL INFORMATION

2.1 Description of Device (EUT)

EUT	:	WIRELESS CHARGER
Trademark	:	N/A
Model Number	:	AB0368
Model Difference	:	/
Power Supply	:	DC 5V From adapter input AC 120V/60Hz for charging

2.2 Tested System Details

None.

2.3 Description Of Support Units

The EUT has been tested as an independent unit together with other necessary accessories or support units. The following support units or accessories were used to form a representative test configuration during the tests.

Item	Equipment	Mfr/Brand	Model/Type No.	Series No.	Note
E1	WIRELESS CHARGER	N/A	AB0368	N/A	EUT
E2	Mobile Phone	N/A	OPPO A96	N/A	Auxiliary
E3	Adapter	N/A	PD-014	N/A	Auxiliary

2.4 Test mode

Test Modes:		
Mode 1	AC/DC Adapter + EUT + Mobile Phone	Record
Note: All test modes were pre-tested, but we only recorded the worst case in this report.		

2.5 Test Facility

Site Description

Name of Firm	:	Shenzhen ZKT Technology Co., Ltd.
Site Location	:	1/F, No. 101, Building B, No. 6, Tangwei Community Industrial Avenue, Fuhai Street, Bao'an District, Shenzhen, China

FCC Test Firm Registration Number: 692225
Designation Number: CN1299
IC Registered No.: 27033

2.6 MEASUREMENT UNCERTAINTY

Where relevant, the following measurement uncertainty levels have been estimated for tests performed on the Product as specified in CISPR 16-4-2. This uncertainty represents an expanded uncertainty expressed at approximately the 95% confidence level using a coverage factor of k=2.

Test item	Value (dB)
Conducted Emission (150K-30MHZ)	3.20
Radiated disturbance30MHz-1000MHz	4.80

2.7 Test Instrument Used

Conducted emissions Test

Item	Kind of Equipment	Manufacturer	Type No.	Serial No.	Last calibration	Calibrated until
1	LISN	R&S	ENV216	N/A	Oct. 15, 2022	Oct. 16, 2023
2	LISN	CYBERTEK	EM5040A	N/A	Oct. 15, 2022	Oct. 16, 2023
3	Test Cable	N/A	C01	N/A	Oct. 15, 2022	Oct. 16, 2023
4	Test Cable	N/A	C02	N/A	Oct. 15, 2022	Oct. 16, 2023
5	EMI Test Receiver	R&S	ESCI3	101421	Oct. 15, 2022	Oct. 16, 2023
6	Triple-Loop Antenna	LAPLACE	RF300	9194	Oct. 15, 2022	Oct. 16, 2023
7	Absorbing Clamp	DZ	ZN23201	N/A	Oct. 15, 2022	Oct. 16, 2023

Radiated emissions Test (966 chamber)

Item	Kind of Equipment	Manufacturer	Type No.	Serial No.	Last calibration	Calibrated until
1	Bilog Antenna	Schwarzbeck	VULB9168	N/A	Oct. 15, 2022	Oct. 16, 2023
2	Loop Antenna	SCHWARZBECK	FMZB1519B	014	Oct. 15, 2022	Oct. 16, 2023
3	Test Cable	N/A	R-01	N/A	Oct. 15, 2022	Oct. 16, 2023
4	Test Cable	N/A	R-02	N/A	Oct. 15, 2022	Oct. 16, 2023
5	EMI Test Receiver	R&S	ESCI7	101154	Oct. 15, 2022	Oct. 16, 2023
6	Antenna Mast	EM	SC100_1	N/A	N/A	N/A
7	Turn Table	EM	SC100	N/A	N/A	N/A
8	Spectrum Analyzer	KEYSIGHT	9020A		Oct. 15, 2022	Oct. 16, 2023
9	Horn Antenna (1GHz-18GHz)	Schwarzbeck	BBHA9120D	1541	Oct. 15, 2022	Oct. 16, 2023
10	Horn Antenna (18GHz-40GHz)	Schwarzbeck	BBHA9170	822	Oct. 15, 2022	Oct. 16, 2023
11	Amplifier (20-3000MHz)	EM Electronics	EZQ-LG3021 Amplifier	N/A	Oct. 15, 2022	Oct. 16, 2023
12	Amplifier (0.5GHz-18GHz)	SCHWARZBECK	8449B	9718-309	Oct. 15, 2022	Oct. 16, 2023
13	Amplifier (18GHz-40GHz)	MITEQ	ZLNA-18-40G-21	2034381	Oct. 15, 2022	Oct. 16, 2023

3.CONDUCTED EMISSION AT THE MAINS TERMINALS TEST

3.1 Block Diagram Of Test Setup

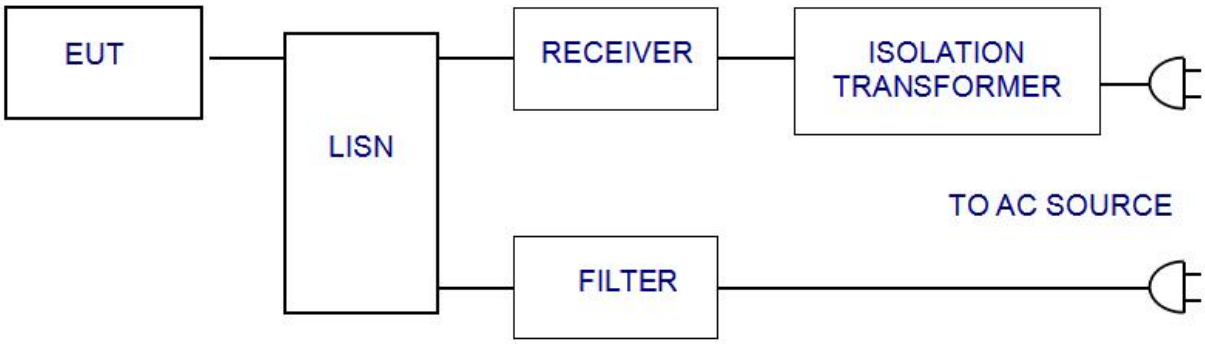

3.2 Test Standard

FCC PART 18

3.3 Power Line Conducted Emission Limit

Frequency MHz	Limits dB(μV)	
	Quasi-peak Level	Average Level
0.15 ~ 0.50	66 ~ 56*	56 ~ 46*
0.50 ~ 5.00	56	46
5.00 ~ 30.00	60	50

Notes: 1. *Decreasing linearly with logarithm of frequency.
2. The lower limit shall apply at the transition frequencies.

3.4 EUT Configuration on Test

The following equipments are installed on conducted emission test to meet FCC PART 18 requirement and operating in a manner which tends to maximize its emission characteristics in a normal application.

3.5 Operating Condition of EUT

3.5.1 Setup the EUT and simulators as shown in Section 3.1.
3.5.2 Turn on the power of all equipments.
3.5.3 Let the EUT work in test modes and test it.

3.6 Test Procedure

The EUT is put on the ground and connected to the AC mains through a Artificial Mains Network (AMN). This provided a 50ohm coupling impedance for the tested equipments. Both sides of AC line are checked to find out the maximum conducted emission levels according to the **FCC PART 18** regulations during conducted emission test.
The bandwidth of the test receiver (R&S Test Receiver ESCI) is set at 10KHz.
The frequency range from 150 KHz to 30 MHz is investigated.

3.7 Test Result

PASS

Please refer to the following page.

Conducted Emission At The Mains Terminals Test Data			
Temperature:	24.5 ℃	Relative Humidity:	54%
Pressure:	1009hPa	Phase :	Line
Test Voltage :	AC 120V/60Hz	Test Mode:	charging

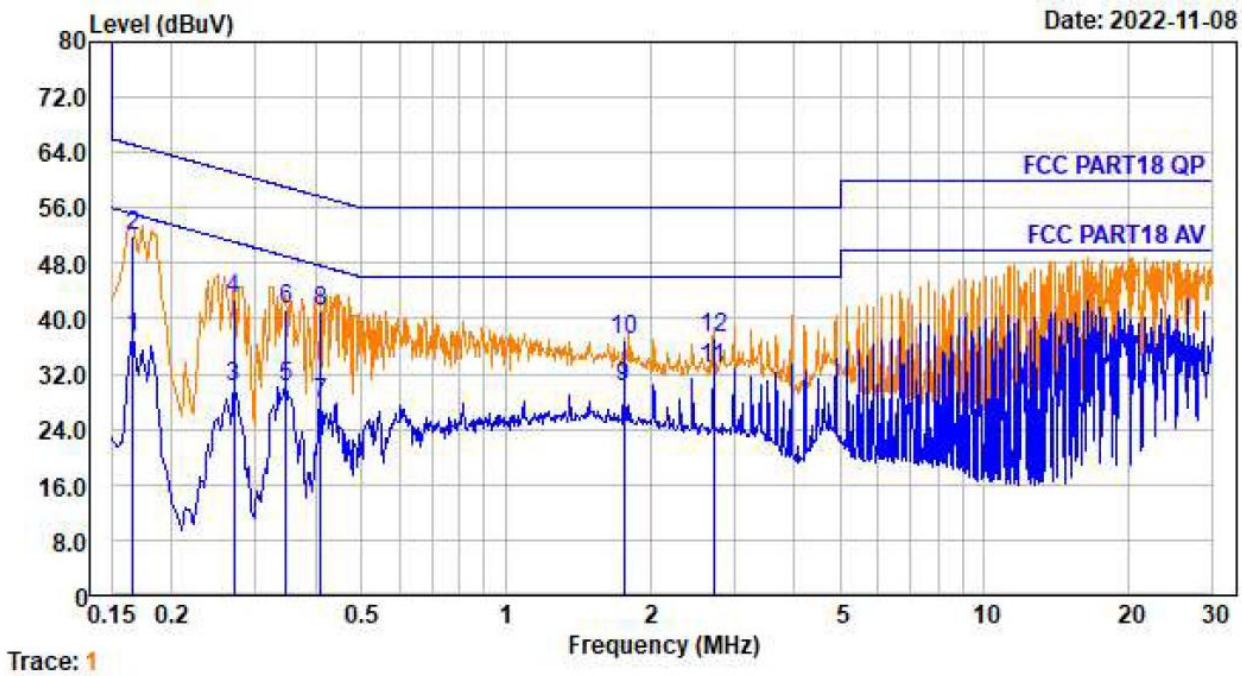

No.	Freq MHz	Cable Loss dB	LISN Factor dB/m	Receiver Reading dBuV	Emission Level dBuV/m	Limit dBuV/m	Over Limit dB	Remark
1.	0.166	0.00	9.54	27.80	37.34	55.16	-17.82	Average
2.	0.166	0.00	9.54	42.47	52.01	65.16	-13.15	QP
3.	0.270	0.01	9.56	20.57	30.14	51.12	-20.98	Average
4.	0.270	0.01	9.56	33.28	42.85	61.12	-18.27	QP
5.	0.346	0.01	9.56	20.50	30.07	49.05	-18.98	Average
6.	0.346	0.01	9.56	31.64	41.21	59.05	-17.84	QP
7.	0.410	0.01	9.57	18.11	27.69	47.64	-19.95	Average
8.	0.410	0.01	9.57	31.35	40.93	57.64	-16.71	QP
9.	1.762	0.04	9.58	20.55	30.17	46.00	-15.83	Average
10.	1.762	0.04	9.58	27.16	36.78	56.00	-19.22	QP
11.	2.721	0.05	9.59	23.17	32.81	46.00	-13.19	Average
12.	2.721	0.05	9.59	27.46	37.10	56.00	-18.90	QP

Conducted Emission At The Mains Terminals Test Data			
Temperature:	24.5 ℃	Relative Humidity:	54%
Pressure:	1009hPa	Phase :	Neutral
Test Voltage :	AC 120V/60Hz	Test Mode:	charging

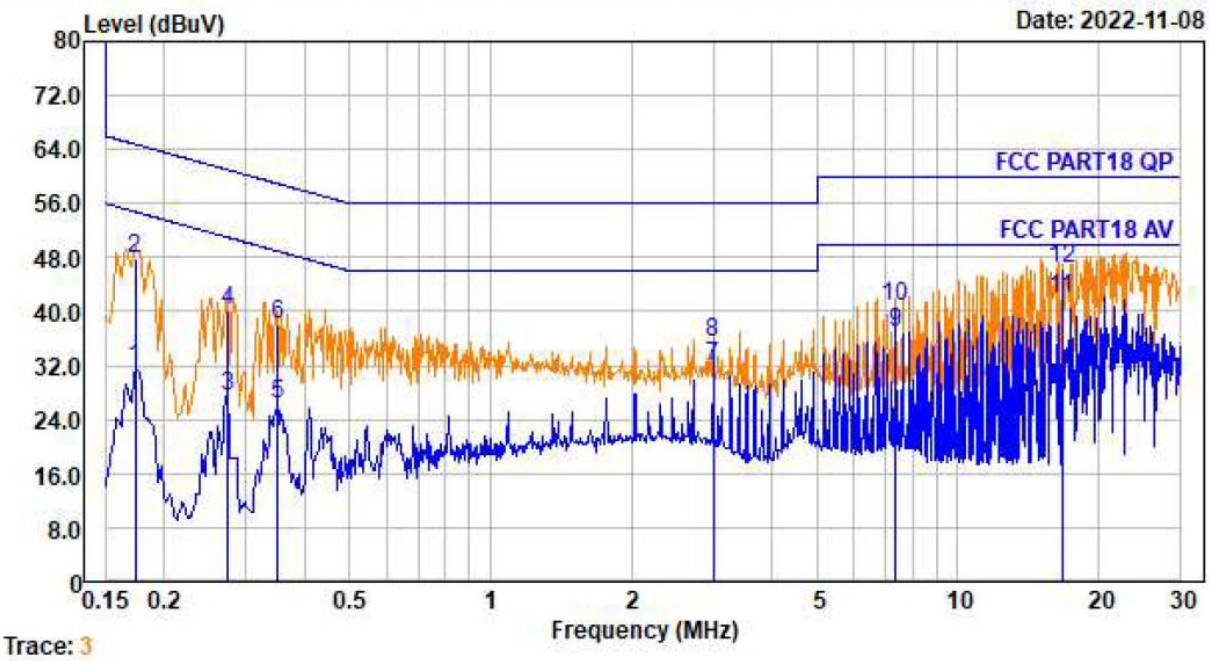

No.	Freq MHz	Cable Loss dB	LISN Factor dB/m	Receiver Reading dBuV	Emission Level dBuV/m	Limit dBuV/m	Over Limit dB	Remark
1.	0.174	0.00	9.55	22.10	31.65	54.77	-23.12	Average
2.	0.174	0.00	9.55	38.38	47.93	64.77	-16.84	QP
3.	0.274	0.01	9.56	17.91	27.48	50.98	-23.50	Average
4.	0.274	0.01	9.56	30.51	40.08	60.98	-20.90	QP
5.	0.350	0.01	9.56	16.59	26.16	48.96	-22.80	Average
6.	0.350	0.01	9.56	28.64	38.21	58.96	-20.75	QP
7.	2.993	0.06	9.59	22.14	31.79	46.00	-14.21	Average
8.	2.993	0.06	9.59	25.85	35.50	56.00	-20.50	QP
9.	7.368	0.09	9.72	27.15	36.96	50.00	-13.04	Average
10.	7.368	0.09	9.72	30.87	40.68	60.00	-19.32	QP
11.	16.750	0.13	9.80	32.00	41.93	50.00	-8.07	Average
12.	16.750	0.13	9.80	36.37	46.30	60.00	-13.70	QP

4.RADIATION EMISSION TEST

4.1 Block Diagram of Test Setup

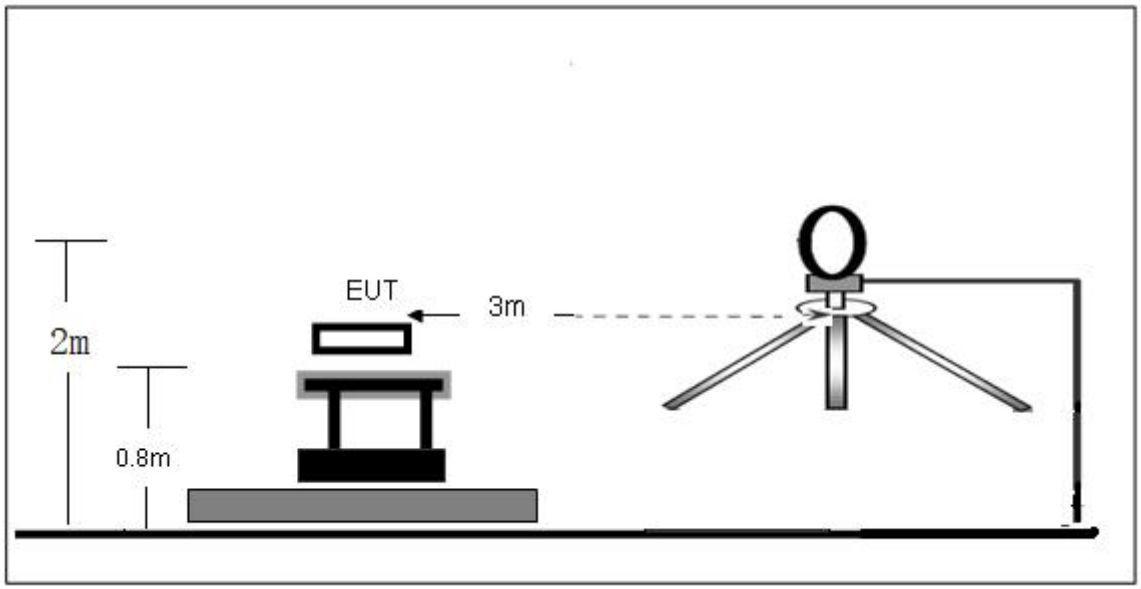

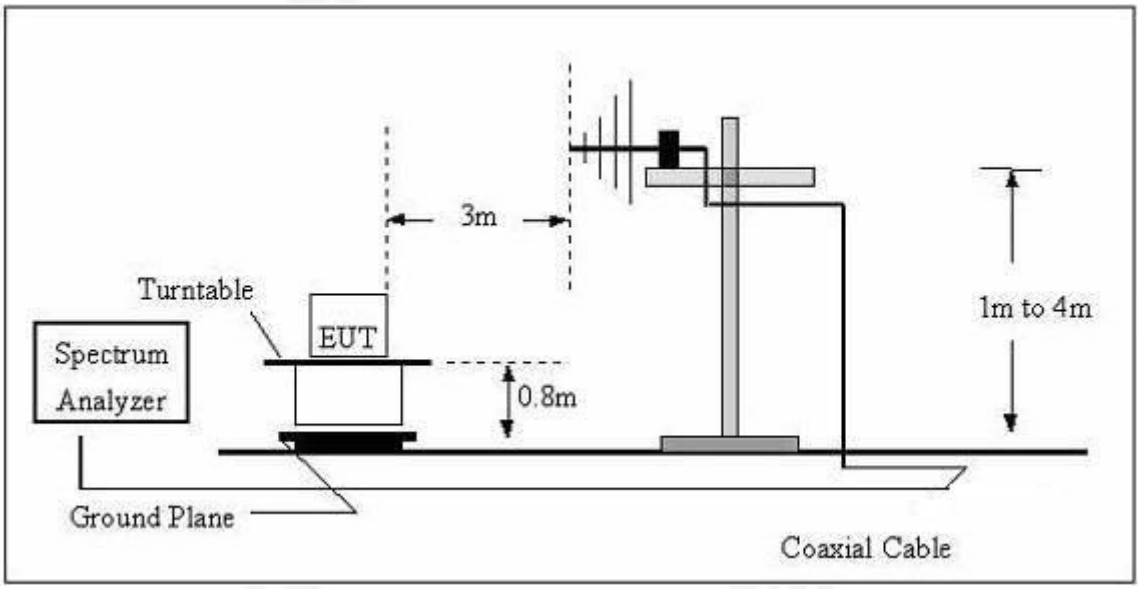

4.2 Test Standard

FCC PART 18

4.3 Radiation Limit

Limits for frequency below 30MHz

Except as provided elsewhere in this Subpart 18.305 (b), the field strength levels of emissions which lie outside the bands specified in § 18.301, unless otherwise indicated, shall not exceed the following table:

Frequency MHz	Distance Meters	Field Strengths Limit	
		dBμV/m	Remark
0.009~30MHz	3	103.5	Quasi-peak

Remark: (1) Emission level dB V/m for 0.009~30MHz = 20log (15) + 40log (300/3) dB V/m; (2) Calculated according FCC 18.305. (3) The smaller limit shall apply at the cross point between two frequency bands. (4) Distance is the distance in meters between the measuring instrument, antenna and the closest point of any part of the device or system.

Limits for frequency Above 30MHz

FREQUENCY (MHz)	DISTANCE (Meters)	FIELD STRENGTHS LIMITS (dBμV/m)
30 ~ 1000	3	63.5

(1) Emission level dB V/m for above 30MHz = 20log (15) + 20log (300/3) dB V/m

4.4 EUT Configuration on Test

The FCC PART 18 regulations test method must be used to find the maximum emission during radiated emission test.The configuration of EUT is the same as used in conducted emission test.Please refer to Section 2.2.

4.5 Operating Condition of EUT

Same as conducted emission test, which is listed in Section 2.2 except the test set up replaced as Section 4.1.

4.6 Test Procedure

1) Sequence of testing 9 kHz to 30 MHz
Setup:
--- The equipment was set up to simulate a typical usage like described in the user manual or described by manufacturer.
--- If the EUT is a tabletop system, a rotatable table with 0.8 m height is used.
--- If the EUT is a floor standing device, it is placed on the ground.
--- Auxiliary equipment and cables were positioned to simulate normal operation conditions.
--- The AC power port of the EUT (if available) is connected to a power outlet below the turntable.
--- The measurement distance is 3 meter.
--- The EUT was set into operation.
Premeasurement:
--- The turntable rotates from 0° to 315° using 45° steps.
--- The antenna height is 2.0 meter.
--- At each turntable position the analyzer sweeps with peak detection to find the maximum of all emissions
Final measurement:
--- Identified emissions during the premeasurement the software maximizes by rotating the turntable position (0° to 360°) and by rotating the elevation axes (0° to 360°).
--- The final measurement will be done in the position (turntable and elevation) causing the highest emissions with QPK detector.
--- The final levels, frequency, measuring time, bandwidth, turntable position, correction factor, margin to the limit and limit will be recorded. Also a plot with the graph of the premeasurement and the limit will be stored.

Sequence of testing 30 MHz to 1 GHz Setup:
--- The equipment was set up to simulate a typical usage like described in the user manual or described by manufacturer.
--- If the EUT is a tabletop system, a table with 0.8 m height is used, which is placed on the ground plane.
--- If the EUT is a floor standing device, it is placed on the ground plane with insulation between both.
--- Auxiliary equipment and cables were positioned to simulate normal operation conditions
--- The AC power port of the EUT (if available) is connected to a power outlet below the turntable.
--- The measurement distance is 3 meter.
--- The EUT was set into operation.
Premeasurement:
--- The turntable rotates from 0° to 315° using 45° steps.
--- The antenna is polarized vertical and horizontal.
--- The antenna height changes from 1 to 4 meter.
--- At each turntable position, antenna polarization and height the analyzer sweeps three times in peak to find

the maximum of all emissions.
Final measurement:
--- The final measurement will be performed with minimum the six highest peaks.
--- According to the maximum antenna and turntable positions of premeasurement the software maximize the peaks by changing turntable position (± 45°) and antenna movement between 1 and 4 meter.
--- The final measurement will be done with QP detector with an EMI receiver.
--- The final levels, frequency, measuring time, bandwidth, antenna height, antenna polarization, turntable angle, correction factor, margin to the limit and limit will be recorded. Also a plot with the graph of the premeasurement with marked maximum final measurements and the limit will be stored

4.7 Test Result

PASS
Please refer to the following page.

Radiation Emission Test Data			
Temperature:	26℃	Relative Humidity:	54%
Pressure:	1009hPa	Phase :	/
Test Voltage :	AC 120V/60Hz	Test Mode:	Mode 1

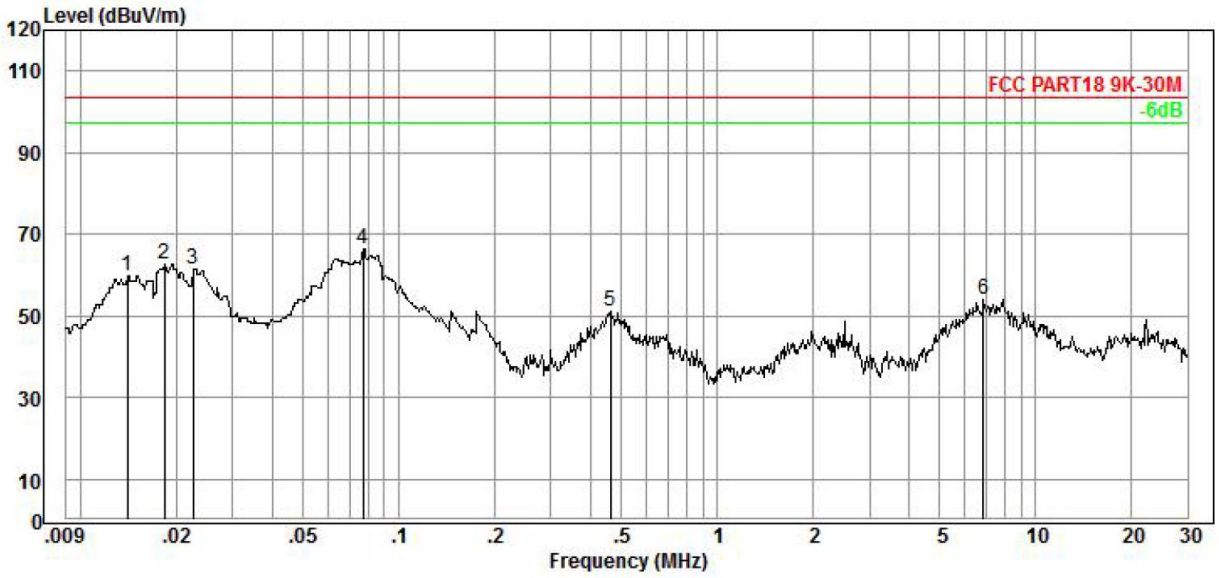

No.	Freq	Cable Loss	Factor	Receiver Reading	Emission Level	Limit	Over Limit	Remark
	MHz	dB	dB/m	dBμV	dBμV/m	dBμV/m	dB	
1	0.014	0.30	23.69	36.36	59.75	103.5	-43.75	Peak
2	0.018	0.30	23.69	39.16	62.55	103.5	-40.95	Peak
3	0.023	0.30	23.63	37.98	61.31	103.5	-42.19	Peak
4	0.077	0.31	23.60	43.19	66.48	103.5	-37.02	Peak
5	0.460	0.34	22.93	28.73	51.32	103.5	-52.18	Peak
6	6.854	0.43	21.62	32.71	53.9	103.5	-49.60	Peak

Radiation Emission Test Data			
Temperature:	26℃	Relative Humidity:	54%
Pressure:	1009hPa	Phase :	Horizontal
Test Voltage :	AC 120V/60Hz	Test Mode:	Mode 1

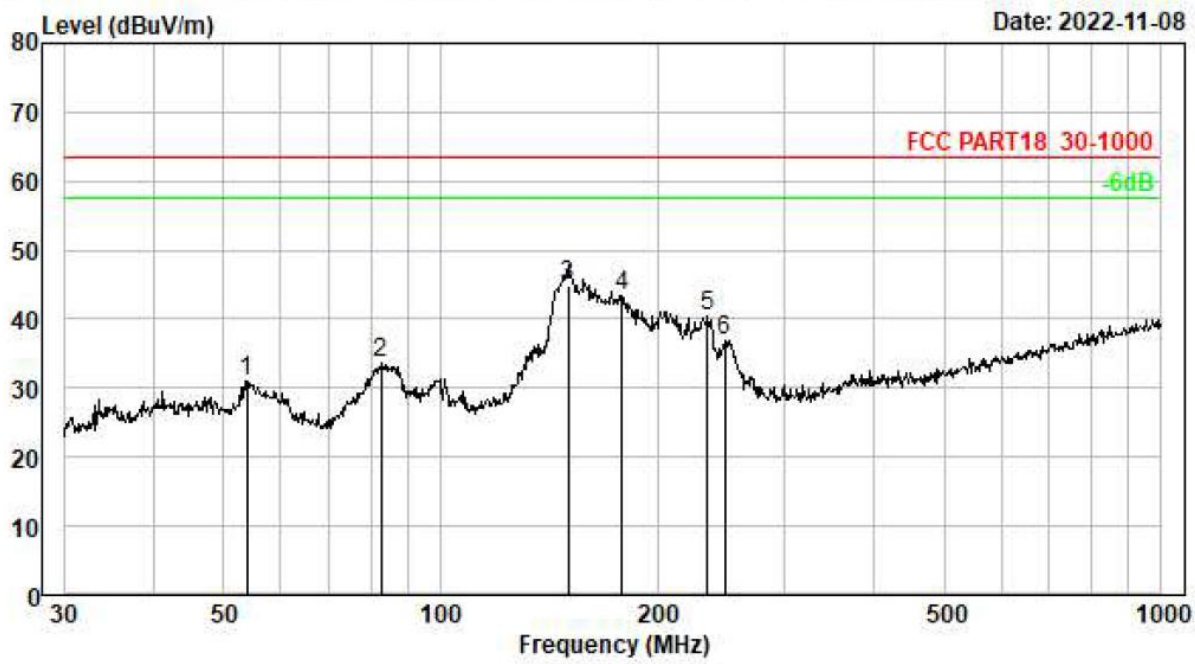

No.	Freq MHz	Cable Loss dB	ANT Factor dB/m	Receiver Reading dBμV	Preamp Gain dB	Emission Level dBμV/m	Limit dBμV/m	Over Limit dB	Remark
1	53.882	0.46	12.29	18.28	0.00	31.03	63.50	-32.47	QP
2	82.648	0.62	9.76	23.17	0.00	33.55	63.50	-29.95	QP
3	150.538	0.91	8.33	35.50	0.00	44.74	63.50	-18.76	QP
4	178.758	1.00	9.74	32.75	0.00	43.49	63.50	-20.01	QP
5	234.991	1.15	12.55	26.70	0.00	40.40	63.50	-23.10	QP
6	247.682	1.17	12.93	22.68	0.00	36.78	63.50	-26.72	QP

Radiation Emission Test Data			
Temperature:	26℃	Relative Humidity:	54%
Pressure:	1009hPa	Phase :	Vertical
Test Voltage :	AC 120V/60Hz	Test Mode:	Mode 1

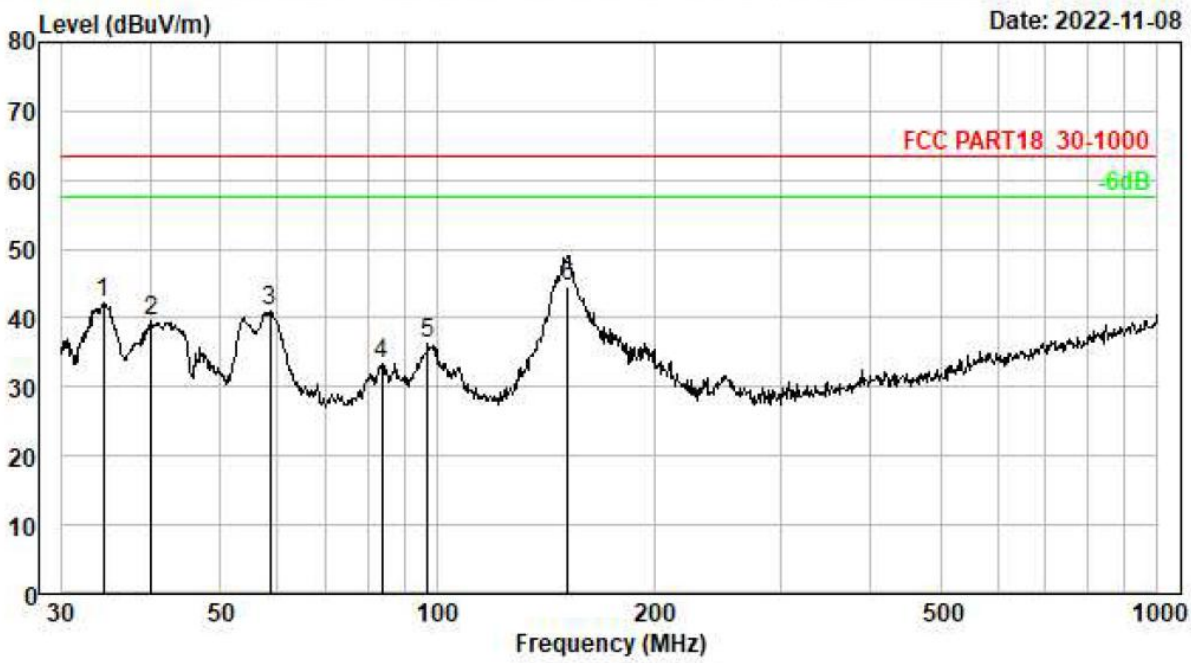

No.	Freq MHz	Cable Loss dB	ANT Factor dB/m	Receiver Reading dBμV	Preamp Gain dB	Emission Level dBμV/m	Limit dBμV/m	Over Limit dB	Remark
1	34.396	0.29	10.98	30.88	0.00	42.15	63.50	-21.35	QP
2	39.994	0.35	12.50	26.62	0.00	39.47	63.50	-24.03	QP
3	58.613	0.49	11.83	28.80	0.00	41.12	63.50	-22.38	QP
4	83.816	0.62	9.78	22.91	0.00	33.31	63.50	-30.19	QP
5	97.115	0.68	10.77	24.72	0.00	36.17	63.50	-27.33	QP
6	151.597	0.91	8.38	35.40	0.00	44.69	63.50	-18.81	QP

5. EUT PHOTOGRAPHS

Reference to the appendix II for details.

6.EUT TEST PHOTOGRAPHS

CE

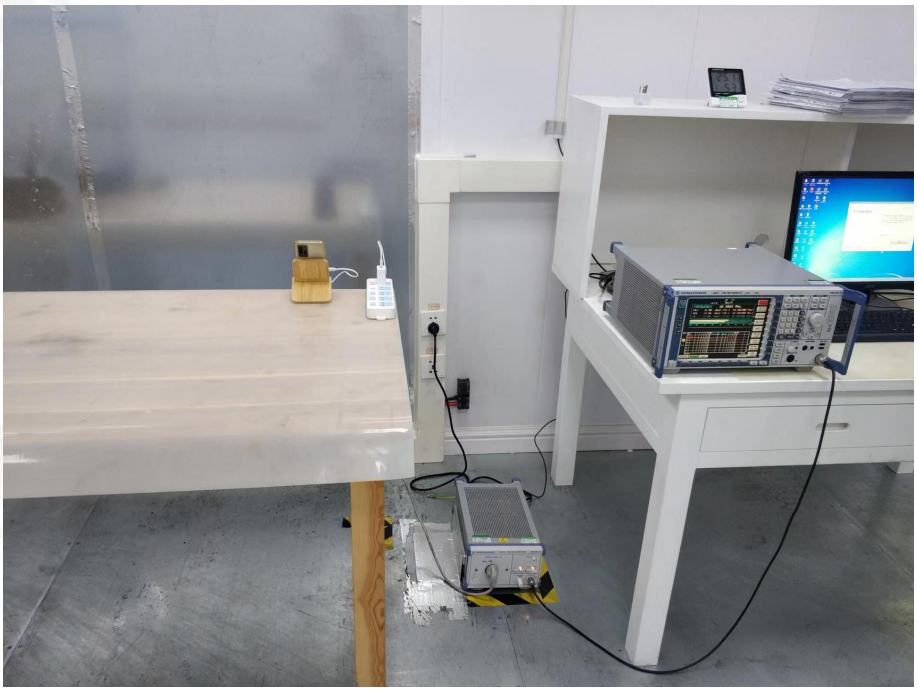

RE

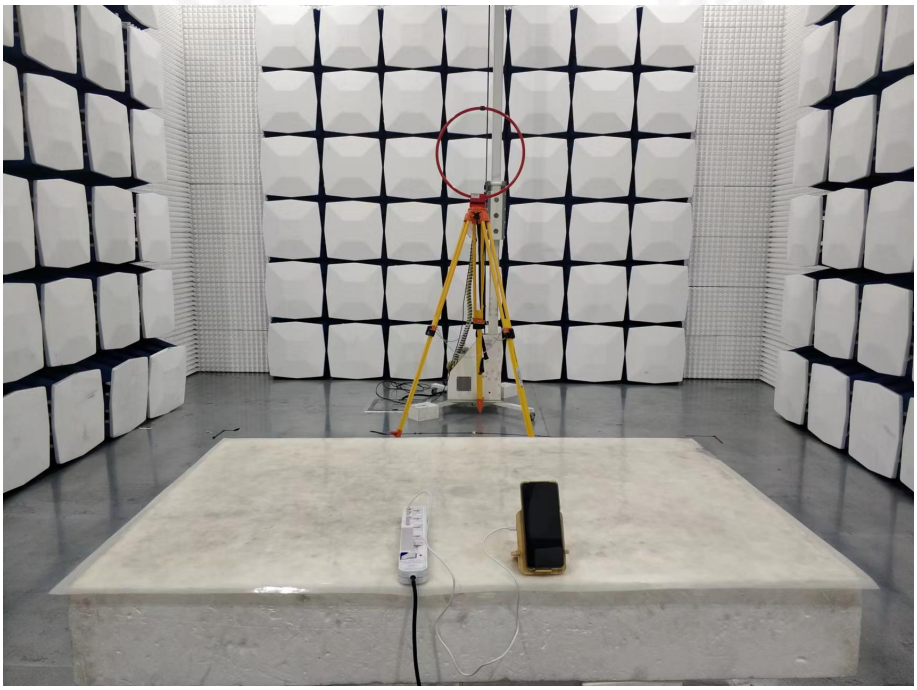

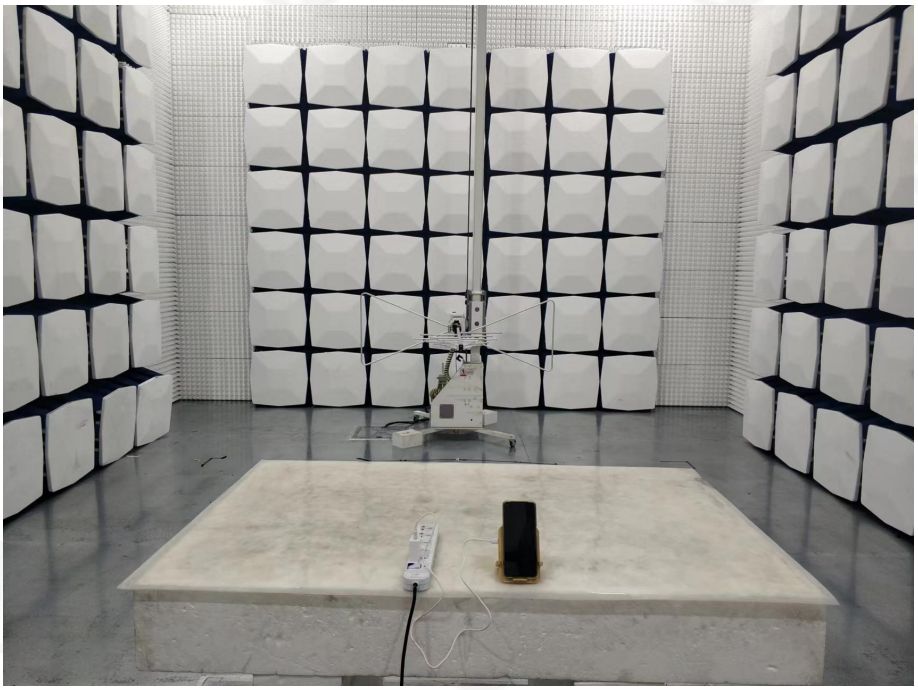

※※※※※ **END OF REPORT** ※※※※※