SRIAXNOL

Home Theater Projector

INSTRUCTION MANUAL

MODEL NO.: PJ132

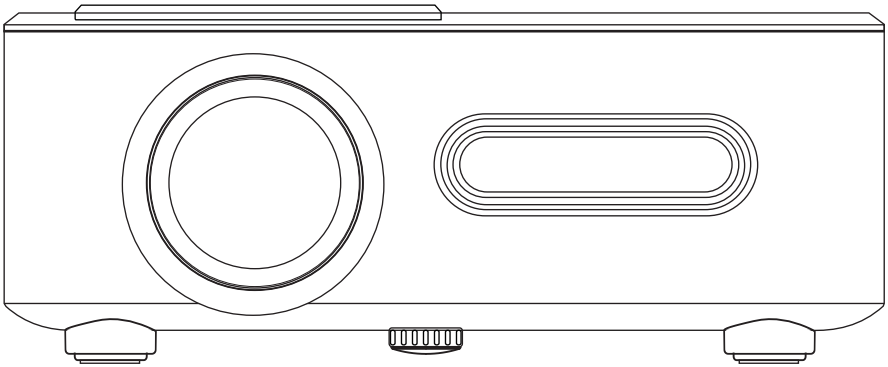

Email: support@SRIAXNOL.com

PLEASE READ BEFORE OPERATING THIS EQUIPMENT

Important Safety Instructions

1. Read these Instructions.
2. Keep these Instructions.
3. Heed all Warnings.
4. Follow all instructions.
5. Do not use this apparatus near water.
6. Clean only with a dry cloth.
7. Do not block any ventilation openings. Install in accordance with the manufacturer's instructions.
8. Do not install near any heat sources such as radiators, heat registers, stoves, or other apparatus (including amplifier) that product heat.
9. Protect the power cord from being walked on or pinched particularly at plugs, convenience receptacles, and the point where they exit from the apparatus.
10. Only use attachments/accessories specified by the manufacturer.
11. Unplug this apparatus during lightning storms or when unused for long periods of time.
12. Refer all servicing to qualified service personnel. Servicing is required when the apparatus has been damaged in any way, such as power-supply cord or plug is damaged, liquid has been spilled or objects have fallen into the apparatus, the apparatus has been exposed to rain or moisture, does not operate normally, or has been dropped.
13. Use only with a cart, stand, tripod, bracket, or table specified by the manufacturer or sold with the apparatus. When a cart is used, use caution when moving the cart/ apparatus combination to avoid injury from tip-over.

Additional Warnings and Precautions

1. Do not look directly into the projector light.
2. Don't touch the project lens.
3. Mains adapter is used as disconnect device and it should remain readily operable during intended use. In order to disconnect the apparatus from the mains completely, the mains plug should be disconnected from the mains socket outlet completely.
4. **CAUTION:** Use of controls or adjustments or performance of procedures other than those specified may result in hazardous radiation exposure.
5. **WARNING:** Changes or modified to this unit not expressly approved by the party responsible for compliance could void the user's authority to operate the equipment.
6. **WARNING:** Use of this unit near fluorescent lighting may cause interference regarding use of the remote. If the unit is displaying erratic behavior move away from any fluorescent lighting, as it may be the cause.
7. **WARNING:** Shock hazard - Do Not Open.
8. Caution and marking information is located at the rear or bottom of the apparatus.
9. **WARNING:** To reduce the risk of fire or electric shock, do not expose this apparatus to rain, moisture, dripping, or splashing.
10. Objects filled with liquids, such as vases, shall not be placed on the apparatus.

FCC Warning

Any Changes or modifications not expressly approved by the party responsible for compliance could void the user's authority to operate the equipment.
This device complies with Part 15 of the FCC rules. Operation is subject to the following two conditions: (1) this device may not cause harmful interference, and (2) this device must accept any interference received, including interference that may cause undesired operation.
NOTE: This equipment has been tested and found to comply with the limits for a Class B digital device, pursuant to Part 15 of the FCC Rules. These limits are designed to provide reasonable protection against harmful interference in a residential installation. This equipment generates, uses, and can radiate radio frequency energy and, if not installed and used in accordance with the instructions, may cause harmful interference to radio communications. However, there is no guarantee that interference will not occur in a particular installation. If this equipment does cause harmful interference to radio or television reception, which can be determined by turning the equipment off and on, the user is encouraged to try to correct the interference by one or more of the following measures:

- Reorient or relocate the receiving antenna.
- Increase the separation between the equipment and receiver.
- Connect the equipment into an outlet on a circuit different from that to which the receiver is connected.
- Consult the dealer or an experienced radio/TV technician for help.

FCC Radiation Exposure Statement:
This equipment complies with FCC radiation exposure limits set forth for an uncontrolled environment .This equipment should be installed and operated with minimum distance 20cm between the radiator& your body.
This transmitter must not be co-located or operating in conjunction with any other antenna or transmitter.

In The Box

Cleaning Cloth

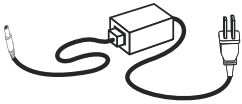

AC Power Adapter

Remote

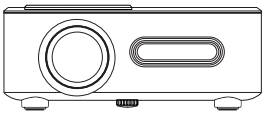

Main Unit

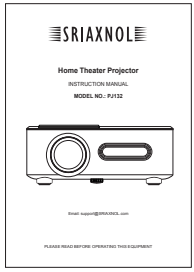

User Manual

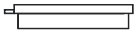

Lens Cover

HDMI Cable

Table of Contents

Important Safety Instructions - P1
Additional Warnings and Precautions - P2
FCC Warning - P3
In The Box - P3
Table of Contents - P4
Remove & Close The Lens Cover - P5
Placing of Your Projector - P5
To reduce Image Distortion - P6
Distance Between The Projector And Screen - P6
Installing Your Projector in the Ceiling - P6
Adjust The Vertical Location - P7
Adjust The Focus And Keystone - P7
Controls of Remote - P8
Install / Remove Batteries of Remote - P8
Controls of Projector - P9
Install Power Adapter - P10
Main Button Operation - P10
Connect HDMI Show The Image On Projector Screen - - - - - - - - - - - - - - - - - - P11
Connect AV Show The Image On Projector Screen - P11
Connect VGA Show The Image On Projector Screen - - - - - - - - - - - - - - - - - - P12
Connect Audio Output (Aux Out / Line Out / Earphones) - - - - - - - - - - - - - - P13
Install USB Device And TF (Micro SD) Card - P13
Using TF Card And USB Playback (Media Player) - P14
Using Bluetooth Playback - P15
Multi-screen interactive connection for phone and projector - - - - - - - - - - - P16
WiFi Connection - P16
Screen Mirroring for Android System (With WiFi) - P16
Screen Mirroring for Android System (Without WiFi) - - - - - - - - - - - - - - - - - - P16
Screen Mirroring for iOS System (With WiFi) - P17
Screen Mirroring for iOS System (Without WiFi) - P17
WiFi Setting Menu - P17
Using Projector Menu 1 - P18
Using Projector Menu 2 - P18
Using Projector Menu 3 - P19

Remove & Close The Lens Cover

Remove the lens cover before using

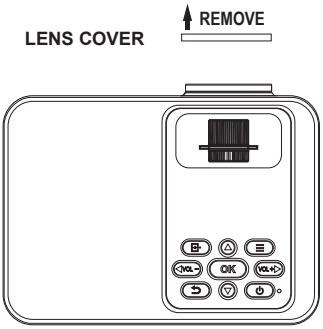

Close the lens cover when unit is not using

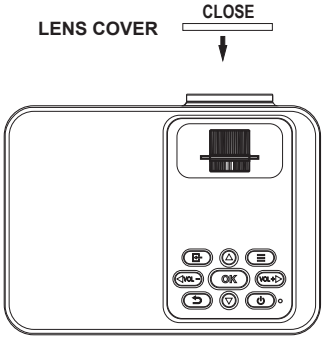

Placing of Your Projector

Your projector can be installed in four different configurations (see picture below):

Front Table

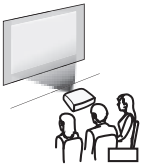

Front Table:
Select this location with the projector placed near the floor in front of the screen. This is the most common way to position the projector for quick setup and portability.

Rear Table

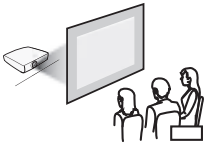

Rear Table:
Select this location with the projector placed near the floor behind the screen.
NOTE: That a special rear projection screen is required.

Front Ceiling

Front Ceiling:
Select this location with the projector suspended upside-down from the ceiling in front of the screen.
NOTE: A projector mount is required to install the projector in a ceiling.

Rear Ceiling

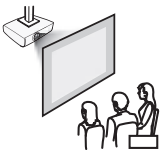

Rear Ceiling:
Select this location with the projector suspended upside-down from the ceiling behind the screen.
NOTE: A projector mount is required to install the projector in a ceiling.
A special rear projection screen is required.

To reduce Image Distortion

- Move the projector as close to the center of the screen as possible.
- The light beam from the projector should be perpendicular to the screen for a rectangular or square image.

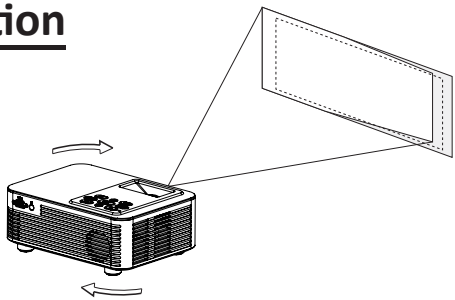

Distance Between The Projector And Screen

Measure the distance between the projector and where you want to position the screen. This is the projection distance.

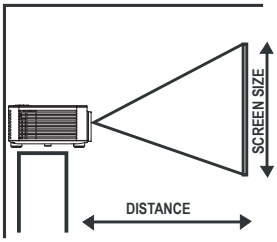

Distance	Screen Size
1.16m	36 inch
1.35m	45 inch
1.51m	50 inch
1.79m	60 inch
2.15m	72 inch
2.81m	100 inch
3.43m	120 inch
4.44m	150 inch

Installing Your Projector in the Ceiling

When installing the projector in the ceiling, please purchase a projector mount recommended by an installation professional and follow the instructions that come with the mount.

Before installing the projector in the ceiling, please check to make sure the ceiling structure can support the weight of the projector and the mount. If in doubt, please ask the advice from an installation professorial.

NOTE: Projector mount and screw(s) not included.

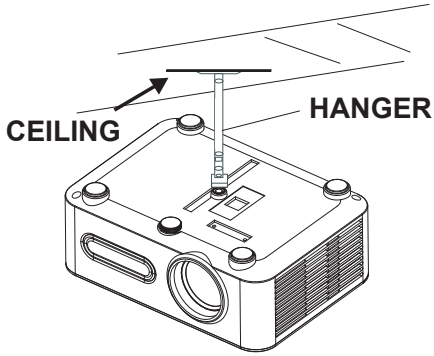

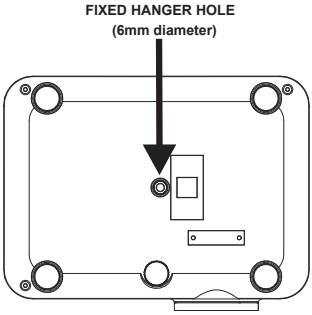

Adjust The Vertical Location

Follow below picture to adjust the vertical location.

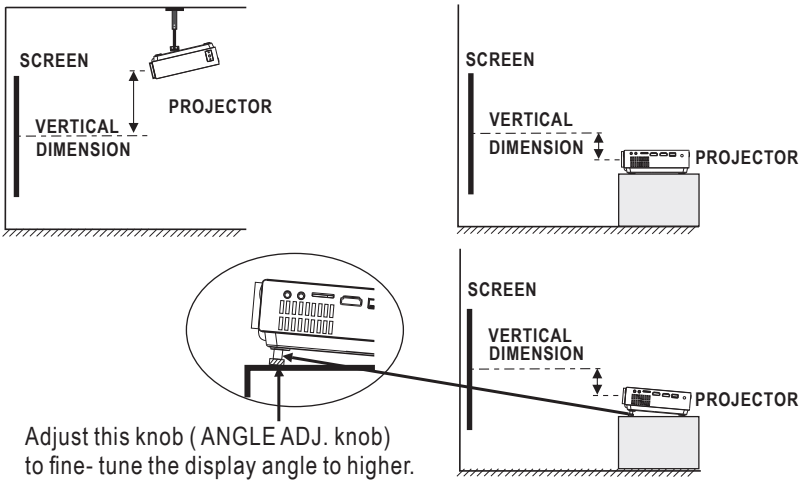

Adjust The Focus And Keystone

Follow below picture to adjust the focus and trapezoidal screen.

Adjust the focus by turning the knob while observing the image pixels near the center of the screen. Optimal focus is obtained when the pixels are clearly visible. Depending on the projected screen size, the focus near the screen edges may be less sharp than the screen center.

Keystone image is created when the projector lens is projected from above or below the center of the screen. Keystone correction restores the distorted image to a rectangular or square shape.

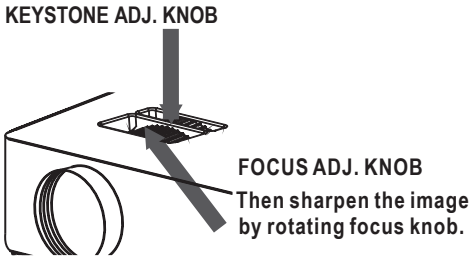

Controls of Remote

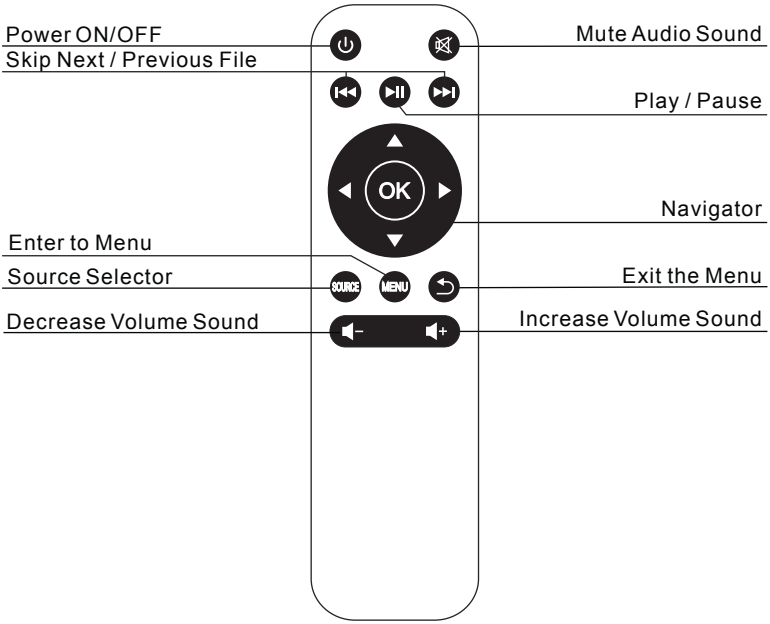

Install / Remove Batteries of Remote

Remove the battery compartment cover on the back of your remote by carefully sliding to open. The battery cover can then be lifted away. Fit the correct batteries (not included), referring to the polarity markings. Finally, replace the cover.

NOTES:

- Batteries shall not be exposed to excessive heat such as placing under the sunlight or near a fire.
- Please make sure the batteries are installed with their correct polarities.
- Do not mix old and new batteries.
- Use only the same type of batteries.
- Do not dispose of the batteries in fire, battery may explode or leak.
- Do not recharge a non-rechargeable battery.

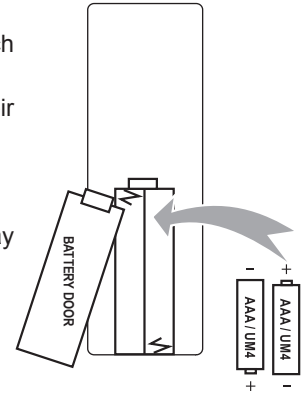

Controls of Projector

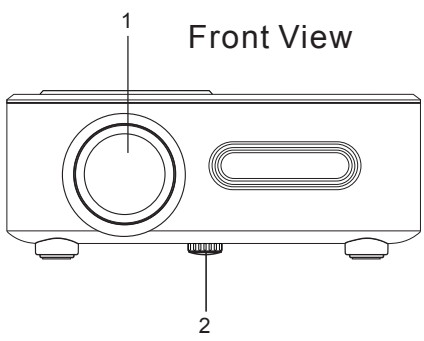

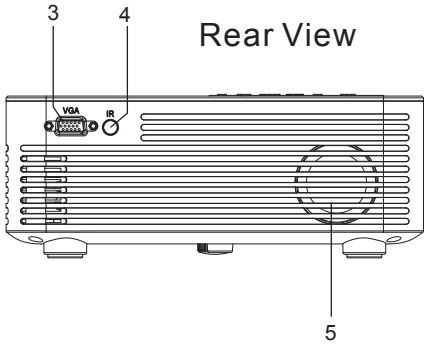

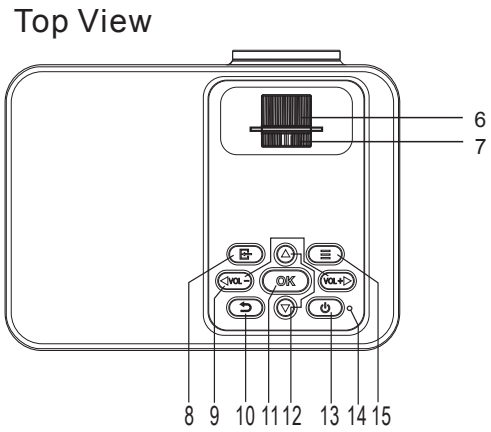

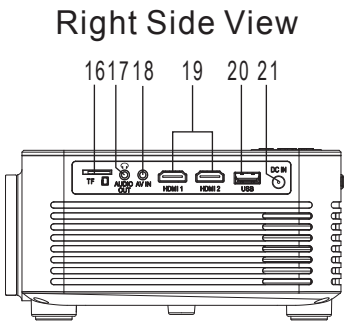

1	LENS	12	▲ ▼ Button
2	ANGEL ADJ. Knob	13	POWER ⏻ Button
3	VGA IN Port	14	POWER Indicator
4	IR Sensor (Rear)	15	MENU ☰ Button
5	SPEAKER	16	TF Card Slot
6	FOCUS ADJ. Knob	17	Audio Out Jack
7	TRAPEZODAL ADJ. Knob	18	AV IN Jack
8	SOURCE Buttonn	19	HDMI 1 & 2 Ports
9	◀ Vol- Vol+ ▶ Button	20	USB Port
10	RETURN ⮌ Button	21	DC IN Jack
11	(OK) Button		

Install Power Adapter

Follow below picture to connect power adapter.

1. Insert the DC plug of the adaptor into the DC IN JACK on the side of the unit.
2. Plug the AC power cord of small plug side to AC input socket of adaptor.
3. Plug the AC power cord of AC plug side into the 120V AC outlet.

WARNING:

Before connecting to the power supply, ensure that the supply corresponds to the information on the rating label at the back of the apparatus.

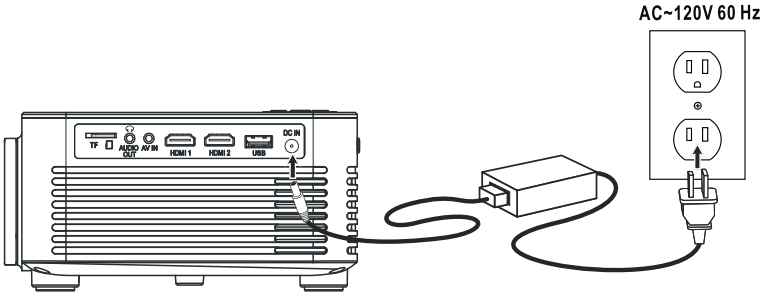

Main Button Operation

⏻ - Press the button to switch on unit, press again to turn off.

/ SOURCE - Press the button to select input source.

/ MENU - Press the button to enter projector menu.

- Press the buttons to navigate and select screen item of menu.

- Press the button to return to previous status or exit the menu.

+ / − - Press the buttons to select the sound level on the remote.

Vol- / Vol+ - Press the buttons to select the sound level on the panel.

- Press to mute the audio. Press again to resume.

/ - Press the buttons to search next or previous file on USB / TF.

- Press the button to play/pause the playback of file on USB / TF card.

Connect HDMI Show The Image On Projector Screen

Refer to the following picture to connect a set top box, a BD/DVD player or a streaming player to the HDMI input.

1. Turn off the unit before connect HDMI cable.
2. After connection, press the ⏻ button to turn on unit and power indicator will light GREEN.
3. In home screen, use ⊞⊞/⊙ buttons to select HDMI 1 or HDMI 2 icon and press the OK button to enter. If not in home screen, press the ⇥ **/ SOURCE** button to enter.
4. The video from the connected device will be shown on projector screen.
5. Press the ⏻ button to turn off unit power.

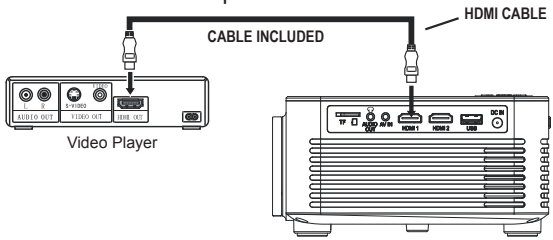

Important Note:
If there is no sound from the internal speakers when playing media contents from a set top box, BD/DVD or streaming players connecting to the HDMI input, please check the set top box or the player's digital audio settings and make sure it is set to "PCM Stereo" mode.

Note: If hot plug cause the unit hang up or malfunction, reset the unit by unplug the DC IN power jack at the rear right side of the unit. Wait for 10 seconds before reconnecting the power and turning the unit back on.

Connect AV Show The Image On Projector Screen

Follow below picture to connect AV cable and device.

1. Turn off the unit before connect AV cable.
2. Use AV cable to connect follow below figure.
3. After connect, press the ⏻ button to turn on unit and power indicator will light GREEN
4. In home screen, use ⊞⊞/⊙ buttons to select AV icon and press the OK button to enter. If not in home screen, press the ⇥ **/ SOURCE** button to enter.
5. The video of AV device will show on projector screen.
6. Press the ⏻ button to turn off unit power.

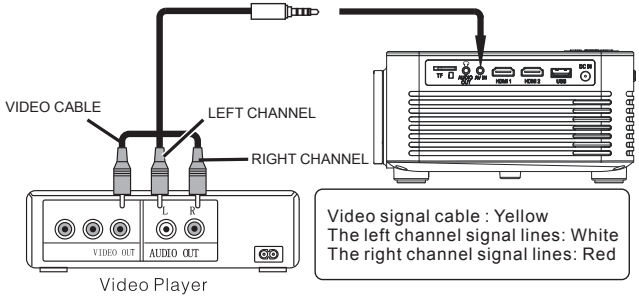

Note: If hot plug cause the unit hang up or malfunction, reset the unit by unplug the DC IN power jack at the rear right side of the unit. Wait for 10 seconds before reconnecting the power and turning the unit back on.

Connect VGA Show The Image On Projector Screen

Follow below picture to connect VGA cable and device.

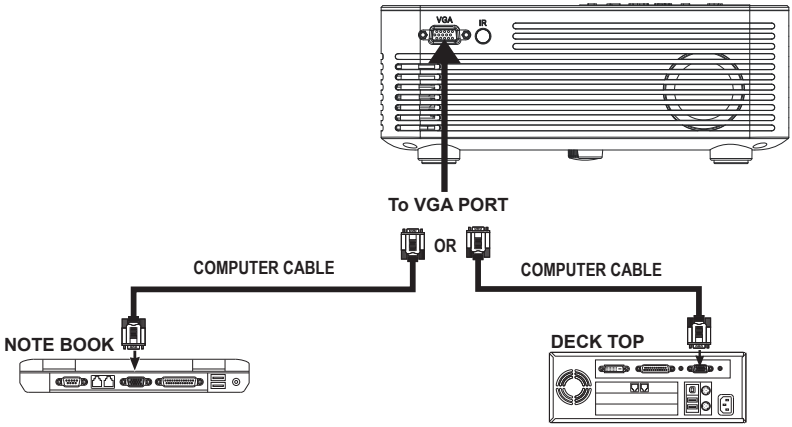

1. Turn off the unit before connect VGA cable.
2. Press the ⏻ button to turn off power of your projector before connection.
3. After connect, press the ⏻ button to turn on unit and power indicator will light GREEN
4. In home screen, use ◄ ► / ⊙ buttons to select VGA icon and press the OK button to enter. If not in home screen, press the ⇥ **/ SOURCE** button to enter.
5. The video of VGA device will show on projector screen.
6. Press the ⏻ button to turn off unit power.

Please refer to the following table to adjust the output signal from computer

Type	Resolution		Line Frequency (KHz)	Field Frequency (Hz)
PC	VGA	640x480	31.5	60
			34.7	70
			37.9	72
			37.5	75
	SVGA	800x600	31.4	50
			35.1	56
			37.9	60
			46.6	70
			48.1	72
			46.9	75
	XGA	1024x768	40.3	50
			48.4	60
			56.5	70
	SXGA	1280x1024	63.9	60
			79.9	75

NOTE:
1. **VGA connections do not support audio. You will need to use the laptop or computer's connected speakers.**
2. **If hot plug cause the unit hang up or malfunction, reset the unit by unplug the DC IN power jack at the rear right side of the unit. Wait for 10 seconds before reconnecting the power and turning the unit back on.**

Connect Audio Output (Aux Out/Line Out/Earphones)

Follow below picture to connect audio cable and device.

1. Press the ⏻ button to turn off power of your projector before connection.
2. Use audio cable to connect follow below figure.
3. After connect and turn on both units. Your projector sound from external device now.
4. After using, turn off both unit.

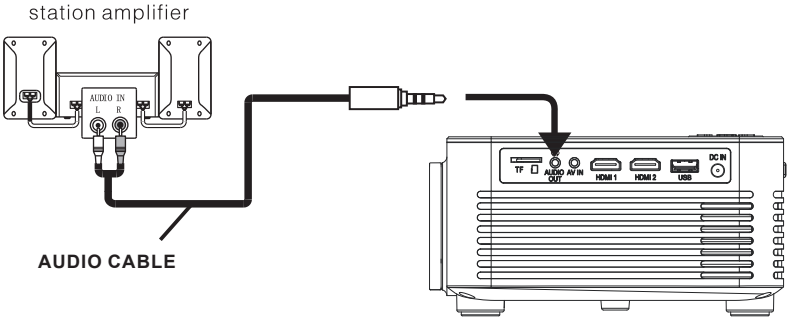

Important Note:

If there is no sound from the stereo audio output when playing media contents from a set top box, BD/DVD or streaming players connecting to the HDMI input, please check the set top box or the player's digital audio settings and make sure it is set to "PCM Stereo" mode.

Note: If hot plug cause the unit hang up or malfunction, reset the unit by unplug the DC IN power jack at the rear right side of the unit. Wait for 10 seconds before reconnecting the power and turning the unit back on.

Install USB Device And TF (Micro SD) Card

Follow below picture to install USB and TF card.

Turn off the unit before install USB / TF card.

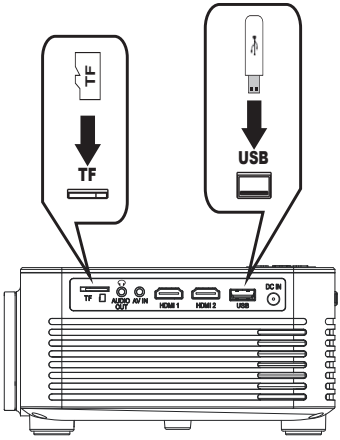

Note: This USB port is only used to read USB flash disk. DO NOT use it to charge any external equipment.

Using TF Card And USB Playback (Media Player)

Install USB / TF device:

1. Turn off the unit before install USB / TF card.
2. Install the USB device into USB port / Install the TF device into TF slot.
3. After install, press the ⏻ button to turn on unit and the power indicator light GREEN.
4. In home screen, use buttons to select MOVIE / PHOTO / MUSIC / TEXT icon and press the OK button to enter. If not in home screen, press the **/ SOURCE** button to enter.
5. If necessary, use the ◀/▶ button to select C or D and press OK button to enter.
6. Use buttons to search the correct file to preview and press the OK button to playback file.
7. Press ⏮/⏭ button to search next or previous file.
8. During playback, press the ⏯ button to pause and press again to resume.
9. Press the ↩ **/ EXIT** button to exit.

NOTE: Before remove USB / TF device, press the ⏻ button to turn off power **FIRST.**

Sub-Menu on Movie screen	
1. When movie playback, press the OK button and more function screen show on lower (figure 1). 2. Use the ◀/▶ button to select icon and press the OK button to play special function.	Figure 1. Pause, FB, FF, Prev, Next, Stop, Repeat All, Set A, Playlist, Info, Slow, Step, GotoTime, Zoom In, Zoom Out, Aspect
Sub-Menu on Music screen	
1. When music playback, press the OK button and more function screen show on lower (figure 2). 2. Use the ◀/▶ button to select icon and press the OK button to play special function.	Figure 2. Pause, FB, FF, Prev, Next, Stop, Repeat All, Mute, Playlist, Info, GotoTime
Sub-Menu on Photo screen	
1. When photo playback, press the OK button and more function screen show on lower (figure 3). 2. Use the ◀/▶ button to select icon and press the OK button to play special function.	Figure 3. Pause, Prev, Next, Stop, Repeat All, Music Off, Playlist, Info, Rotate, Rotate, Zoom In, Zoom Out, Move, Music S...
Sub-Menu on Text screen	
1. When text playback, press the OK button and more function screen show on lower (figure 4). 2. Use the ◀/▶ button to select icon and press the OK button to play special function.	Figure 4. Previous..., Next Page, Prev, Next, Stop, Music Off, Playlist, Info, Music S...

Note: If hot plug cause the unit hang up or malfunction, reset the unit by unplug the DC IN power jack at the rear right side of the unit. Wait for 10 seconds before reconnecting the power and turning the unit back on.

Using Bluetooth Playback

Pairing is the term used when two Bluetooth devices are connected wirelessly for the first time. This allows the devices to see each other and sets up a one to one communication channel between both devices.

Bluetooth Connection

1. Turn on your External Bluetooth Speaker and select to Bluetooth pairing mode.
   Note: The effective distance between your external device and projector is within 10 meters (30 feet).
2. Press the ⏻ button to turn on unit.
3. Press the ☰ / **MENU** button to enter the projector menu screen.
4. Use the ◀ / ▶ button to select **Sound** menu.
5. Use the ▲ / ▼ button to select **BT Setting** column as figure 1.
6. Press the OK button to enter BT Setting menu and use ▲ / ▼ buttons to select On. (If BT Setting is On, press the OK button to enter BT Setting menu.)
7. Unit will try to reconnect the previous Bluetooth device, if it is connected before. If not, select **Search BT** and press OK button to search device.
8. Wait a while, the available Bluetooth speaker device name will show in a list as figure 2. (For example: XXXXXX, YYYYYY, ZZZZZZ and etc.)

Sound Mode Standard	
Treble	50
Bass	50
Balance	0
BT Setting	Off

Figure 1

BT Setting
Off
Disconnect / Search
BT XXXXXX
YYYYYY
ZZZZZZ

Figure 2

9. Use the ▲ / ▼ buttons to select your desired Bluetooth speaker device and press OK button to connect. (Make sure your Bluetooth headset/audio is connecting)
10. A few seconds, an indicator sound will be heard that your projector and external Bluetooth speaker connected. At the same time, there is “C:XXXXXX” to indicate the connected device on the BT Setting menu. Then press ⮌ button to exit.
11. After connection completed, you can listen to music by your Bluetooth receiver device such as a headphone or speaker wirelessly.
12. If you want to change to pair with another Bluetooth Enabled Device, please repeat above step 3 to step 10.

Notes:

1) After connecting, Bluetooth device’s name will be stored and will automatically connect for next time.
2) Projector Bluetooth (Transmitter) function can only pair with Bluetooth receiver such as headphone or speaker for music streaming wirelessly. Use your Bluetooth device volume control if necessary.

Disconnect the Bluetooth

1. Press the ☰ / **MENU** button to enter the menu screen.
2. Use the ◀ / ▶ buttons to select **Sound** menu.
3. Use the ▲ / ▼ buttons to select BT Setting and press OK button to enter BT Setting menu.
4. Use the ▲ / ▼ buttons to select Off and press the OK button to disconnect the Bluetooth function. Then press ⮌ button to exit.

Multi-screen interactive connection for phone and projector

WiFi Connection

In home screen, use buttons to select MIRACAST icon and press OK button to enter. If not in home screen, press the **/ SOURCE** button to enter.

1. In “Waiting for connection…” page, press OK button to enter WiFi setting menu.
2. In WIFI Setting menu, select WiFi and press OK button, unit will search available WiFi and show on the screen.
3. Choose the available local WiFi router and input password to connect (using buttons to input password).
4. If unit success to connect the WiFi, it will show the “ ✓ ” behind the desired local WiFi name on the screen.

5. Press button twice to return “Waiting for connection…” page for iOS/Android screen mirroring.
6. If you want to connect another WiFi, repeat above step #1-3.

Note: When the router is successfully connected, the projector will automatically connect to the router next time.

Screen Mirroring for Android System (With WiFi)

Follow above WIFI Connection section. Then connect your Android mobile device to the same WiFi router.

Airplay Function:

1. Play the video on the video app on the mobile, click Projection Screen “ TV ” icon and select “PROJECTOR-XXXXXX-DMR” on the mobile settings.
2. After connected, the video / movie will be projected on the projector screen.

Screen Mirroring:

1. Swipe down from the top of your mobile, click Multi-Screen “ ” icon and select “PROJECTOR-XXXXXX” on the mobile settings.
2. After connected, the mobile device contents will mirror on the projector screen.

Screen Mirroring for Android System (Without WiFi)

Make sure the projector disconnect to any WiFi. If connected before, press OK button to enter WIFI Setting menu to select connected WiFi to forget WiFi and return to waiting for connection… page.

Screen Mirroring:

1. Swipe down from the top of your mobile, Click Multi-Screen “ ” and select “PROJECTOR-XXXXXX” on the mobile settings.
2. After connected, the mobile device contents will mirror on the projector screen.

Note:

1. Without WiFi connection, only support screen mirroring function. Please connect WiFi if you want to airplay. WiFi connection method please see WiFi connection section on previous page.
2. Different mobile models with different names of screen mirroring function, for examples: Multi-screen, Wireless Display, Screen Mirroring, Smart View etc…
3. XXXXXX is the projector device no. which show on the upper left corner of the “Waiting for connection…” page.

Screen Mirroring for iOS System (With WiFi)

Follow above WIFI Connection section. Then connect your iOS mobile device to the same WiFi router.

Airplay Function:

1. Play the video on the video app on the mobile, click Projection Screen " " icon and select "PROJECTOR-XXXXXX-DMR" on the mobile settings.
2. After connected, the video / movie will be projected on the projector screen.

Screen Mirroring:

1. Swipe up from the bottom of your mobile, click Screen Mirror " " icon and select "PROJECTOR-XXXXXX" on the mobile settings.
2. After connected, the mobile device contents will mirror on the projector screen.

Screen Mirroring for iOS System (Without WiFi)

Make sure the projector disconnect to any WiFi. If connected before, press OK button to enter WIFI Setting menu to select connected WiFi to forget WiFi and return to waiting for connection… page.

Screen Mirroring:

1. Turn on WiFi on your iOS device, click "PROJECTOR-XXXXXX" and input the password 12345678 to connect.
2. Swipe up from bottom of your mobile, click Screen Mirror " " icon and select "PROJECTOR-XXXXXX" on the mobile settings.
3. After connected, the mobile device contents will mirror on the projector screen.

Note:

1. Without WiFi connection, only support screen mirroring function. Please connect WiFi if you want to airplay. WiFi connection method please see WiFi connection section on previous page.
2. XXXXXX is the projector device no. which show on the upper left corner of the "Waiting for connection…" page.

iOS Data Cable Screen Mirroring:

Select the MIRACAST function in the main interface, connect your iOS device directly to the projector using the USB cable, click "Trust" in the pop-up box on your phone screen to complete the screen mirroring

WiFi Setting Menu

In home screen, use / buttons to select MIRACAST icon and press OK button to enter "Waiting for connection…" page. Then press OK button to enter WIFI Setting menu.

Use UP ▲ button or DOWN ▼ button to move through and select desired WiFi, Mirror Setting, OTA and Reset.

1. WiFi
   Select desired local WiFi router to connect.
2. Mirror Setting
   Select Airplay or Screen Mirroring.
3. OTA
   Select it for Screen Mirroring software update.
4. Reset
   Reset the Screen Mirroring and restore all of the default settings.

Using Projector Menu 1

Press ☰ /**MENU** button to enter projector menu. Press ◀／▶ buttons to select **PICTURE** menu.

Picture Mode	**Standard**
Contrast	**50**
Brightness	**50**
Color	**50**
Sharpness	**50**
Color Temperature	**Medium**
Noise Reduction	**Middle**

This **Picture** menu showed on right upper of view screen.

USE ▲／▼ TO SELECT

Picture Mode Standard — PRESS OK

Use ▲／▼ to select different picture effect to Standard / Dynamic / Mild / User. Use ▲／▼ to selectand ◀／▶ to adjustContrast/ Brightness/ Color / Sharpnessdigit If choseUser item.

USE ▲／▼ TO SELECT

Contrast 50 — PRESS OK

Use ◀／▶ button toadjust Contrast level 0 to 100. (Active in User item of Picture Mode).

USE ▲／▼ TO SELECT

Brightness 50 — PRESS OK

Use ◀／▶ button toadjust Brightness level 0 to 100. (Active in User item of Picture Mode).

USE ▲／▼ TO SELECT

Color 50 — PRESS OK

Use ◀／▶ button toadjust Color level 0 to 100.(Active in User item of Picture Mode).

USE ▲／▼ TO SELECT

Sharpness 50 — PRESS OK

Use ◀／▶ button toadjust Sharpness level 0 to 100. (Active in User item of Picture Mode).

USE ▲／▼ TO SELECT

Color Temperature Medium — PRESS OK

Use ▲／▼ button to select different color temperature to Cool / Medium / Warm.

USE ▲／▼ TO SELECT

Noise Reduction Middle — PRESS OK

Use ▲／▼ button to select Off / Low / Middle / High .

Using Projector Menu 2

Press ☰/**MENU** button to enter projector menu, press ◀／▶ buttons to select **SOUND** menu.

Sound Mode	**Standard**
Treble	**50**
Bass	**50**
Balance	**0**
BT Setting	**Off**

This **Sound** menu showed on right upper of view screen.

USE ▲／▼ TO SELECT

Sound Mode Standard — PRESS OK

Use ▲／▼ button to select different sound effect Standard / Movie / Music / Sports / User. Use ▲／▼ to select and ◀／▶ to adjust Treble and Bass digit if chose User item.

USE ▲／▼ TO SELECT

Treble 50 — PRESS OK

Use ◀／▶ button to select Treble level 0 to 100. (Active in User item of Sound Mode).

USE ▲／▼ TO SELECT

Bass 50 — PRESS OK

Use ◀／▶ button to select Bass level 0 to 100. (Active in User item of Sound Mode).

USE ▲／▼ TO SELECT

Balance 0 — PRESS OK

Use ◀／▶ button to select Balance level to -50 to +50.

USE ▲／▼ TO SELECT

BT Setting Off — PRESS OK

Use ▲／▼ button to select BT On / Off.

Using Projector Menu 3

Press ☰ **/MENU** button to enter projector menu, press ◀/▶ buttons to select **OPTION** menu.

OSD Language	**English**
Flip	**Front Table**
Aspect Ratio	**16:9**
Restore Factory Default	
Software Update (USB)	

This **OPTION** menu showed on right upper of view screen.

USE ▲/▼ TO SELECT

OSD Language English PRESS OK — Use ◀/▶ button to select different language.

USE ▲/▼ TO SELECT

Flip Front Table PRESS OK — To select different project direction Front Table / Front Ceiling / Rear Table / Rear Ceiling.

USE ▲/▼ TO SELECT

Aspect Ratio 16:9 PRESS OK — Use ▲/▼ button to select different Aspect Ratio 4:3 / 16:9 / Full Follow below figure.

USE ▲/▼ TO SELECT

Restore Factory Default PRESS OK — Use ◀/▶ button to select Y or N. If choose “Y” that your unit will go to factory default setting.

USE ▲/▼ TO SELECT

Software Update (USB) PRESS OK — For service center use only.

Aspect Ratio	
AV mode	4:3, 16:9, Full, Panorama
HDMI mode	4:3, 16:9, Full, Panorama, Just Scan
VGA mode	4:3, 16:9, Full
USB / TF input (movie mode)	4:3, 16:9, Full, Panorama, Just Scan

DISCLAIMER

Unless specifically agreed to in writing, SRIAXNOL:

A. SRIAXNOL makes no warranty as to the accuracy, suffciency or suitability of any technical or other information provided in its manuals or other documentation.

B. SRIAXNOL assumes no responsibility or liability for loss or damage, whether direct, indirect, consequential or incidental, which might arise out of the use of such information. The use of any such information will be entirely at the user’s risk.