MODEL NO. : PJ-168

Home Theater Projector with Bluetooth

INSTRUCTION MANUAL

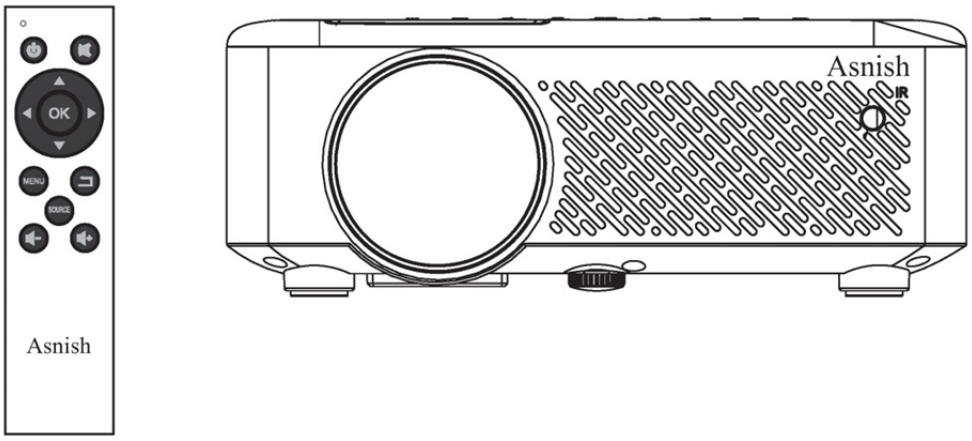

PLEASE READ BEFORE OPERATING THIS EQUIPMENT

Important Safety Instructions

1. Read these Instructions.
2. Keep these Instructions.
3. Heed all Warnings.
4. Follow all instructions.
5. Do not use this apparatus near water.
6. Clean only with a dry cloth.
7. Do not block any ventilation openings. Install in accordance with the manufacturer's instructions.
8. Do not install near any heat sources such as radiators, heat registers, stoves, or other apparatus (including amplifier) that product heat.
9. Protect the power cord from being walked on or pinched particularly at plugs, convenience receptacles, and the point where they exit from the apparatus.
10. Only use attachments/accessories specified by the manufacturer.
11. Unplug this apparatus during lightning storms or when unused for long periods of time.
12. Refer all servicing to qualified service personnel. Servicing is required when the apparatus has been damaged in any way, such as power-supply cord or plug is damaged, liquid has been spilled or objects have fallen into the apparatus, the apparatus has been exposed to rain or moisture, does not operate normally, or has been dropped.
13. Use only with a cart, stand, tripod, bracket, or table specified by the manufacturer or sold with the apparatus. When a cart is used, use caution when moving the cart/ apparatus combination to avoid injury from tip-over.

Additional Warnings and Precautions

1. Do not look directly into the projector light.
2. **Don’t touch the project lens**
3. Mains adapter is used as disconnect device and it should remain readily operable during intended use. In order to disconnect the apparatus from the mains completely, the mains plug should be disconnected from the mains socket outlet completely.
4. **CAUTION:** Use of controls or adjustments or performance of procedures other than those specified may result in hazardous radiation exposure.
5. **WARNING:** Changes or modified to this unit not expressly approved by the party responsible for compliance could void the user’s authority to operate the equipment.
6. **WARNING:** Use of this unit near fluorescent lighting may cause interference regarding use of the remote. If the unit is displaying erratic behavior move away from any fluorescent lighting, as it may be the cause.
7. **WARNING:** Shock hazard - Do Not Open.
8. Caution and marking information is located at the rear or bottom of the apparatus.
9. **WARNING:** To reduce the risk of fire or electric shock, do not expose this apparatus to rain, moisture, dripping, or splashing.
10. Objects filled with liquids, such as vases, shall not be placed on the apparatus.

FCC Warning

Any Changes or modifications not expressly approved by the party responsible for compliance could void the user's authority to operate the equipment.

This device complies with Part 15 of the FCC rules. Operation is subject to the following two conditions: (1) this device may not cause harmful interference, and (2) this device must accept any interference received, including interference that may cause undesired operation.

NOTE: This equipment has been tested and found to comply with the limits for a Class B digital device, pursuant to Part 15 of the FCC Rules. These limits are designed to provide reasonable protection against harmful interference in a residential installation. This equipment generates, uses, and can radiate radio frequency energy and, if not installed and used in accordance with the instructions, may cause harmful interference to radio communications. However, there is no guarantee that interference will not occur in a particular installation. If this equipment does cause harmful interference to radio or television reception, which can be determined by turning the equipment off and on, the user is encouraged to try to correct the interference by one or more of the following measures:

- Reorient or relocate the receiving antenna.
- Increase the separation between the equipment and receiver.
- Connect the equipment into an outlet on a circuit different from that to which the receiver is connected.
- Consult the dealer or an experienced radio/TV technician for help.
- This equipment complies with FCC radiation exposure limits set forth for an uncontrolled environment .This equipment should be installed and operated with minimum distance 20cm between the radiator& your body.
- This transmitter must not be co-located or operating in conjunction with any other antenna or transmitter.

In The Box

Remote
AC Power Adapter
Main Unit
HDMI Cable
Lens Cover
User Manual

Table of Contents

Important Safety Instructions - P1

Additional Warnings and Precautions - P2

FCC Warning - P3

In The Box - P3

Table of Contents - P4

Remove & Close The Lens Cover - P5

Placing of Your Projector - P5

To Reduce Image Distortion - P6

Distance Between The Projector And Screen - - - - - - - - - - - - - - - - - P6

Installing your Projector in the Ceiling - P6

Adjust the Vertical Location - P7

Adjust the Focus And Keystone - P7

Controls of Remote - P8

Install / Remove Batteries of Remote - P8

Controls of Projector - P9

Install Power Adapter - P10

Main Button Operation - P10

Connect HDMI show The Image On Projector Screen - - - - - - - - - P11

Connect AV Show The Image On Projector Screen - - - - - - - - - - - P11

Connect VGA Show The Image On Projector Screen - - - - - - - - - - P12

Connect Audio Output (Aux Out / Line Out / Earphones) - - - - - - - P13

Install USB Device And TF card (Micro SD Card) - - - - - - - - - - - - - P13

Using TF Card and USB Playback (Media Player)- - - - - - - - - - - - - - P14

Using Bluetooth Playback - P15

Multi-screen interactive connection for phone and projector - - - - P16

Using Projector Menu 0 - P18

Using Projector Menu 1 - P18

Using Projector Menu 2 - P19

Using Projector Menu 3 - P19

Specifications - P20

Remove & Close The Lens Cover

Remove the lens cover before using

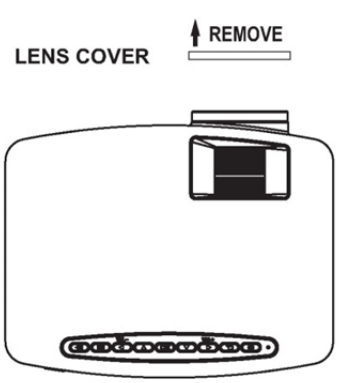

Close the lens cover when unit is not using

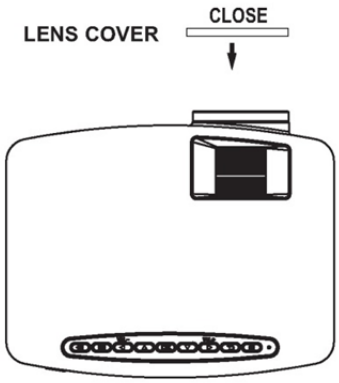

Placing of Your Projector

Your projector can be installed in four different configurations (see picture below):

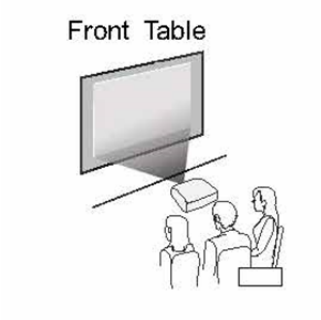

Front Table:
Select this location with the projector placed near the floor in front of the screen. This is the most common way to position the projector for quick setup and portability.

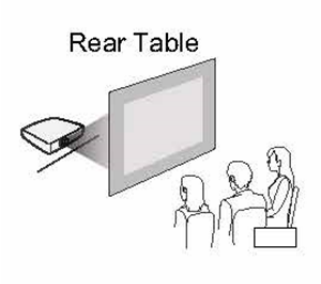

Rear Table:
Select this location with the projector placed near the floor behind the screen.
NOTE: That a special rear projection screen is required.

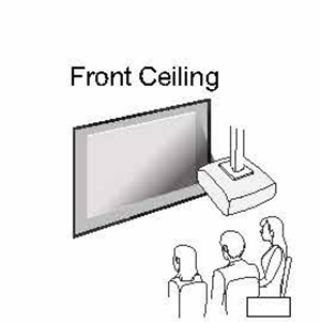

Front Ceiling:
Select this location with the projector suspended upside-down from the ceiling in front of the screen.
NOTE: A projector mount is required to install the projector in a ceiling.

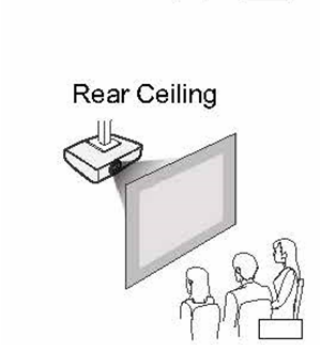

Rear Ceiling:
Select this location with the projector suspended upside-down from the ceiling behind the screen.
NOTE:
A projector mount is required to install the projector in a ceiling.
A special rear projection screen is required.

To reduce Image Distortion

- Move the projector as close to the center of the screen as possible.
- The light beam from the projector should be perpendicular to the screen for a rectangular or square image.

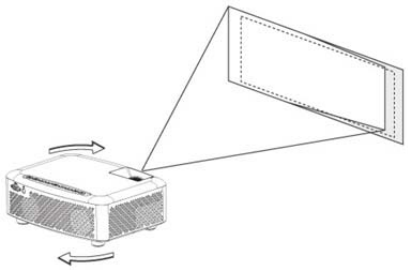

Distance Between The Projector And Screen

Measure the distance between the projector and where you want to position the screen. This is the projection distance.

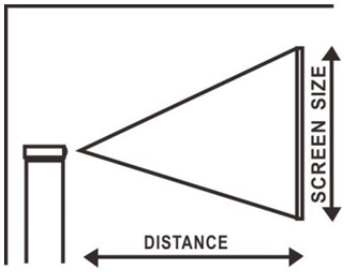

Distance	Screen Size
1.16m	**36 inch**
1.35m	**45 inch**
1.51m	**50 inch**
1.79m	**60 inch**
2.15m	**72 inch**
2.81m	**100 inch**
3.43m	**120 inch**
4.44m	**150 inch**

Installing your Projector in the Ceiling

When installing the projector in the ceiling, please purchase a projector mount recommended by an installation professional and follow the instructions that come with the mount.

Before installing the projector in the ceiling, please check to make sure the ceiling structure can support the weight of the projector and the mount. If in doubt, please ask the advice from an installation professorial.

NOTE: Projector mount and screw(s) not included

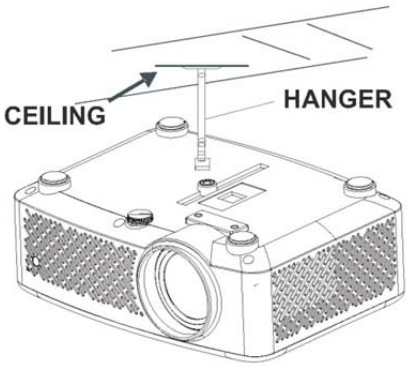

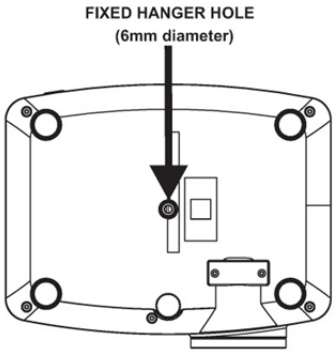

Adjust The Vertical Location

Follow below picture to adjust the vertical location.

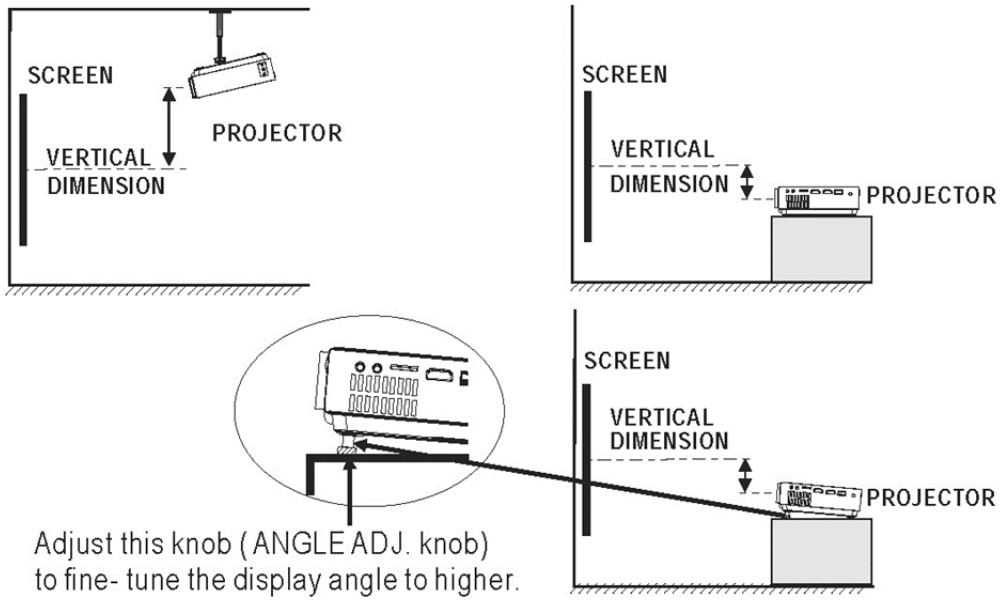

Adjust The Focus And Keystone

Follow below picture to adjust the focus and trapezoidal screen.

Adjust the focus by turning the knob while observing the image pixels near the center of the screen. Optimal focus is obtained when the pixels are clearly visible. Depending on the projected screen size, the focus near the screen edges may be less sharp than the screen center.

Keystone image is created when the projector lens is projected from above or below the center of the screen. Keystone correction restores the distorted image to a rectangular or square shape.

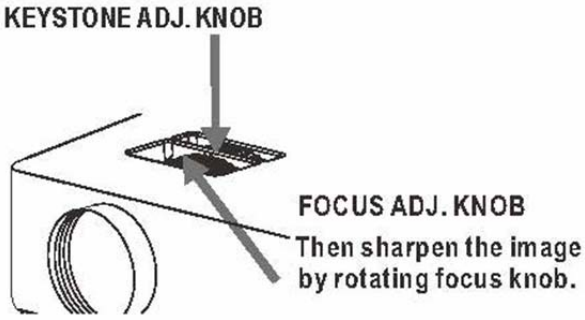

Controls of Remote

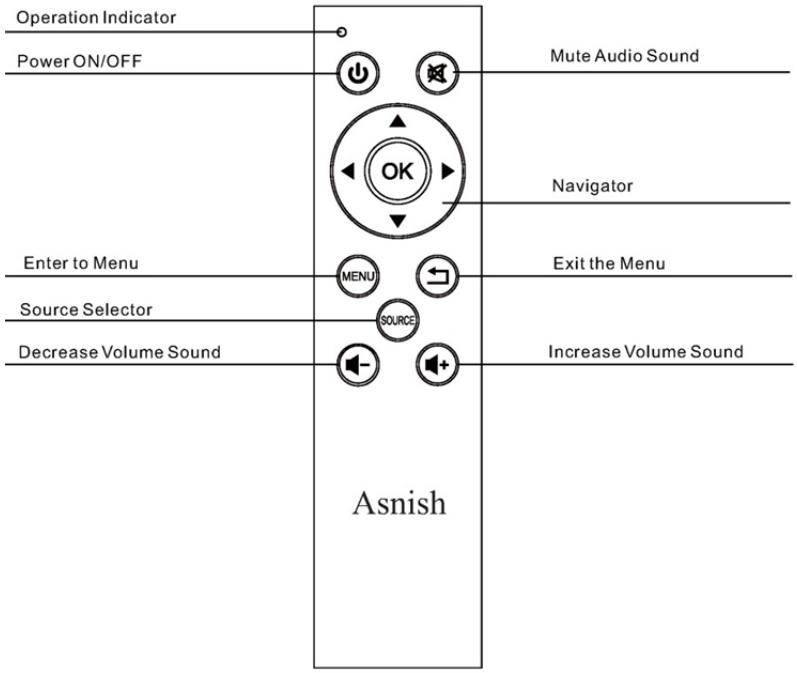

Install / Remove Batteries of Remote

Remove the battery compartment cover on the back of your remote by carefully sliding to open. The battery cover can then be lifted away. Fit the correct batteries (included), referring to the polarity markings. Finally, replace the cover.

NOTES:

- Batteries shall not be exposed to excessive heat such as placing under the sunlight or near a fire.
- Please make sure the batteries are installed with their correct polarities.
- Do not mix old and new batteries.
- Use only the same type of batteries.
- Do not dispose of the batteries in fire, battery may explode or leak.
- Do not recharge a non-rechargeable battery.

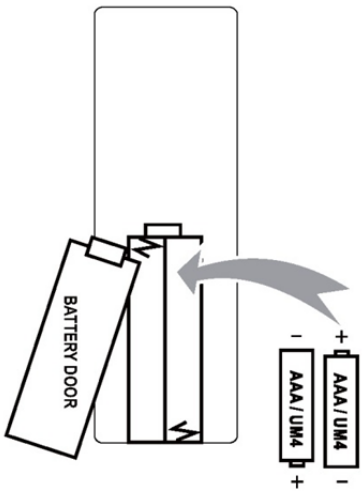

Controls of Projector

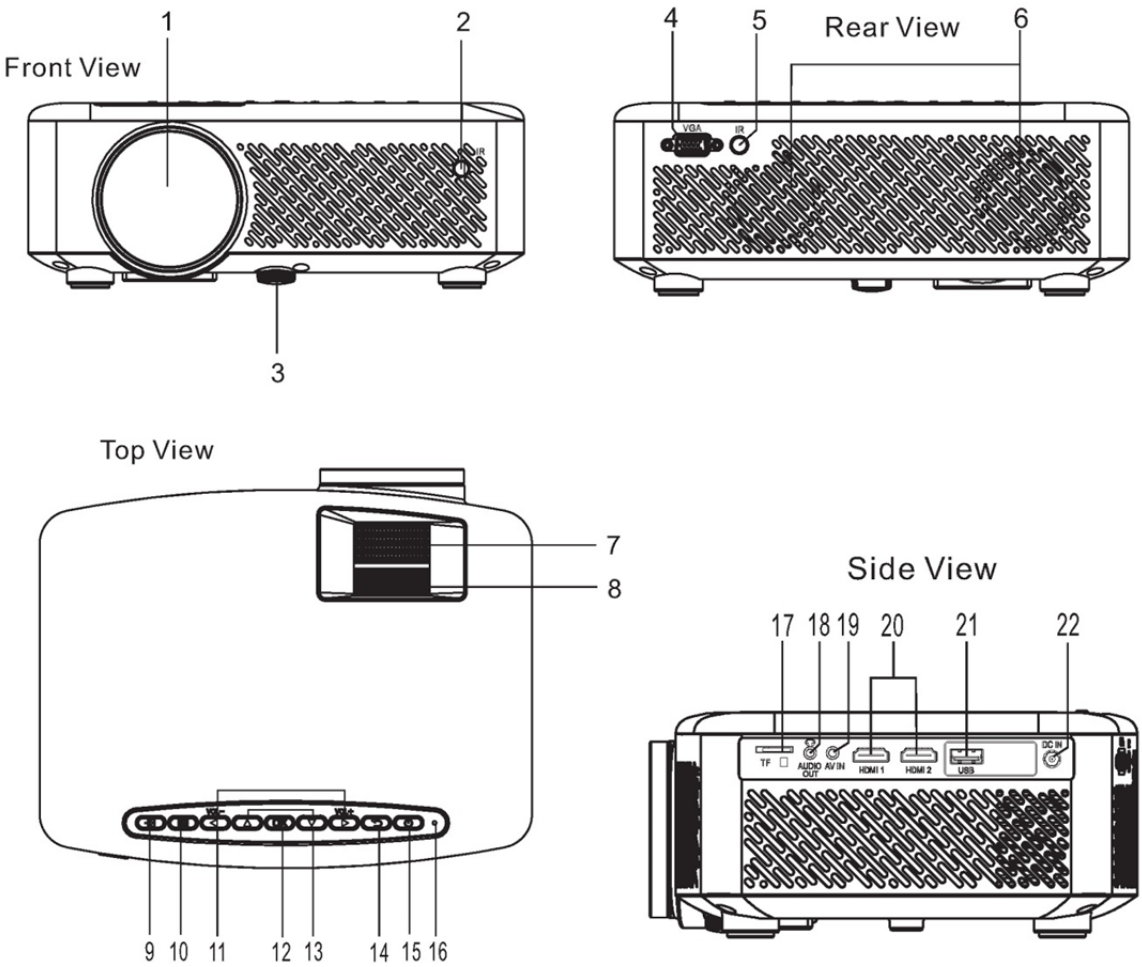

1	LENS	12	OK Button
2	IR Sensor (Front)	13	▲ ▼ Buttons
3	ANGEL ADJ. Knob	14	RETURN ⮌ Button
4	VGA IN Port	15	POWER ⏻ Button
5	IR Sensor (Rear)	16	POWER Indicator
6	SPEAKER	17	TF Card Slot
7	FOCUS ADJ. Knob	18	Audio Out Jack
8	TRAPEZOIDAL ADJ. Knob	19	AV IN Jack
9	SOURCE ⮆ Button	20	HDMI 1 & 2 Ports
10	MENU ☰ Button	21	USB Port
11	◀ Vol- Vol+ ▶ Buttons	22	DC IN Jack

Install Power Adapter

Follow below picture to connect power adapter
Connect small end of adapter **FIRST**. Plug the adapter body to power outlet.

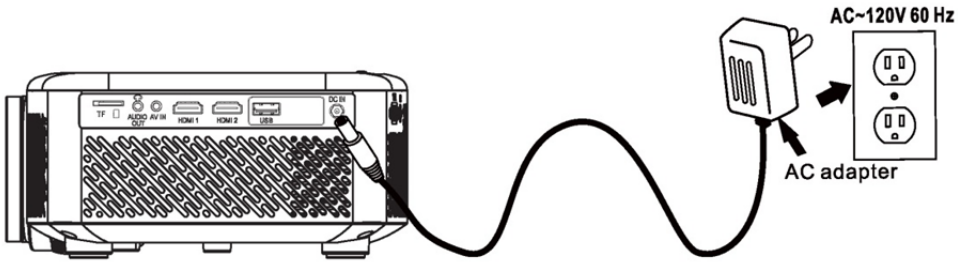

WARNING:

Before connecting to the power supply, ensure that the supply corresponds to the information on the rating label at the back of the apparatus.

Main Button Operation

- Press the button to switch on unit, press again to turn off.

/ **SOURCE** - Press the button to select input source.

/ **MENU** - Press the button to enter projector menu.

- Press the buttons to navigate and select screen item of menu.

- Press the button to return to previous status or exit the menu.

/ **-** Press the buttons to select the sound level on the remote.

◄ Vol- / Vol+ ► **-** Press and hold the buttons to turn the volume up/down on the pannel.

- Press to mute the audio. Press again to resume.

Connect HDMI Show The Image On Projector Screen

Refer to the following picture to connect a set top box, a BD/DVD player or a streaming player to the HDMI input.

1. Press the ⏻ button to standby mode before connect HDMI cable.
2. After connection, press the ⏻ button to turn on unit and power indicator will light GREEN
3. Press the ⇥ / **SOURCE** button to home screen, use ◄▲OK▼► / OK buttons to select HDMI 1 or HDMI 2 icon and press the OK button to enter HDMI mode. The video from the connected device will be shown on projector screen.
4. Press the ⏻ button to turn unit to standby.

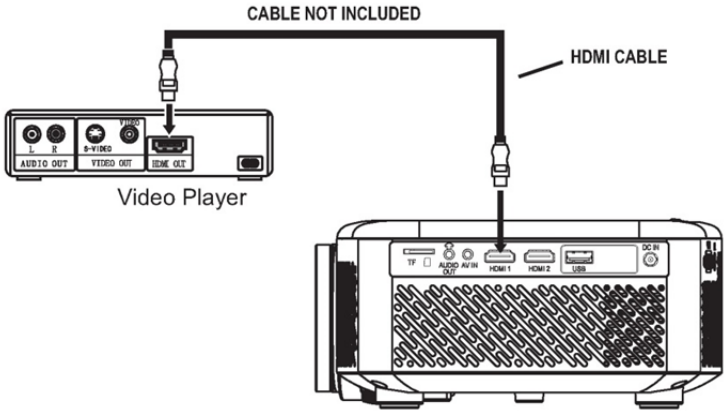

Important Note:
If there is no sound from the internal speakers when playing media contents from a set top box, BD/DVD or streaming players connecting to the HDMI input, please check the set top box or the player's digital audio settings and make sure it is set to "PCM Stereo" mode.

Connect AV Show The Image On Projector Screen

Follow below picture to connect AV cable and device.

1. Press the ⏻ button to standby mode before connect AV cable.
2. Use AV cable to connect follow below figure
3. After connect, press the ⏻ button to turn on unit and power indicator will light GREEN
4. Press the ⇥ / **SOURCE** button to home screen, use ◄▲OK▼► / OK buttons to select AV mode and the video of AV device will show on projector screen.
5. Press the ⏻ button to turn the unit to standby.

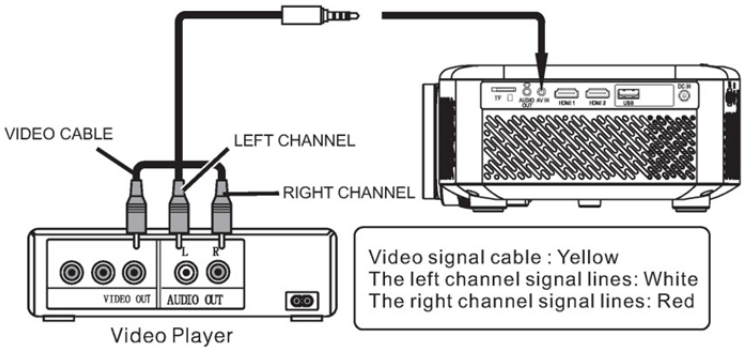

Connect VGA Show The Image On Projector Screen

Follow below picture to connect VGA cable and device.

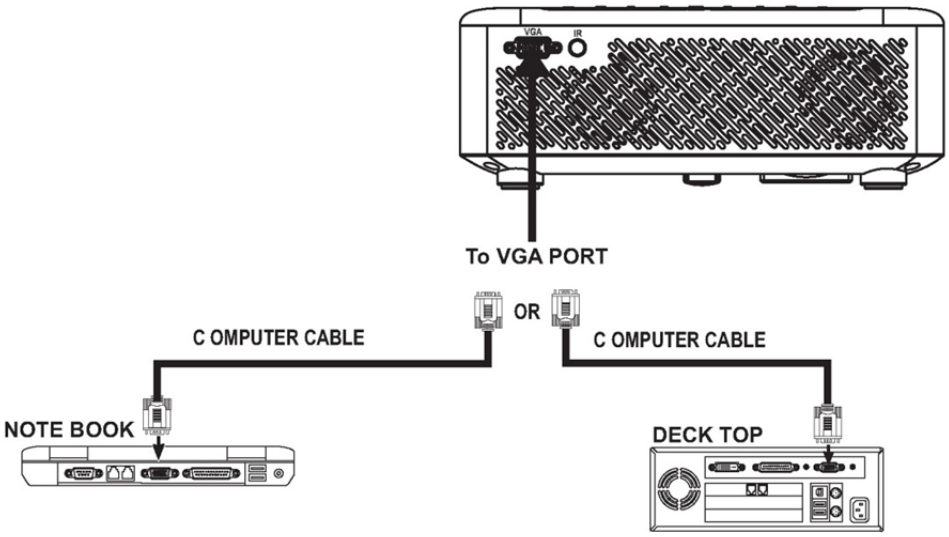

1. Press the ⏻ button to standby mode before connect VGA cable.
2. After connect, press the ⏻ button to turn on unit and power indicator will light GREEN.
3. In home screen, use ◄▲OK▼► / OK buttons to select VGA icon and press the OK button to enter VGA mode. The video of VGA device will show on projector screen
4. Press the ⏻ button to turn the unit to standby.

Please refer to the following table to adjust the output signal from computer

Type	Resolution		Frequency	Field Frequency
PC	VGA	640x480	31.5	60
			34.7	70
			37.9	72
			37.5	75
	SVGA	800x600	31.4	50
			35.1	56
			37.9	60
			46.6	70
			48.1	72
			46.9	75
	XGA	1024x768	40.3	50
			48.4	60
			56.5	70

NOTE: VGA connections do not support audio. You will need to use the laptop or computer's connected speakers

Connect Audio Output (Aux Out / Line Out / Earphones)

Follow below picture to connect audio cable and device.

1. Press the ⏻ button to standby of your projector before connection.
2. Use audio cable to connect follow below figure.
3. After connect and turn on both units. Your projector sound from external device now.
4. After using , turn off both unit

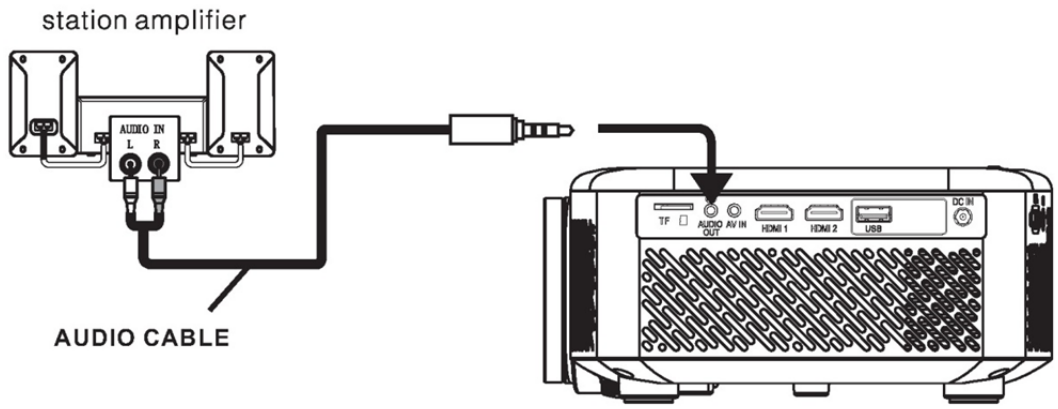

Important Note:

If there is no sound from the stereo audio output when playing media contents from a set top box, BD/DVD or streaming players connecting to the HDMI input, please check the set top box or the player's digital audio settings and make sure it is set to "PCM Stereo" mode.

Install USB Device And TF card (Micro SD Card)

Follow below picture to install USB and TF card

Turn off the unit before install USB / TF card.

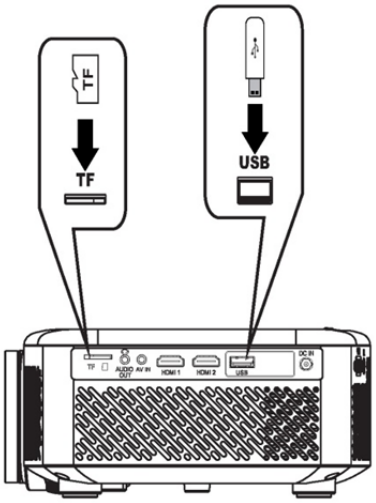

Using TF Card And USB Playback (Media Player)

Install USB / TF device:

1. Press the ⏻ button to standby before install USB / TF card.
2. Install the USB device into USB port / Install the TF device into TF slot.
3. After install, press the ⏻ button to turn on unit and the power indicator light GREEN.
4. In home screen, use buttons to select PHOTO / MUSIC / MOVIE / TEXT icon and press the OK button to enter.
5. Use the ◀ / ▶ button to select C and press OK button to enter.
6. Use buttons to search the correct file to preview and press the OK button to playback file.

NOTE: Remove USB / TF device, press the ⏻ button to turn off power **FIRST**.

Sub-Menu on Movie screen	
1. When movie playback, press the OK button and more function screen show on lower (figure 1). 2. Use the ◀ / ▶ button to select icon and press the OK button to play special function.	Figure 1.
Sub-Menu on Photo screen	
1. When photo playback, press the OK button and more function screen show on lower (figure 2). 2. Use the ◀ / ▶ button to select icon and press the OK button to play special function.	Figure 2.
Sub-Menu on Music screen	
1. When music playback, press the OK button and more function screen show on lower (figure 3). 2. Use the ◀ / ▶ button to select icon and press the OK button to play special function.	Figure 3.
Sub-Menu on Text screen	
1. When text playback, press the OK button and more function screen show on lower (figure 4). 2. Use the ◀ / ▶ button to select icon and press the OK button to play special function.	Figure 4. 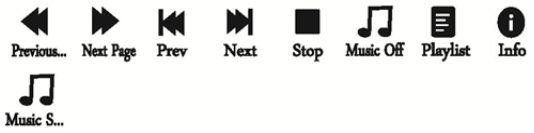

Using Bluetooth Playback

Pairing is the term used when two Bluetooth devices are connected wirelessly for the first time. This allows the devices to see each other and sets up a one to one communication channel between both devices.

Bluetooth Connection

1. Press the ⏻ button to turn on unit and power indicator will light GREEN.
2. Press the ☰/MENU button to enter the projector menu.
3. Press ◀/▶ buttons to select **SOUND** menu as Figure.
4. Use the ▲/▼ button to select **BT Setting** column.
5. Press the ◀/▶ buttons to select "BT Setting On"
6. Turn on your External Bluetooth Speaker and select to Bluetooth pairing mode
7. A few seconds, next the BT logo will show the connected External Bluetooth Speaker name in the main function page.
8. After connection completed, the unit sound to External Bluetooth speaker.

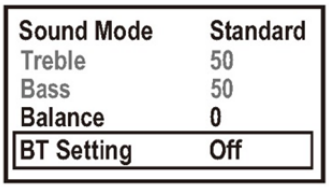

Disconnect the Bluetooth

1. Press the ☰/MENU button to enter the projector menu
2. Press ◀/▶ buttons to select **SOUND** menu as Figure.
3. Use the ▲/▼ button to select **BT Setting** column.
4. Press the ◀/▶ buttons to select "BT Setting Off". The Bluetooth will disconnect.

Multi-screen interactive connection for phone and projector

Wireless Projection

First, ensure the projector and the mobile is connected to the same wireless network. Following below steps.

- **Connect local WiFi router**

1. Press the ⏻ button to turn on unit and power indicator will light GREEN.
2. Press the ⇥ / **SOURCE** button to select **Miracast** icon and press OK button to enter **Miracast / Airplay** page on the screen.
3. Click the WiFi menu to search and select **"Display_XXXX"** (XXXX is numbers and letters which show on the Miracast / Airplay page on the screen) and enter password "12345678" to connect on your mobile device.
4. After connect, scan QR code or click the browser, input IP "192.168.XX.XXX" (XX.XXX is numbers which show on the Miracast / Airplay page on the screen) on the mobile. The **Screen Mirroring Device Management** menu will show on your mobile to configure screen mirroring parameters, choose local WiFi router and enter password to connect.
5. After connected, local WiFi router name and icon will show on the Miracast / Airplay page on the screen.
6. If you want to connect another local WiFi router, repeat step 4 to choose another one.

Note: When the router is successfully connected, the projector will automatically

- **Android Mirroring Function (Miracast mode) (no need to connect the WiFi router)**

1. Press the ⇥ / **SOURCE** button to select **Miracast** icon and press OK button to enter **Miracast / Airplay** page.
2. Turn on WiFi function on your mobile device (no need to connect any WiFi router)
3. Click Miracast function (different mobile models with different names for example: Multi-screen, Wireless Display, Screen Mirroring, Smart View etc…) and select "**Display_XXXX-Mira"**(XXXX is numbers and letters which show on the Miracast / Airplay page on the screen) on the mobile settings
4. After connected, the mobile device contents will mirror on the projector screen

- **Android Mirroring Function (DLNA mode) (unit need to connect the WiFi router)**

1. Press the ⇥ / **SOURCE** button to select **Miracast** icon and press OK button to enter **Miracast / Airplay** page.
2. Connect the same WiFi network as previous **"Connect local WiFi router"** section for projector and mobile.
3. Open the App and select the video / movie to play on your mobile
4. Click "Projection Screen" and select **"Display**_XXXX" (XXXX is numbers and letters which show on Miracast / Airplay page) on the mobile settings.
5. After connected, the mobile device contents will project on the projector screen.

- **iOS mobile Screen Mirroring Function (no need to connect the WiFi router)**

1. Press the / **SOURCE** button to select **Miracast** icon and press OK button to enter **Miracast / Airplay** page
2. Click the Wi-Fi menu to search, select "**Display_XXXX"** (XXXX is numbers and letters which show on the Miracast / Airplay page on the screen) on the mobile device and enter Pin "12345678" to connect
3. Click **Screen Mirroring** function and select "**Display_XXXX"** (XXXX is numbers and letters which show on the Miracast / Airplay page on the screen) on the mobile device to connect
4. After connected, the mobile device contents will mirror on the projector screen

- **iOS mobile Airplay Function (unit need to connect the WiFi router)**

1. Press the / **SOURCE** button to select **Miracast** icon and press OK button to enter **Miracast / Airplay** page.
2. Connect the same WiFi network as previous **"Connect local WiFi router"** section for projector and mobile.
3. There are two modes for using (a) Screen Mirroring mode or (b) Airplay mode

(a) Screen Mirroring mode:

1. Click **Screen Mirroring** function and select Display_XXXX (XXXX is numbers and letters which show on the Miracast / Airplay page on the screen) on the mobile device to connect
2. After connected, the mobile device contents will mirror on the projector screens

(b) Airplay mode:

1. Open the App and select the video / movie to play on your mobile
2. Click "Projection Screen" and select "**Display_XXXX**" (XXXX is numbers and letters which show on the Miracast / Airplay page on the screen) on the mobile settings.
3. After connected, the mobile device contents will project on the projector screen.

Wired Projection

- **iOS mobile**

Follow below picture to connect projector to mobile with the data cable.

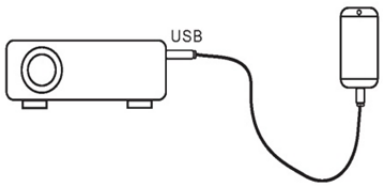

1. Press the button to standby mode before connect data cable (not included).
2. After connect, press the button to turn on unit and power indicator will light GREEN
3. In home screen, use / buttons to select MIRACAST icon and press the OK button to enter Miracast / Airplay page.
4. Select "trust" on the popup window of your mobile. The video of mobile device will show on projector screen
5. Press the button to turn the unit to standby.

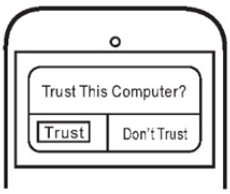

Note: Wired Projection function supports iOS mobile device only.

Using Projector Menu 0

Press ☰/MENU button to enter projector menu.

Auto Adjust	
Horizontal Pos.	0
Vertical Pos.	0
Clock	0
Phase	9

This **Screen** menu showed on right upper of view screen.

(Active in VGA mode)

USE ▲/▼ TO SELECT

Horizontal Pos. 0 PRESS OK

Use ◀ / ▶ buttons to adjust Horizontal Pos. level -16 to 16.

USE ▲/▼ TO SELECT

Vertical Pos. 0 PRESS OK

Use ◀ / ▶ buttons to adjust Vertical Pos. level -16 to 16.

USE ▲/▼ TO SELECT

Clock PRESS OK

Use ◀ / ▶ buttons to adjust Clock digit -30 to 30.

USE ▲/▼ TO SELECT

Phase PRESS OK

Use ◀ / ▶ buttons to adjust Phase digit 0 to 31.

Using Projector Menu 1

Press ☰/MENU button to enter projector menu.

Picture Mode	Standard
Contrast	50
Brightness	50
Color	50
Sharpness	50
Color Temperature	Medium
Noise Reduction	Middle

This **Picture** menu showed on right upper of view screen.

USE ▲/▼ TO SELECT

Picture Mode Standard PRESS OK

Use ▲ / ▼ to select different picture effect to Standard / Dynamic / Mild / User. Use ▲ / ▼ to select and ◀ / ▶ **to** adjust Contrast / Brightness / Color / Sharpness digit If chose User item.

USE ▲/▼ TO SELECT

Contrast 50 PRESS OK

Use ◀ / ▶ buttons to adjust Contrast level 0 to 100. (Active in User item of Picture Mode).

USE ▲/▼ TO SELECT

Brightness 50 PRESS OK

Use ◀ / ▶ buttons to adjust Brightness level 0 to 100. (Active in User item of Picture Mode).

USE ▲/▼ TO SELECT

Color 50 PRESS OK

Use ◀ / ▶ buttons to adjust Color level 0 to 100. (Active in User item of Picture Mode).

USE ▲/▼ TO SELECT

Sharpness 50 PRESS OK

Use ◀ / ▶ buttons to adjust Sharpness level 0 to 100. (Active in User item of Picture Mode).

USE ▲/▼ TO SELECT

Color Temperature Medium PRESS OK

Use ▲ / ▼ buttons to select different color temperature to Cool / Medium / Warm.

USE ▲/▼ TO SELECT

Noise Reduction Middle PRESS OK

Use ▲ / ▼ buttons to select Off / Low / Middle / High

Using Projector Menu 2

Press ☰/**MENU** button to enter projector menu, press ◀／▶ buttons to select **SOUND** menu.

Sound Mode	Standard
Treble	50
Bass	50
Balance	0
BT Setting	Off

This **sound** menu showed on right upper of view screen.

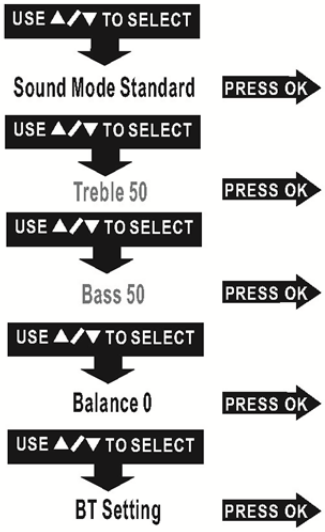

Use ▲／▼ to select different sound effect Standard / Movie / Music / Sports / User. Use ▲／▼ to select and ◀／▶ to adjust Treble and Bass digit if chose User item.

Use ◀／▶ buttons to select Treble level 0 to 100. (Active in User item of Sound Mode).

Use ◀／▶ buttons to select Bass level 0 to 100. (Active in User item of Sound Mode).

Use ◀／▶ buttons to select Balance level to -50 to +50.

Use ◀／▶ buttons to select On /Off

Using Projector Menu 3

Press ☰/**MENU** button to enter projector menu, press ◀／▶ buttons to select **OPTION** menu.

OSD Language	English
Flip	Front Table
Aspect Ratio	16:9
Restore Factory Default	
Software Update (USB)	

This **OPTION** menu showed on right upper of viewing screen.

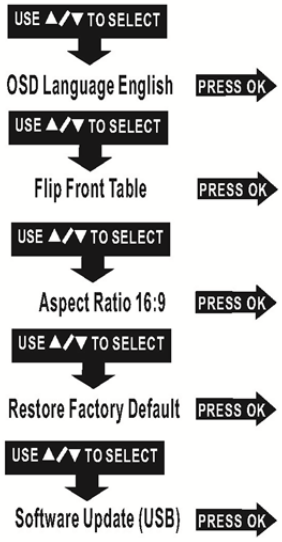

Use ◀／▶ button to select different language.

Use ◀／▶ button to select Front Table / Front Ceiling / Rear Table / Rear Ceiling

Use ▲／▼ to select different Aspect Ratio 4:3 / 16:9 / Full / Zoom1 / Zoom2 / Panorama / Just Scan. (Active by Movie)

Use ◀／▶ buttons to select Y or N. If choose “Y” that your unit will go to factory default setting.

For service center use only

Specifications

Bluetooth Version	5.1 (Transmitter)
Light Source Type	LED
Display Native Resolution	1280 x 720 RGB
HDMI Input Supported Video Resolution.	1080p , 1080i , 720p, 576i , 480p, and 480i
Power Consumption	80W
Included Adapter Connect DC input of unit	Input AC100-240V,50/60Hz Output DC26V, 2.7A.
Projection Size	36-150 inch
Input Port	AV/ VGA / HDMI
USB Port	Support USB device up to 32GB Support format Mpeg1, Mpeg2, Mpeg4, mp3, Jpeg
TF Card	Support TF card up to 32GB Support format Mpeg1, Mpeg2, Mpeg4, mp3, Jpeg
Net Weight (unit)	1.5 KG
Product Dimensions	260 x 211 x 98 mm

Specifications are typical, individual units might vary. They are subject to continuous improvement without notice and without incurring any obligation.