FCC Test Report

Report No: FCS202105011W01

Issued for

Applicant:	Shenzhen Jia Yi Bing Ding TechnologyCo.,Ltd.
Address:	10th floor, Zone A, building F, Guancheng low-carbon Industrial Park, Shangcun, Gongming Street, Guangming New District, shenzhen,China
Product Name:	Bluetooth speaker
Brand Name:	N/A
Model Name:	ZH-2
Series Model:	Vi-1,Vi-2,B-1,B-2,B-3,T-2,A10, M3,W-3,X-1,X-2,SO-2,
FCC ID:	2AZ5Y-ZH2
Issued By: Flux Compliance Service Laboratory Add: Room 105 Floor Bao hao Technology Building 1 NO.15 Gong ye West Road Hi-Tech Industrial, Song shan lake Dongguan Tel: 769-27280901 Fax:769-27280901 http://www.fcs-lab.com	

TEST RESULT CERTIFICATION

Applicant's Name..... :	Shenzhen Jia Yi Bing Ding TechnologyCo.,Ltd.
Address..... :	10th floor, Zone A, building F, Guancheng low-carbon Industrial Park, Shangcun, Gongming Street, Guangming New District, shenzhen,China
Manufacture's Name..... :	Shenzhen Jia Yi Bing Ding TechnologyCo.,Ltd.
Address..... :	10th floor, Zone A, building F, Guancheng low-carbon Industrial Park, Shangcun, Gongming Street, Guangming New District, shenzhen,China

Product Description

Product Name..... :	Bluetooth speaker
Brand Name .....:	N/A
Model Name..... :	ZH-2
Series Model.....:	Vi-1,Vi-2,B-1,B-2,B-3,T-2,A10, M3,W-3,X-1,X-2,SO-2,
Test Standards..... :	FCC Rules and Regulations Part 15 Subpart C, Section 249
Test Procedure..... :	ANSI C63.10:2013

This device described above has been tested FCS, the test results show that the equipment under test (EUT) is in compliance with the FCC requirements. And it is applicable only to the tested sample identified in the report.
This report shall not be reproduced except in full, without the written approval of FCS, this document may be altered or revised by FCS, personal only, and shall be noted in the revision of the document..

Date of Test..... :

Date (s) of performance of tests. :	11 May, 2021 ~ 20 May, 2021
Date of Issue.....:	20 May, 2021
Test Result.....:	Pass

Tested by : Scott Shen

(Scott Shen)

Reviewed by : Duke Qian

(Duke Qian)

Approved by :

(Kait Chen)

Table of Contents **Page**

1. SUMMARY OF TEST RESULTS 5
1.1 TEST FACTORY 6
1.2 MEASUREMENT UNCERTAINTY 6
2. GENERAL INFORMATION 7
2.1 GENERAL DESCRIPTION OF THE EUT 7
2.2 DESCRIPTION OF THE TEST MODES 9
2.3 DESCRIPTION OF NECESSARY ACCESSORIES AND SUPPORT UNITS 10
2.4 EQUIPMENTS LIST 11
3 .CONDUCTED EMISSION MEASUREMENT 12
3.1 LIMIT 12
3.2 TEST PROCEDURE 12
3.3 TEST SETUP 13
3.4 TEST RESULTS 14
4. RADIATED EMISSION MEASUREMENT 16
4.1 LIMIT 16
4.2 TEST PROCEDURE 17
4.3 TEST SETUP 18
4.4 TEST RESULTS 19
5. BAND EDGE TEST 27
5.1 LIMIT 27
5.2 TEST PROCEDURE 27
5.3 TEST SETUP 28
5.4 TEST RESULTS 29
6. 20 DB BANDWIDTH TEST 32
6.1 LIMIT 33
6.2 TEST PROCEDURE 33
6.3 TEST SETUP 33
6.4 TEST RESULTS 34
7. ANTENNA REQUIREMENT 38
6.1 STANDARD REQUIREMENT 38
6.2 EUT ANTENNA 38

Revision History

Rev.	Issue Date	Effect Page	Contents
00	20 May, 2021	All	Initial Issue

1. SUMMARY OF TEST RESULTS

FCC Part 15.249,Subpart C			
Standard Section	Test Item	Judgment	Remark
15.207	Conducted Emission	PASS	--
15.205(a), 15.209(a), 15.249(a), 15.249(c)	Radiated Spurious Emission	PASS	--
15.209	Field strength of fundamental	PASS	
15.249(d)	Band Edge Emission	PASS	--
15.215(c)	20dB Bandwidth	PASS	--
15.203	Antenna Requirement	PASS	--

NOTE:

(1)" N/A" denotes test is not applicable in this Test Report

(2) All tests are according to ANSI C63.10-2013

1.1 TEST FACTORY

Company Name:	Flux Compliance Service Laboratory
Address:	Room 105 Floor Bao hao Technology Building 1 NO.15 Gong ye West Road Hi-Tech Industrial, Song shan lake Dongguan
Telephone:	+86-769-27280901
Fax:	+86-769-27280901
FCC Test Firm Registration Number: 514908 Designation number: CN0127 A2LA accreditation number：5545.01	

1.2 MEASUREMENT UNCERTAINTY

The reported uncertainty of measurement **y ±U**, where expended uncertainty **U** is based on a standard uncertainty multiplied by a coverage factor of **k=2**, providing a level of confidence of approximately **95** %.

No.	Item	Uncertainty
1	RF output power, conducted	±0.71dB
2	Unwanted Emissions, conducted	±2.98 dB
3	Conducted Emission (9KHz-150KHz)	±4.13 dB
4	Conducted Emission (150KHz-30MHz)	±4.74 dB
5	All emissions,radiated(<1G) 30MHz-1000MHz	±3.2 dB
6	All emissions,radiated (1GHz -18GHz)	±3.66 dB
7	All emissions,radiated (18GHz -40GHz)	±4.31 dB

2. GENERAL INFORMATION

2.1 GENERAL DESCRIPTION OF THE EUT

Product Name	Bluetooth speaker
Trade Name	N/A
Model Name	ZH-2
Series Model	Vi-1,Vi-2,B-1,B-2,B-3,T-2,A10,M3,W-3,X-1,X-2,SO-2,
Model Difference	The above product with same circuit, PCB layout, electrical parts, materials and wiring structures, Appearance shape, the materials of decorative accessories is same, only different color.
Channel List	Please refer to the Note 2.
BT	Frequency:2402-2480MHz Modulation: GFSK, π/4-DQPSK Data rate: 1Mbps, 2Mbps Channel number: 79CH
Power Supply	DC 3.7V
Hardware version number	V1.0
Software version number	V1.0
Connecting I/O Port(s)	Please refer to the User's Manual

Note:

1. For a more detailed features description, please refer to the manufacturer's specifications or the User's Manual.

2. **Channel List**

Channel	Frequency	Channel	Frequency	Channel	Frequency	Channel	Frequency
1	2402MHz	21	2422MHz	41	2442MHz	61	2462MHz
2	2403MHz	22	2423MHz	42	2443MHz	62	2463MHz
⋮	⋮	⋮	⋮	⋮	⋮	⋮	⋮
19	2420MHz	39	2440MHz	59	2460MHz	79	2480MHz
20	2421MHz	40	2441MHz	60	2461MHz		

3. Table for Filed Antenna

Ant.	Brand	Model Name	Antenna Type	Connector	Gain (dBi)	NOTE
1	NA	speaker	PCB Antenna	N/A	1.0	Antenna

2.2 DESCRIPTION OF THE TEST MODES

To investigate the maximum EMI emission characteristics generates from EUT, the test system was pre-scanning tested base on the consideration of following EUT operation mode or test configuration mode which possible have effect on EMI emission level. Each of these EUT operation mode(s) or test configuration mode(s) mentioned above was evaluated respectively.

Test software: FCC tool
The test softeware was used to control EUT work in continuous TX mode, and select test channel, Wireless mode as below table

No.	Test model descrption
1	Low channel GFSK
2	Middle channel GFSK
3	High channel GFSK
4	Low channel π/4-DQPSK
5	Middle channel π/4-DQPSK
6	High channel π/4-DQPSK

Note:

1. All the test modes can be supply by battery, only the result of the worst case recorded in the report. GFSK mode is worst mode.
2. For radiated emission, 3 axis were chosen for testing for each applicable mode.
3. The EUT used fully charge battery when tested.
4. During the test, the dutycycle>98%, the test voltage was tuned from 85% to 115% of the Nominal rate supply votage, and found that the worst case was the nominal rated supply condition, So the report just shows that condition's data

Configuration and peripherals

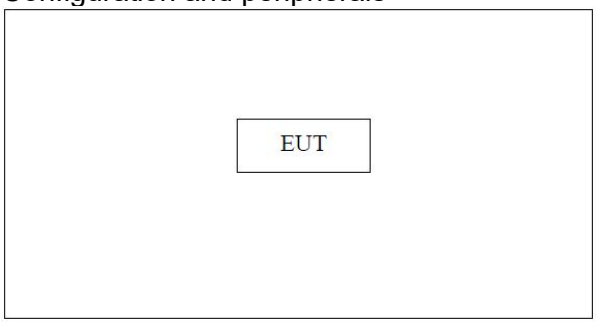

2.3 DESCRIPTION OF NECESSARY ACCESSORIES AND SUPPORT UNITS

The EUT has been tested as an independent unit together with other necessary accessories or support units. The following support units or accessories were used to form a representative test configuration during the tests.

Necessary accessories

Item	Equipment	Mfr/Brand	Model/Type No.	Serial No.	Note

Support units

Item	Equipment	Mfr/Brand	Model/Type No.	Serial No.	Note

Note:

(1) The support equipment was authorized by Declaration of Confirmation.

(2) For detachable type I/O cable should be specified the length in cm in 『Length』 column.

(3) “YES” is means “shielded” “with core”; “NO” is means “unshielded” “without core”.

2.4 EQUIPMENTS LIST

Radiation Test equipment

Kind of Equipment	Manufacturer	Type No.	Company No.	Last calibration	Calibrated until
EMI Test Receiver	R&S	ESRP 3	FCS-E001	2020. 06.26	2021. 06.25
Signal Analyzer	R&S	FSV40-N	FCS-E012	2020.06.05	2021.06.04
Active loop Antenna	ZHINAN	ZN30900C	FCS-E013	2020.08.09	2021.08.10
Bilog Antenna	SCHWARZBECK	VULB 9168	FCS-E002	2020.08.26	2021.08.25
Horn Antenna	SCHWARZBECK	BBHA 9120D	FCS-E003	2020.08.26	2021.08.25
SHF-EHF Horn Antenna (18G-40GHz)	A-INFO	LB-180400-KF	FCS-E018	2020.06.26	2021.06.25
Pre-Amplifier(0.1M-3G Hz)	EMCI	EM330N	FCS-E004	2020.06.26	2021.06.25
Pre-Amplifier (1G-18GHz)	N/A	TSAMP-0518SE	FCS-E014	2020.06.03	2021.06.02
Pre-Amplifier (18G-40GHz)	TERA-MW	TRLA-0400	FCS-E019	2020.08.08	2021.08.07
Temperature & Humidity	HTC-1	victor	FCS-E005	2020.08.26	2021.08.25

Conduction Test equipment

Kind of Equipment	Manufacturer	Type No.	Company No.	Last calibration	Calibrated until
EMI Test Receiver	R&S	ESPI	FCS-E020	2020.06.03	2021.06.02
LISN	R&S	ENV216	FCS-E007	2020.08.08	2021.08.07
LISN	ETS	3810/2NM	FCS-E009	2020.06.03	2021.06.02
Temperature & Humidity	HTC-1	victor	FCS-E008	2020.08.08	2021.08.07

RF Connected Test

Kind of Equipment	Manufacturer	Type No.	Company No.	Last calibration	Calibrated until
Spectrum Analyzer	Keysight	N9020A	FCS-E015	2020.06.03	2021.06.02
Spectrum Analyzer	Agilent	E4447A	MY50180039	2020.08.08	2021.08.07
Spectrum Analyzer	R&S	FSV-40	101499	2020.08.26	2021.08.25

3 .CONDUCTED EMISSION MEASUREMENT

3.1 LIMIT

Operating frequency band. In case the emission fall within the restricted band specified on Part 207(a) limit in the table below has to be followed.

FREQUENCY (MHz)	Conducted Emissionlimit (dBuV)	
	Quasi-peak	Average
0.15 -0.5	66 - 56 *	56 - 46 *
0.50 -5.0	56.00	46.00
5.0 -30.0	60.00	50.00

Note:
(1) The tighter limit applies at the band edges.
(2) The limit of " * " marked band means the limitation decreases linearly with the logarithm of the frequency in the range.

3.2 TEST PROCEDURE

The following table is the setting of the receiver

Receiver Parameters	Setting
Attenuation	10 dB
Start Frequency	0.15 MHz
Stop Frequency	30 MHz
IF Bandwidth	9 kHz

a. The EUT was 0.8 meters from the horizontal ground plane and 0.4 meters from the vertical ground plane with EUT being connected to the power mains through a line impedance stabilization network (LISN). All other support equipments powered from additional LISN(s). The LISN provide 50 Ohm/ 50uH of coupling impedance for the measuring instrument.
b. Interconnecting cables that hang closer than 40 cm to the ground plane shall be folded back and forth in the center forming a bundle 30 to 40 cm long.
c. I/O cables that are not connected to a peripheral shall be bundled in the center. The end of the cable may be terminated, if required, using the correct terminating impedance. The overall length shall not exceed 1 m.
d. LISN at least 80 cm from nearest part of EUT chassis.
e. For the actual test configuration, please refer to the related Item –EUT Test Photos.

3.3 TEST SETUP

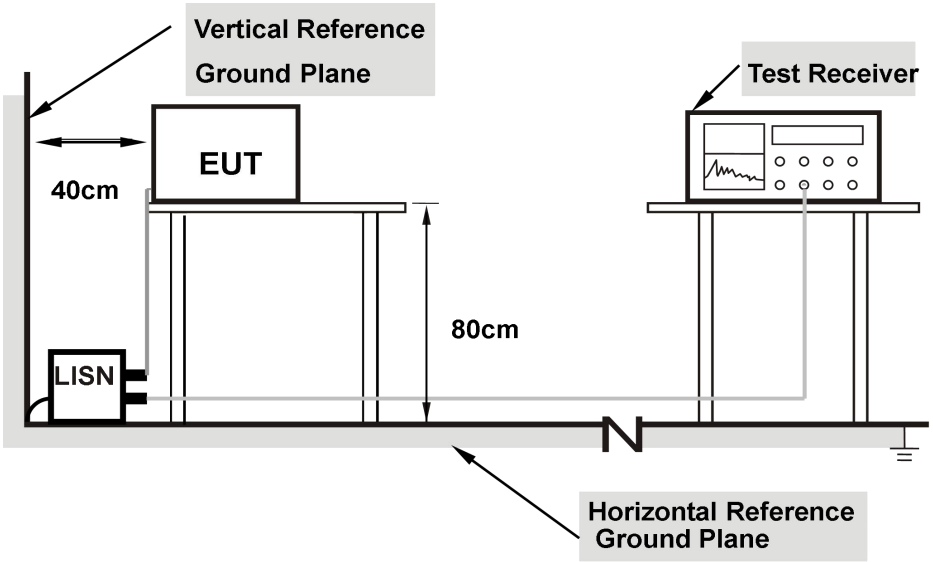

Note: 1.Support units were connected to second LISN.

2.Both of LISNs (AMN) are 80 cm from EUT and at least 80 from other units and other metal planes

3.4 TEST RESULTS

Temperature:	25℃	Relative Humidity:	50%
Test Mode:	GFSK	Test Voltage:	DC 3.7V
Phase:	L	Result:	Pass

No.	Frequency (MHz)	Reading (dBuV)	Correct Factor(dB/m)	Result (dBuV/m)	Limit (dBuV/m)	Margin (dB)	Remark
1	0.1680	36.68	9.78	46.46	65.06	18.60	QP
2	0.1680	20.89	9.78	30.67	55.06	24.39	AVG
3	0.1949	34.68	9.80	44.48	63.83	19.35	QP
4	0.1949	19.25	9.80	29.05	53.83	24.78	AVG
5	0.4605	38.18	9.86	48.04	56.68	8.64	QP
6	0.4605	25.58	9.86	35.44	46.68	11.24	AVG
7	1.2750	26.97	11.30	38.27	56.00	17.73	QP
8	1.2750	9.15	11.30	20.45	46.00	25.55	AVG
9	3.3450	24.89	17.19	42.08	56.00	13.92	QP
10	3.3450	9.14	17.19	26.33	46.00	19.67	AVG
11	7.1205	23.12	19.98	43.10	60.00	16.90	QP
12	7.1205	5.73	19.98	25.71	50.00	24.29	AVG

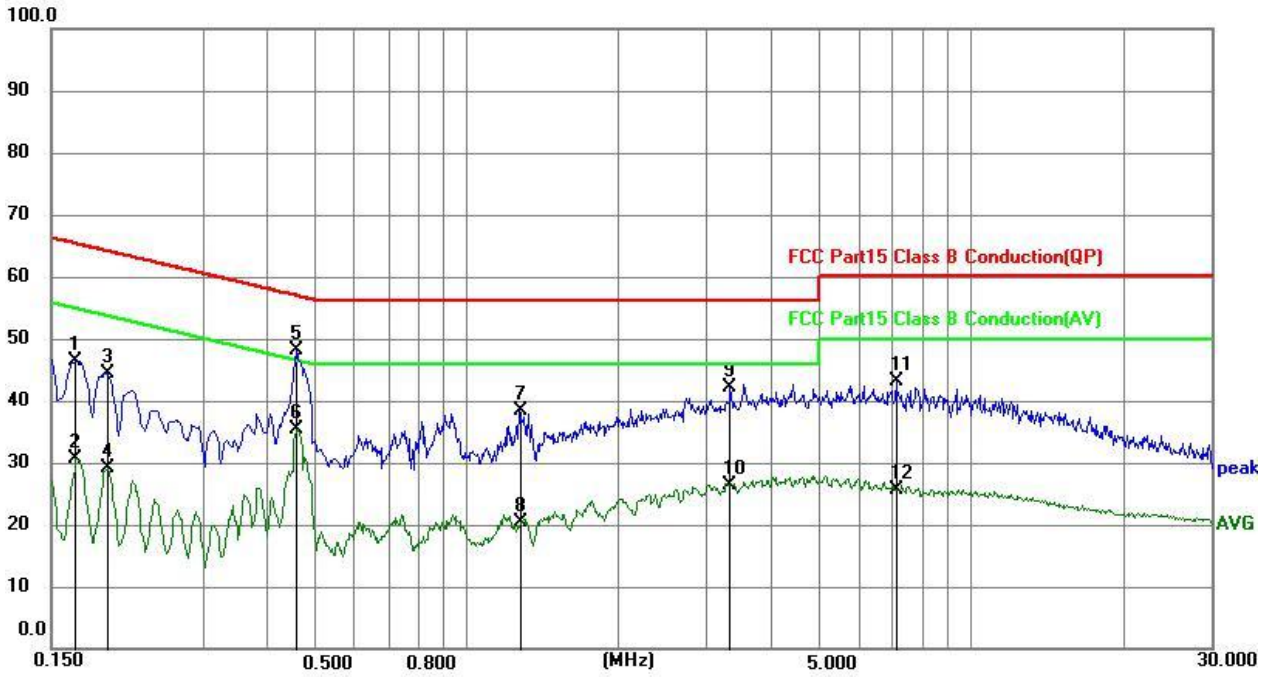

Temperature:	25℃	Relative Humidity:	50%
Test Mode:	GFSK	Test Voltage:	DC 3.7V
Phase:	N	Result:	Pass

No.	Frequency (MHz)	Reading (dBuV)	Correct Factor(dB/m)	Result (dBuV/m)	Limit (dBuV/m)	Margin (dB)	Remark
1	0.4650	42.00	9.86	51.86	56.60	4.74	QP
2	0.4650	30.98	9.86	40.84	46.60	5.76	AVG
3	0.8160	33.01	9.90	42.91	56.00	13.09	QP
4	0.8160	19.52	9.90	29.42	46.00	16.58	AVG
5	1.3560	28.72	11.70	40.42	56.00	15.58	QP
6	1.3560	16.62	11.70	28.32	46.00	17.68	AVG
7	2.6115	29.55	15.97	45.52	56.00	10.48	QP
8	2.6115	15.95	15.97	31.92	46.00	14.08	AVG
9	4.3620	28.02	18.94	46.96	56.00	9.04	QP
10	4.3620	14.43	18.94	33.37	46.00	12.63	AVG
11	19.2345	17.64	20.25	37.89	60.00	22.11	QP
12	19.2345	3.49	20.25	23.74	50.00	26.26	AVG

Remark:

1. All readings are Quasi-Peak and Average values.

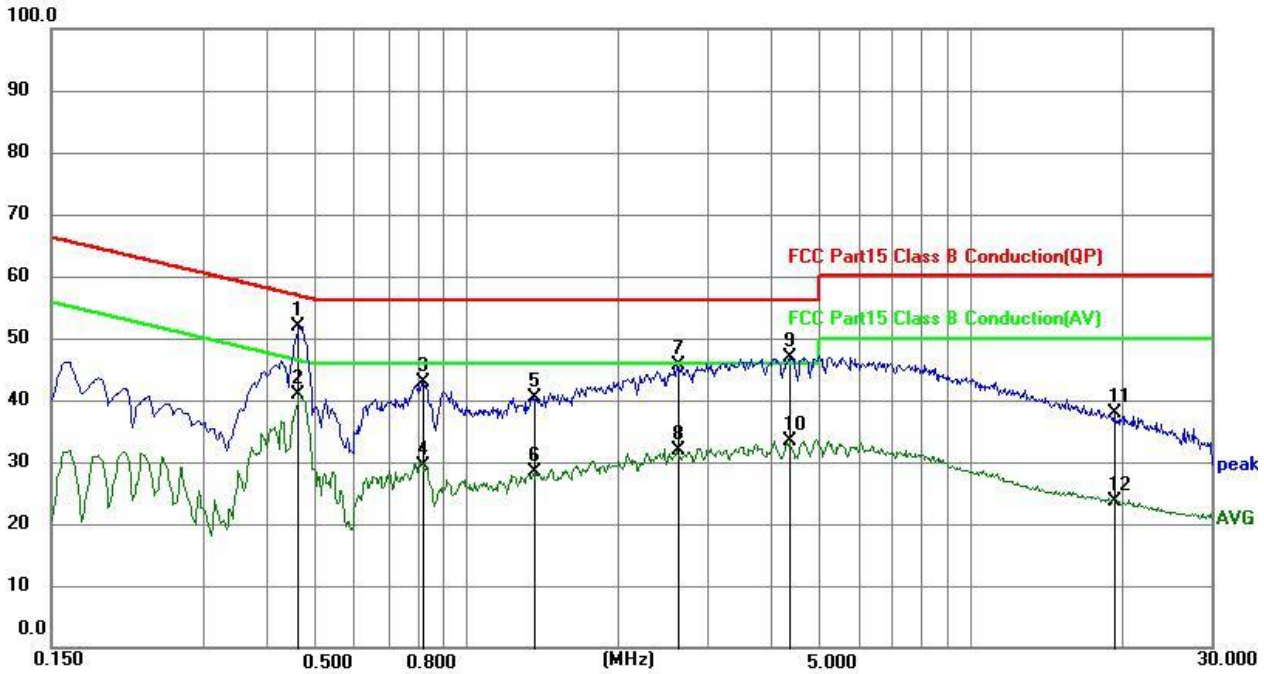

4. RADIATED EMISSION MEASUREMENT

4.1 LIMIT

In any 100 kHz bandwidth outside the operating frequency band. In case the emission fall within the Restricted band specified on Part15.205(a)&209(a) limit in the table and according to ANSI C63.10-2013 below has to be followed

LIMITS OF RADIATED EMISSION MEASUREMENT (0.009mhz - 1000mhz)

Frequencies (MHz)	Field Strength (micorvolts/meter)	Measurement Distance (meters)
0.009~0.490	2400/F(KHz)	300
0.490~1.705	24000/F(KHz)	30
1.705~30.0	30	30
30~88	100	3
88~216	150	3
216~960	200	3
Above 960	500	3

LIMITS OF RADIATED EMISSION MEASUREMENT (1GHz-25 GHz)

FREQUENCY (MHz)	(dBuV/m) (at 3M)	
	PEAK	AVERAGE
Above 1000	74	54

LIMITS OF FIELD STRENGTH OF THE FUNDAMENTAL SIGNAL

FREQUENCY (MHz)	(dBuV/m) (at 3M)	
	PEAK	AVERAGE
2400-2483.5	114	94

Notes:
(1) The limit for radiated test was performed according to FCC PART 15C.
(2) The tighter limit applies at the band edges.
(3) Emission level (dBuV/m)=20log Emission level (uV/m).

4.2 TEST PROCEDURE

Spectrum Parameter	Setting
Attenuation	Auto
Detector	Peak/AV
Start Frequency	1000 MHz(Peak/AV)
Stop Frequency	10th carrier hamonic(Peak/AV)
RB / VB (emission in restricted band)	PK=1MHz / 1MHz, AV=1 MHz /10 Hz (Peak detector is for Both)

a. The measuring distance of at 3 m shall be used for measurements at frequency 0.009MHz up to 1GHz,and above 1GHz.
b. The EUT was placed on the top of a rotating table 0.8 meters (above 1GHz is 1.5 m) above the ground at a 3 meter anechoic chamber test site. The table was rotated 360 degrees to determine the position of the highest radiation.
c. The height of the equipment shall be 0.8 m(above 1GHz is 1.5 m); the height of the test antenna shall vary between 1 m to 4 m. horizontal and vertical polarizations of the antenna are set to make the measurement.
d. The initial step in collecting conducted emission data is a spectrum analyzer peak detector mode pre-scanning the measurement frequency range. Significant peaks are then marked and then QuasiPeak detector mode re-measured.
e. If the Peak Mode measured value compliance with and lower than Quasi Peak Mode Limit, the EUT shall be deemed to meet QP Limits and then no additional QP Mode measurement performed.
f. For the actual test configuration, please refer to the related Item –EUT Test Photos.

Note:
Both horizontal and vertical antenna polarities were tested and performed pretest to three orthogonal axis. The worst case emissions were reported
For fundamental frequency ,RBW>20dB BW ,VBW>RBW,PK detector for PK value, RMS detector for AV value.

4.3 TEST SETUP

（A）Radiated Emission Test-Up Frequency Below 30MHz

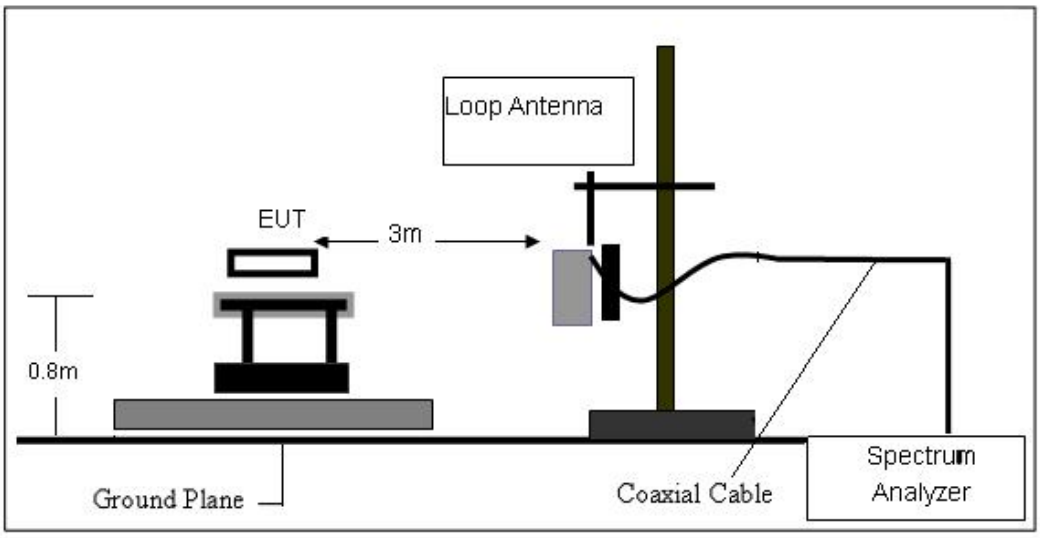

（B）Radiated Emission Test-Up Frequency 30MHz~1GHz

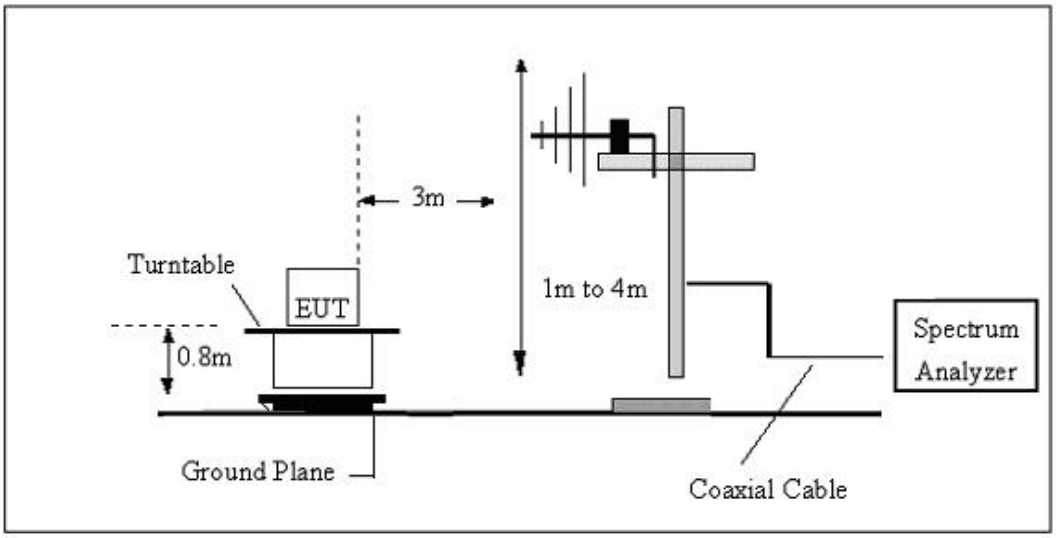

（C）Radiated Emission Test-Up Frequency Above 1GHz

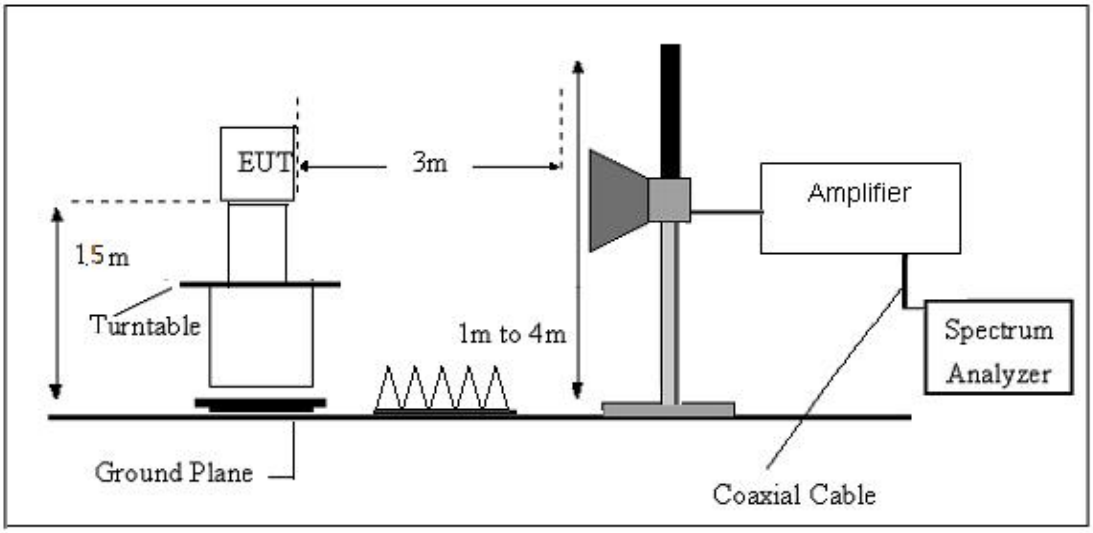

4.4 TEST RESULTS

Temperature:	25.3℃	Relative Humidity:	59%
Test Mode:	GFSK Mode	Test Voltage:	DC 3.7V

For field strength of the fundamental signal

Peak value

Frequency (MHz)	Read Level (dBuV)	Antenna Factor (dB/m)	Cable Loss (dB)	Preamp Factor (dB)	Level (dBuV/m)	Limit Line (dBuV/m)	Over Limit (dB)	polarization
2402.00	93.15	27.58	5.39	30.18	95.94	114.00	-18.06	Vertical
2402.00	92.50	27.58	5.39	30.18	95.29	114.00	-18.71	Horizontal
2441.00	93.70	27.55	5.43	30.06	96.62	114.00	-17.38	Vertical
2441.00	88.89	27.55	5.43	30.06	91.81	114.00	-22.19	Horizontal
2480.00	91.04	27.52	5.47	29.93	94.10	114.00	-19.90	Vertical
2480.00	89.86	27.52	5.47	29.93	92.92	114.00	-21.08	Horizontal

Average value

Frequency (MHz)	Read Level (dBuV)	Antenna Factor (dB/m)	Cable Loss (dB)	Preamp Factor (dB)	Level (dBuV/m)	Limit Line (dBuV/m)	Over Limit (dB)	polarization
2402.00	81.57	27.58	5.39	30.18	84.36	94.00	-9.64	Vertical
2402.00	80.25	27.58	5.39	30.18	83.04	94.00	-10.96	Horizontal
2441.00	79.17	27.55	5.43	30.06	82.09	94.00	-11.91	Vertical
2441.00	77.41	27.55	5.43	30.06	80.33	94.00	-13.67	Horizontal
2480.00	83.60	27.52	5.47	29.93	86.66	94.00	-7.34	Vertical
2480.00	82.14	27.52	5.47	29.93	85.20	94.00	-8.80	Horizontal

Temperature:	25.3℃	Relative Humidity:	59%
Test Mode:	π/4 DQPSK	Test Voltage:	DC 3.7V

Peak value

Frequency (MHz)	Read Level (dBuV)	Antenna Factor (dB/m)	Cable Loss (dB)	Preamp Factor (dB)	Level (dBuV/m)	Limit Line (dBuV/m)	Over Limit (dB)	polarization
2402.00	90.20	27.58	5.39	30.18	92.99	114.00	-21.01	Vertical
2402.00	87.93	27.58	5.39	30.18	90.72	114.00	-23.28	Horizontal
2441.00	88.69	27.55	5.43	30.06	91.61	114.00	-22.39	Vertical
2441.00	86.98	27.55	5.43	30.06	89.90	114.00	-24.11	Horizontal
2480.00	91.22	27.52	5.47	29.93	94.28	114.00	-19.72	Vertical
2480.00	88.30	27.52	5.47	29.93	91.36	114.00	-22.64	Horizontal

Average value

Frequency (MHz)	Read Level (dBuV)	Antenna Factor (dB/m)	Cable Loss (dB)	Preamp Factor (dB)	Level (dBuV/m)	Limit Line (dBuV/m)	Over Limit (dB)	polarization
2402.00	76.36	27.58	5.39	30.18	79.15	94.00	-14.85	Vertical
2402.00	74.63	27.58	5.39	30.18	77.42	94.00	-16.58	Horizontal
2441.00	74.93	27.55	5.43	30.06	77.85	94.00	-16.15	Vertical
2441.00	72.25	27.55	5.43	30.06	75.17	94.00	-18.83	Horizontal
2480.00	76.99	27.52	5.47	29.93	80.05	94.00	-13.95	Vertical
2480.00	74.68	27.52	5.47	29.93	77.74	94.00	-16.26	Horizontal

For spurious emission

(9KHz-30MHz)

Freq.	Reading	Limit	Margin	State	Test Result
(MHz)	(dBuV/m)	(dBuV/m)	(dB)	P/F	
--	--	--	--	--	PASS
--	--	--	--	--	PASS

Note:
The amplitude of spurious emissions which are attenuated by more than 20dB below the permissible value has no need to be reported.
Distance extrapolation factor =40 log (specific distance/test distance)(dB);
Limit line = specific limits (dBuv) + distance extrapolation factor.

(30MHZ-1000MHZ)

Temperature:	25.7℃	Relative Humidity:	60%
Test Voltage:	DC 3.7V	Phase:	Horizontal
Test Mode:	GFSK		

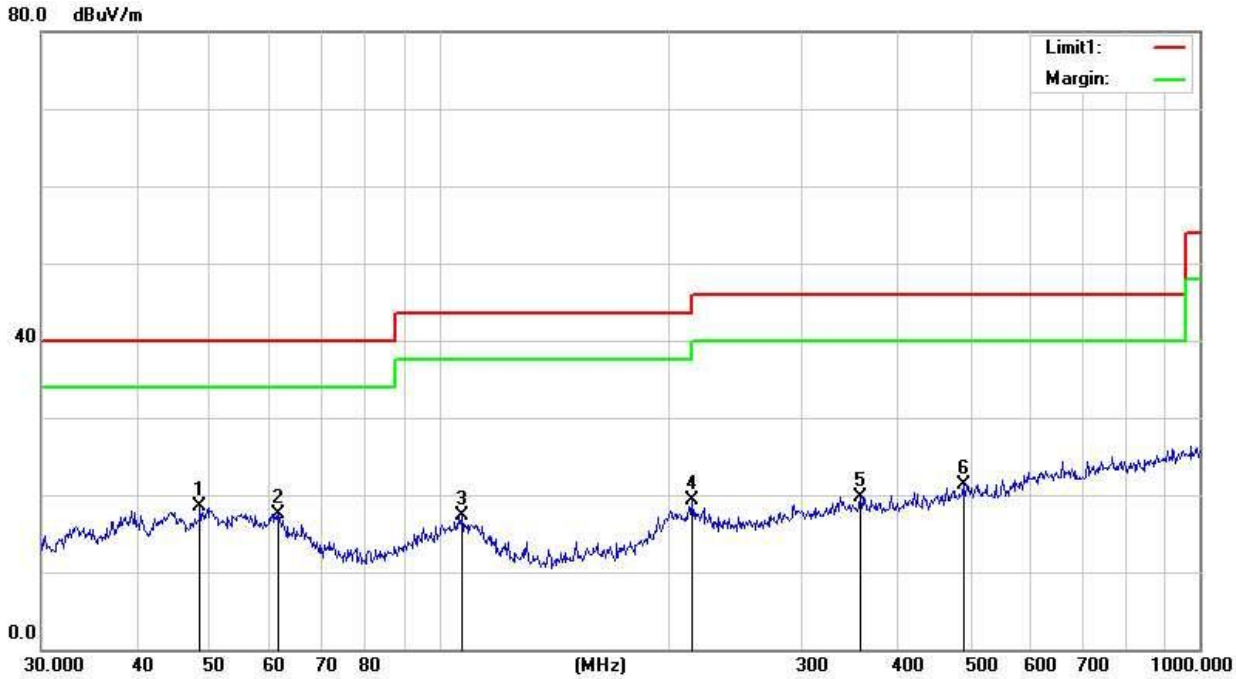

No.	Frequency (MHz)	Reading (dBuV)	Correction (dB/m)	Result (dBuV/m)	Limit (dBuV/m)	Margin (dB)	Remark
1	48.5016	35.01	-16.53	18.48	40.00	-21.52	QP
2	61.5618	34.87	-17.40	17.47	40.00	-22.53	QP
3	107.1337	35.16	-17.83	17.33	43.50	-26.17	QP
4	215.2678	37.18	-17.88	19.30	43.50	-24.20	QP
5	357.9287	34.74	-14.94	19.80	46.00	-26.20	QP
6	489.0270	34.74	-13.38	21.36	46.00	-24.64	QP

Temperature:	22.7℃	Relative Humidity:	61%
Test Voltage:	DC 3.7V	Phase:	Vertical
Test Mode:	GFSK		

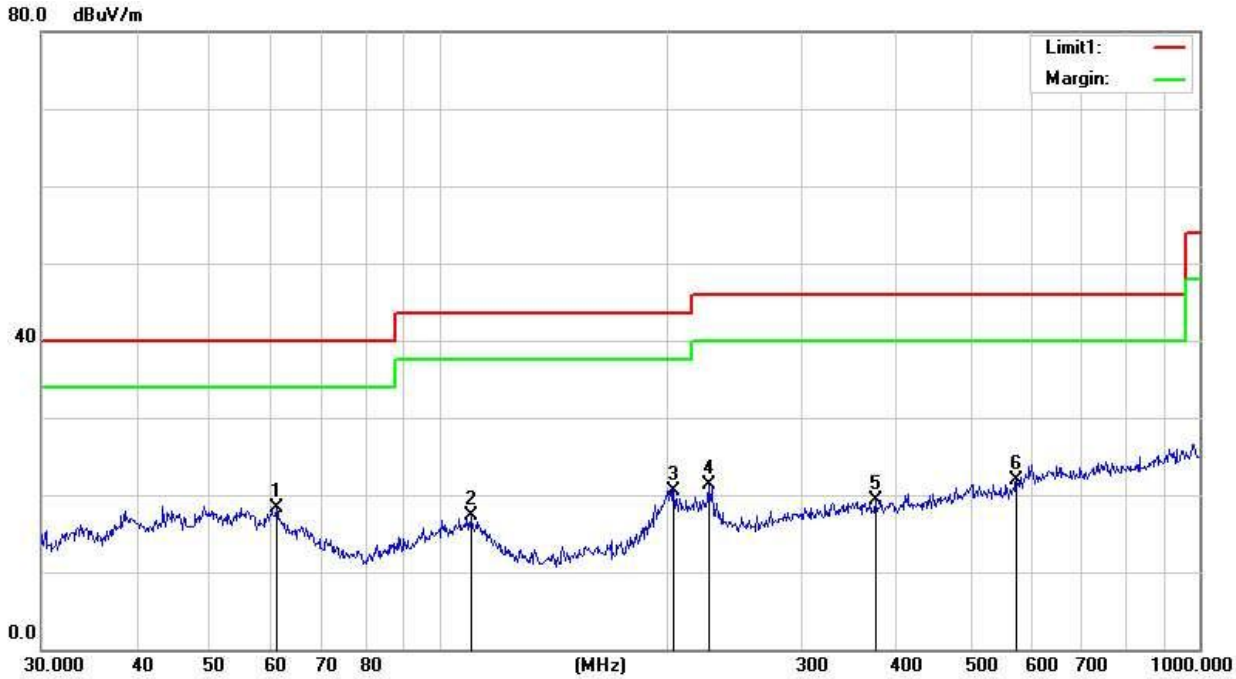

No.	Frequency (MHz)	Reading (dBuV)	Correction (dB/m)	Result (dBuV/m)	Limit (dBuV/m)	Margin (dB)	Remark
1	61.1316	58.63	-40.24	18.39	40.00	-21.61	QP
2	110.1816	57.45	-40.24	17.21	43.50	-26.29	QP
3	203.5228	60.84	-40.24	20.60	43.50	-22.90	QP
4	226.0994	61.59	-40.24	21.35	46.00	-24.65	QP
5	374.6225	59.56	-40.24	19.32	46.00	-26.68	QP
6	574.6258	62.10	-40.24	21.86	46.00	-24.14	QP

Remarks:

1. Margin = Result (Result =Reading + Factor) – Limit

(1GHZ~25GHZ)

LOW CH(GFSK)

Peak value

Frequency (MHz)	Read Level (dBuV)	Antenna Factor (dB/m)	Cable Loss (dB)	Preamp Factor (dB)	Level (dBuV/m)	Limit Line (dBuV/m)	Over Limit (dB)	polarization
4804.00	37.74	31.78	8.60	32.09	46.03	74.00	-27.97	Vertical
7206.00	32.12	36.15	11.65	32.00	47.92	74.00	-26.08	Vertical
9608.00	31.73	37.95	14.14	31.62	52.20	74.00	-21.80	Vertical
12010.00	*					74.00		Vertical
14412.00	*					74.00		Vertical
4804.00	42.12	31.78	8.60	32.09	50.41	74.00	-23.59	Horizontal
7206.00	33.91	36.15	11.65	32.00	49.71	74.00	-24.29	Horizontal
9608.00	31.19	37.95	14.14	31.62	51.66	74.00	-22.34	Horizontal
12010.00	*					74.00		Horizontal
14412.00	*					74.00		Horizontal

AV value

Frequency (MHz)	Read Level (dBuV)	Antenna Factor (dB/m)	Cable Loss (dB)	Preamp Factor (dB)	Level (dBuV/m)	Limit Line (dBuV/m)	Over Limit (dB)	polarization
4880.00	25.86	31.85	8.67	32.12	34.26	54.00	-19.74	Vertical
7320.00	20.34	36.37	11.72	31.89	36.54	54.00	-17.46	Vertical
9760.00	19.44	38.35	14.25	31.62	40.42	54.00	-13.58	Vertical
12200.00	*					54.00		Vertical
14640.00	*					54.00		Vertical
4880.00	30.06	31.85	8.67	32.12	38.46	54.00	-15.54	Horizontal
7320.00	22.50	36.37	11.72	31.89	38.70	54.00	-15.30	Horizontal
9760.00	19.14	38.35	14.25	31.62	40.12	54.00	-13.88	Horizontal
12200.00	*					54.00		Horizontal
14640.00	*					54.00		Horizontal

MIDDLE CH(GFSK)

Peak value

Frequency (MHz)	Read Level (dBuV)	Antenna Factor (dB/m)	Cable Loss (dB)	Preamp Factor (dB)	Level (dBuV/m)	Limit Line (dBuV/m)	Over Limit (dB)	polarization
4882.00	37.65	31.85	8.67	32.12	46.05	74.00	-27.95	Vertical
7323.00	32.38	36.37	11.72	31.89	48.58	74.00	-25.42	Vertical
9764.00	29.73	38.35	14.25	31.62	50.71	74.00	-23.29	Vertical
12205.00	*					74.00		Vertical
14646.00	*					74.00		Vertical
4882.00	38.89	31.85	8.67	32.12	47.29	74.00	-26.71	Horizontal
7323.00	31.46	36.37	11.72	31.89	47.66	74.00	-26.34	Horizontal
9764.00	28.05	38.35	14.25	31.62	49.03	74.00	-24.97	Horizontal
12205.00	*					74.00		Horizontal
14646.00	*					74.00		Horizontal

AV value

Frequency (MHz)	Read Level (dBuV)	Antenna Factor (dB/m)	Cable Loss (dB)	Preamp Factor (dB)	Level (dBuV/m)	Limit Line (dBuV/m)	Over Limit (dB)	polarization
4882.00	26.30	31.85	8.67	32.12	34.70	54.00	-19.30	Vertical
7323.00	22.16	36.37	11.72	31.89	38.36	54.00	-15.64	Vertical
9764.00	20.85	38.35	14.25	31.62	41.83	54.00	-12.17	Vertical
12205.00	*					54.00		Vertical
14646.00	*					54.00		Vertical
4882.00	32.51	31.85	8.67	32.12	40.91	54.00	-13.09	Horizontal
7323.00	24.38	36.37	11.72	31.89	40.58	54.00	-13.42	Horizontal
9764.00	20.80	38.35	14.25	31.62	41.78	54.00	-12.22	Horizontal
12205.00	*					54.00		Horizontal
14646.00	*					54.00		Horizontal

HIGH CH(GFSK)

Peak value

Frequency (MHz)	Read Level (dBuV)	Antenna Factor (dB/m)	Cable Loss (dB)	Preamp Factor (dB)	Level (dBuV/m)	Limit Line (dBuV/m)	Over Limit (dB)	polarization
4960.00	38.16	31.93	8.73	32.16	46.66	74.00	-27.34	Vertical
7440.00	33.70	36.59	11.79	31.78	50.30	74.00	-23.70	Vertical
9920.00	31.04	38.81	14.38	31.88	52.35	74.00	-21.65	Vertical
12400.00	*					74.00		Vertical
14880.00	*					74.00		Vertical
4960.00	39.79	31.93	8.73	32.16	48.29	74.00	-25.71	Horizontal
7440.00	32.46	36.59	11.79	31.78	49.06	74.00	-24.94	Horizontal
9920.00	31.96	38.81	14.38	31.88	53.27	74.00	-20.73	Horizontal
12400.00	*					74.00		Horizontal
14880.00	*					74.00		Horizontal

AV value

Frequency (MHz)	Read Level (dBuV)	Antenna Factor (dB/m)	Cable Loss (dB)	Preamp Factor (dB)	Level (dBuV/m)	Limit Line (dBuV/m)	Over Limit (dB)	polarization
4960.00	25.19	31.93	8.73	32.16	33.69	54.00	-20.31	Vertical
7440.00	19.89	36.59	11.79	31.78	36.49	54.00	-17.51	Vertical
9920.00	19.04	38.81	14.38	31.88	40.35	54.00	-13.65	Vertical
12400.00	*					54.00		Vertical
14880.00	*					54.00		Vertical
4960.00	29.30	31.93	8.73	32.16	37.80	54.00	-16.20	Horizontal
7440.00	21.99	36.59	11.79	31.78	38.59	54.00	-15.41	Horizontal
9920.00	18.67	38.81	14.38	31.88	39.98	54.00	-14.02	Horizontal
12400.00	*					54.00		Horizontal
14880.00	*					54.00		Horizontal

Remark:

1. *Final Level =Receiver Read level + Antenna Factor + Cable Loss – Preamplifier Factor*
2. *"*", means this data is the too weak instrument of signal is unable to test.*
3. *The emission levels of other frequencies are very lower than the limit and not show in test report.*

5. BAND EDGE TEST

5.1 LIMIT

According to §15.249(d), Emissions radiated outside of the specified frequency bands, except for harmonics, shall be attenuated by at least 50 dB below the level of the fundamental or to the general radiated emission limits in §15.209, whichever is the lesser attenuation.

5.2 TEST PROCEDURE

a. The EUT is placed on a turntable, which is 1.5m above ground plane.

b. EUT is set 3m away from the receiving antenna, which is varied from 1m to 4m to find out the highest emissions.

c. Use the following spectrum analyzer settings:
Span = wide enough to fully capture the emission being measured, RBW = 1 MHz, VBW ≥ RBW, Sweep = auto, Detector function = peak, Trace = max hold
Follow the guidelines in ANSI C63.4 with respect to maximizing the emission by rotating the EUT, adjusting the measurement antenna height and polarization, etc.

d. The peak reading of the emission, after being corrected by the antenna factor, cable loss, pre-amp gain, etc., is the peak field strength, submit this data. Each emission was to be maximized by changing the polarization of receiving antenna both horizontal and vertical.

e. Set the VBW to 10 Hz, while maintaining all of the other instrument settings. This peak level, once corrected, must comply with the limit specified in Section 15.209. If the duty cycle per channel of the hopping signal is less than 100 ms, then the reading obtained with the 10 Hz VBW may be further adjusted by a “duty cycle correction factor”, derived from 20log(duty cycle/100 ms), in an effort to demonstrate compliance with the 15.209 limit. Submit this data.

Note:

For fundamental frequency ,RBW>20dB BW ,VBW>RBW,PK detector for PK value, RMS detector for AV value.

5.3 TEST SETUP

Radiated Emission Test-Up Frequency Above 1GHz

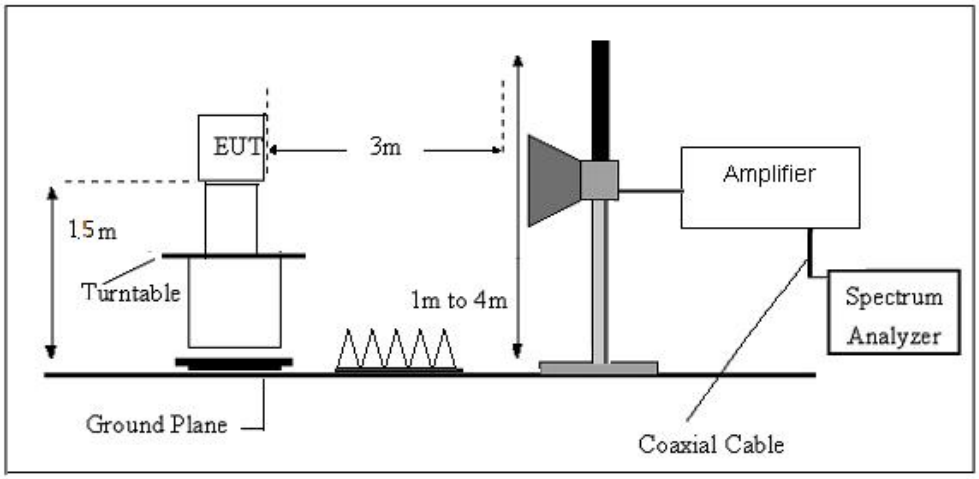

5.4 TEST RESULTS

Low CH (GFSK)

Horizontal

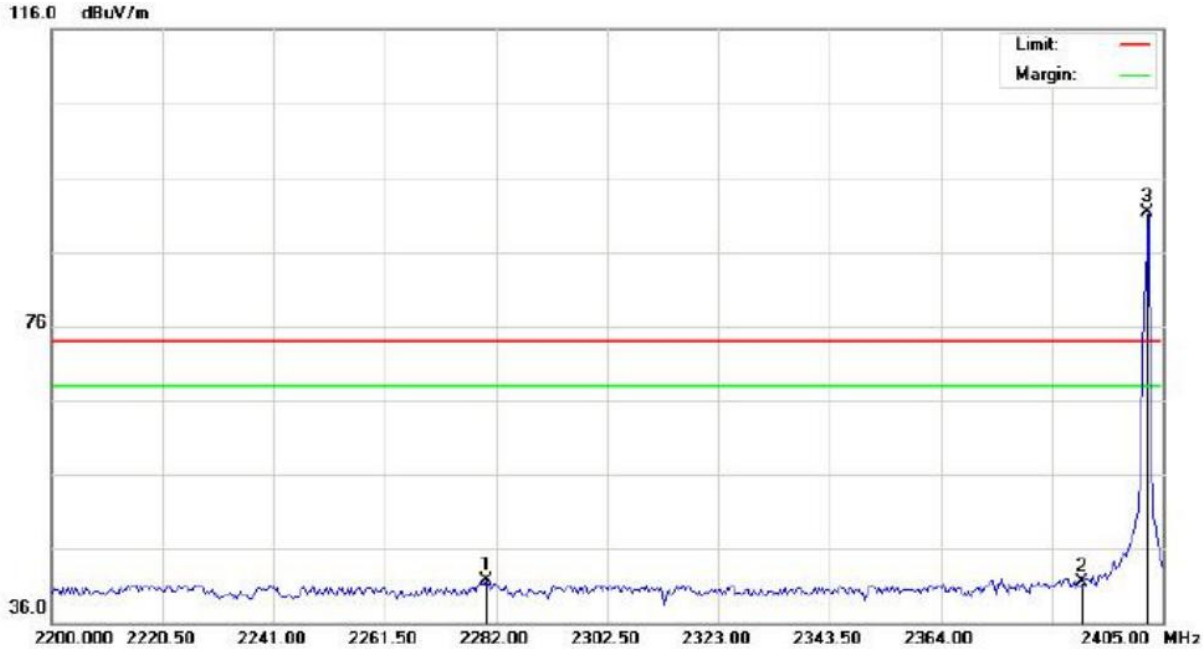

No.	Mk.	Freq.	Reading	Factor	Measurement	Limit	Over	Detector	Comment
		MHz	dBuV	dB/m	dBuV/m	dBuV/m	dB		
1		2280.292	31.51	10.19	41.70	74.00	-32.30	peak	
2		2390.000	31.12	10.31	41.43	74.00	-32.57	peak	
3	*	2402.000	80.91	10.32	91.23	74.00	17.23	peak	

Low CH (GFSK)

Vertical

No.	Mk	Freq.	Reading	Factor	Measurement	Limit	Over	Detector	Comment
	.	MHz	dBuV	dB/m	dBuV/m	dBuV/m	dB		
1		2301.817	31.10	10.21	41.31	74.00	-32.69	peak	
2		2390.000	30.84	10.31	41.15	74.00	-32.85	peak	
3	*	2402.000	80.76	10.32	91.08	74.00	17.08	peak	

High CH(GFSK)

Horizontal

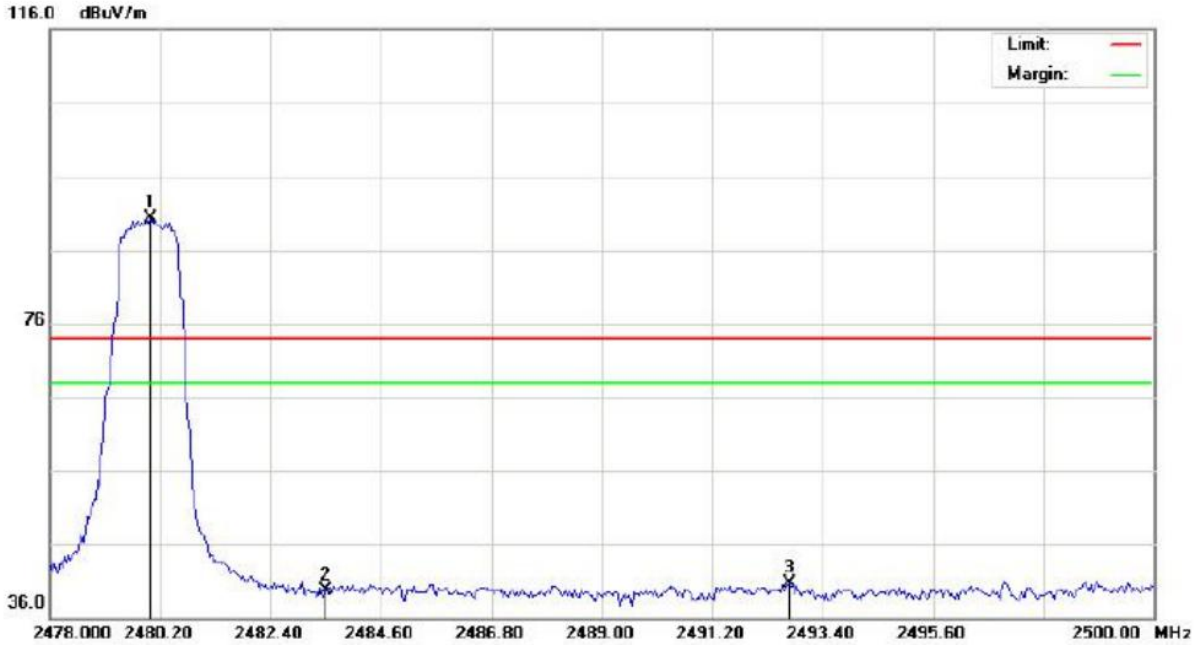

No.	Mk	Freq.	Reading	Factor	Measurement	Limit	Over	Detector	Comment
		MHz	dBuV	dB/m	dBuV/m	dBuV/m	dB		
1	*	2480.000	79.96	10.41	90.37	74.00	16.37	peak	
2		2483.500	29.25	10.41	39.66	74.00	-34.34	peak	
3		2492.740	30.34	10.42	40.76	74.00	-33.24	peak	

Remark:

1. Final Level =Receiver Read level + Antenna Factor + Cable Loss – Preamplifier Factor

High CH(GFSK)

Vertical

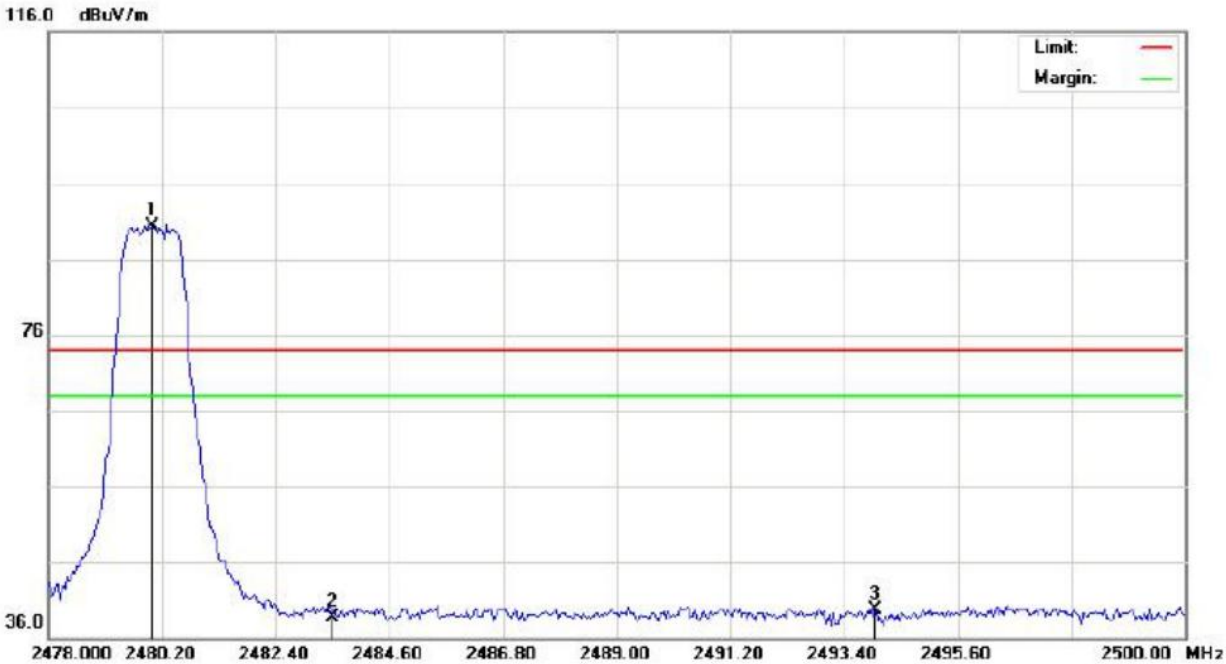

No.	Mk	Freq.	Reading	Factor	Measurement	Limit	Over	Detector	Comment
	-	MHz	dBuV	dB/m	dBuV/m	dBuV/m	dB		
1	*	2480.000	79.85	10.41	90.26	74.00	16.26	peak	
2		2483.500	28.37	10.41	38.78	74.00	-35.22	peak	
3		2493.987	29.29	10.42	39.71	74.00	-34.29	peak	

Remark:

1. Final Level =Receiver Read level + Antenna Factor + Cable Loss – Preamplifier Factor

6. 20 DB BANDWIDTH TEST

6.1 LIMIT

According to 15.215 (c) Intentional radiators operating under the alternative provisions to the general emission limits, as contained in § 15.217 through 15.257 and in Subpart E of this part, must be designed to ensure that the 20 dB bandwidth of the emission, or whatever bandwidth may otherwise be specified in the specific rule section under which the equipment operates, is contained within the frequency band designated in the rule section under which the equipment is operated. The requirement to contain the designated bandwidth of the emission within the specified frequency band includes the effects from frequency sweeping, frequency hopping and other modulation techniques that may be employed as well as the frequency stability of the transmitter over expected variations in temperature and supply voltage. If a frequency stability is not specified in the regulations, it is recommended that the fundamental emission be kept within at least the central 80% of the permitted band in order to minimize the possibility of out-of-band operation

6.2 TEST PROCEDURE

a. Check the calibration of the measuring instrument using either an internal calibrator or a known signal from an external generator

b. Position the EUT without connection to measurement instrument. Turn on the EUT and connect it to measurement instrument. Then set it to any one convenient frequency within its operating range. Set a reference level on the measuring instrument equal to the highest peak value.

c. Measure the frequency difference of two frequencies that were attenuated 20 dB from the reference level. Record the frequency difference as the emission bandwidth.

6.3 TEST SETUP

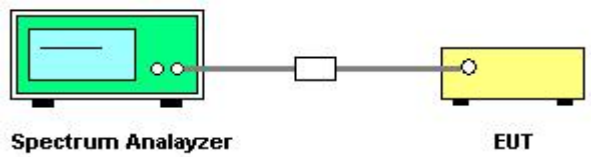

6.4 TEST RESULTS

Temperature:	25℃	Relative Humidity:	50%
Test Mode:	GFSK	Test Voltage:	DC 3.7V

Frequency	20dB Bandwidth (MHz)	Result
2402 MHz	1.099	PASS
2441 MHz	1.098	PASS
2480 MHz	1.096	PASS

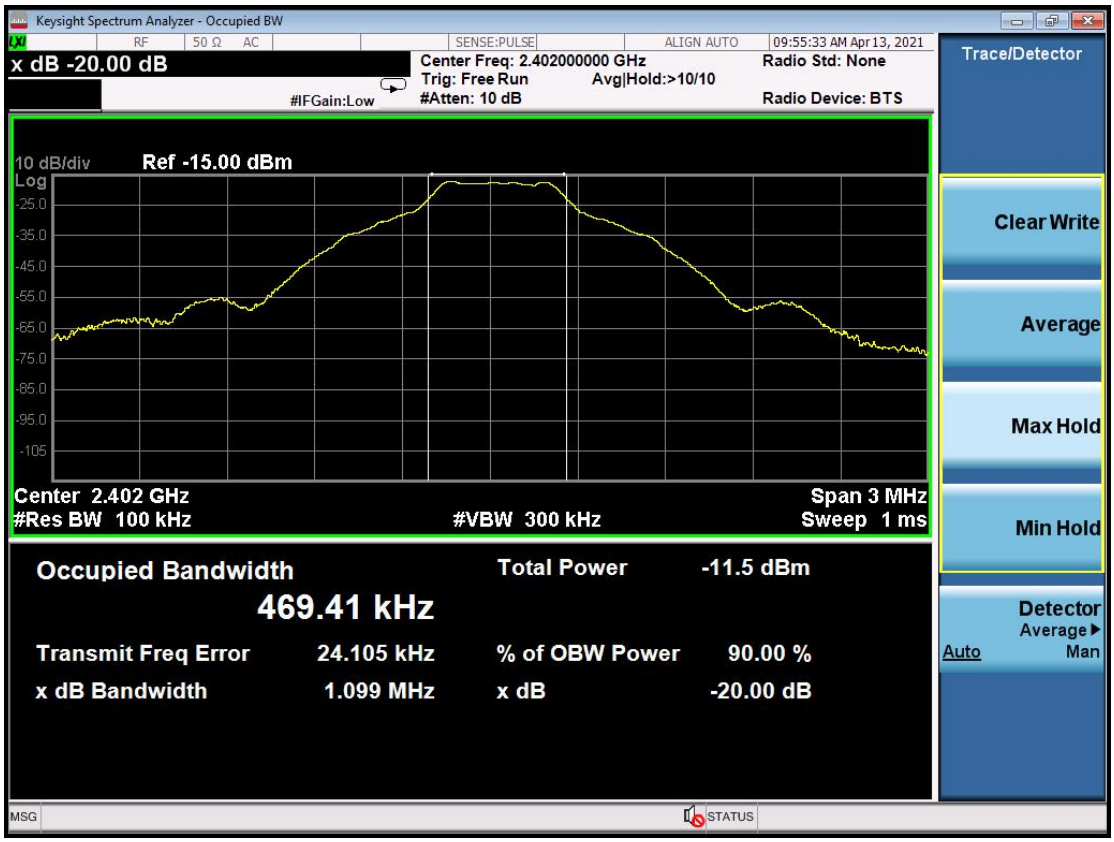

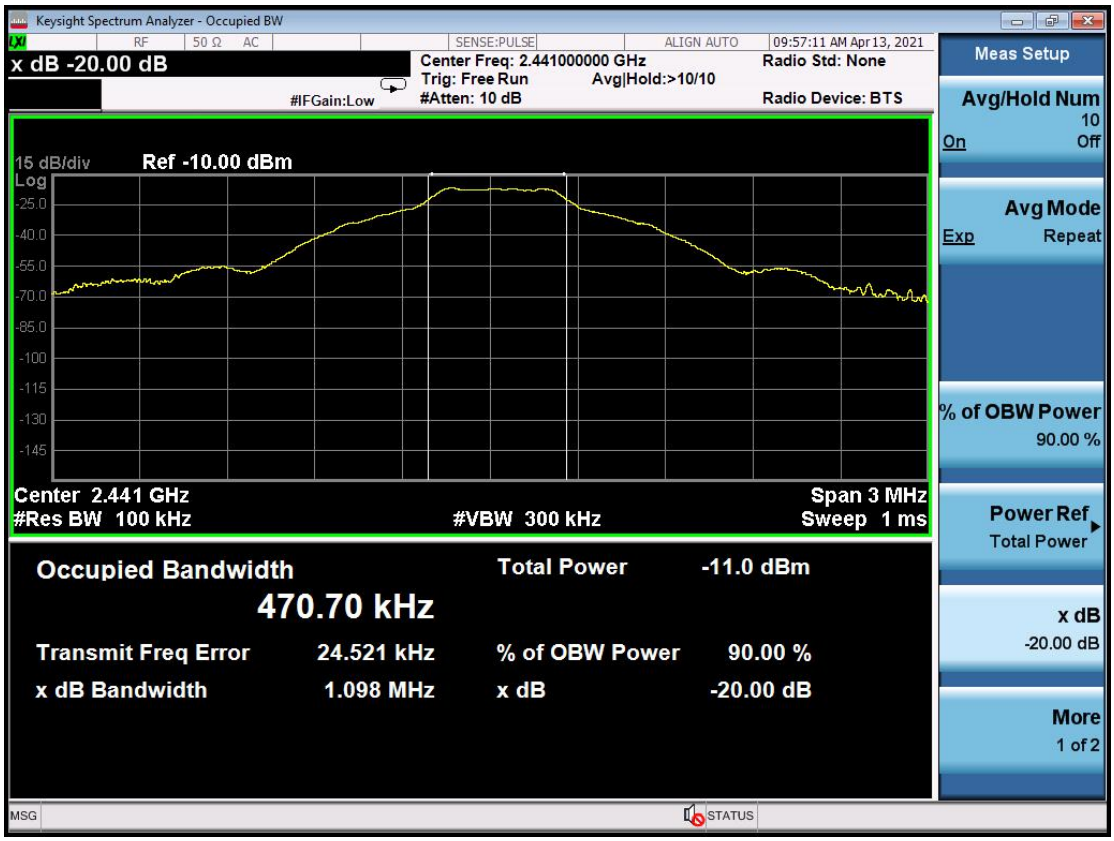
Keysight Spectrum Analyzer - Occupied BW
RF 50 Ω AC
SENSE:PULSE
ALIGN AUTO
09:57:11 AM Apr 13, 2021
x dB -20.00 dB
Center Freq: 2.441000000 GHz
Trig: Free Run
Avg|Hold:>10/10
#Atten: 10 dB
#IFGain:Low
Radio Std: None
Radio Device: BTS
15 dB/div
Ref -10.00 dBm
Log
-25.0
-40.0
-55.0
-70.0
-85.0
-100
-115
-130
-145
Center 2.441 GHz
#Res BW 100 kHz
#VBW 300 kHz
Span 3 MHz
Sweep 1 ms
Occupied Bandwidth
470.70 kHz
Total Power -11.0 dBm
Transmit Freq Error 24.521 kHz
% of OBW Power 90.00 %
x dB Bandwidth 1.098 MHz
x dB -20.00 dB
Meas Setup
Avg/Hold Num
10
On Off
Avg Mode
Exp Repeat
% of OBW Power
90.00 %
Power Ref
Total Power
x dB
-20.00 dB
More
1 of 2
MSG
STATUS

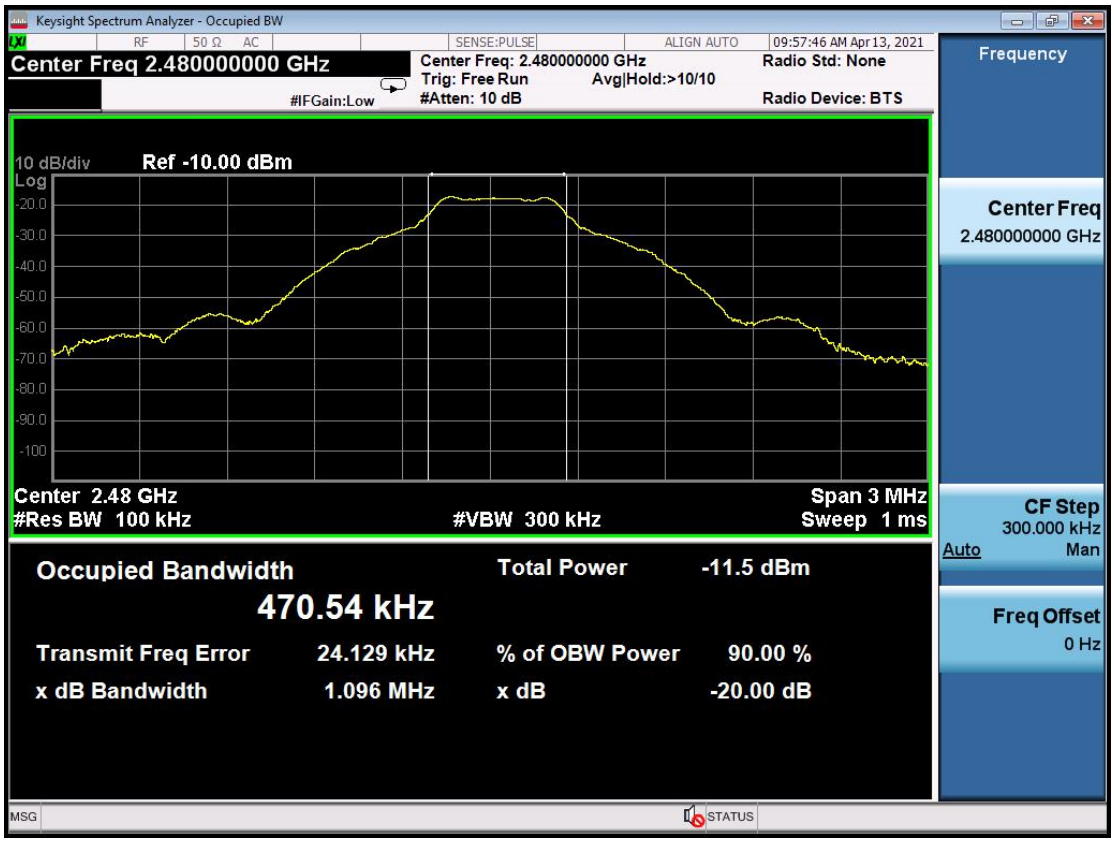
Keysight Spectrum Analyzer - Occupied BW
RF 50 Ω AC
SENSE:PULSE
ALIGN AUTO
09:57:46 AM Apr 13, 2021
Center Freq 2.480000000 GHz
Center Freq: 2.480000000 GHz
Trig: Free Run
Avg|Hold:>10/10
#Atten: 10 dB
#IFGain:Low
Radio Std: None
Radio Device: BTS
10 dB/div
Ref -10.00 dBm
Log
-20.0
-30.0
-40.0
-50.0
-60.0
-70.0
-80.0
-90.0
-100
Center 2.48 GHz
#Res BW 100 kHz
#VBW 300 kHz
Span 3 MHz
Sweep 1 ms
Occupied Bandwidth
470.54 kHz
Total Power -11.5 dBm
Transmit Freq Error 24.129 kHz
% of OBW Power 90.00 %
x dB Bandwidth 1.096 MHz
x dB -20.00 dB
Frequency
Center Freq
2.480000000 GHz
CF Step
300.000 kHz
Auto Man
Freq Offset
0 Hz
MSG
STATUS

Temperature:	25℃	Relative Humidity:	50%
Test Mode:	π/4 DQPSK	Test Voltage:	DC 3.7V

Frequency	20dB Bandwidth (MHz)	Result
2402 MHz	1.179	PASS
2441 MHz	1.214	PASS
2480 MHz	1.210	PASS

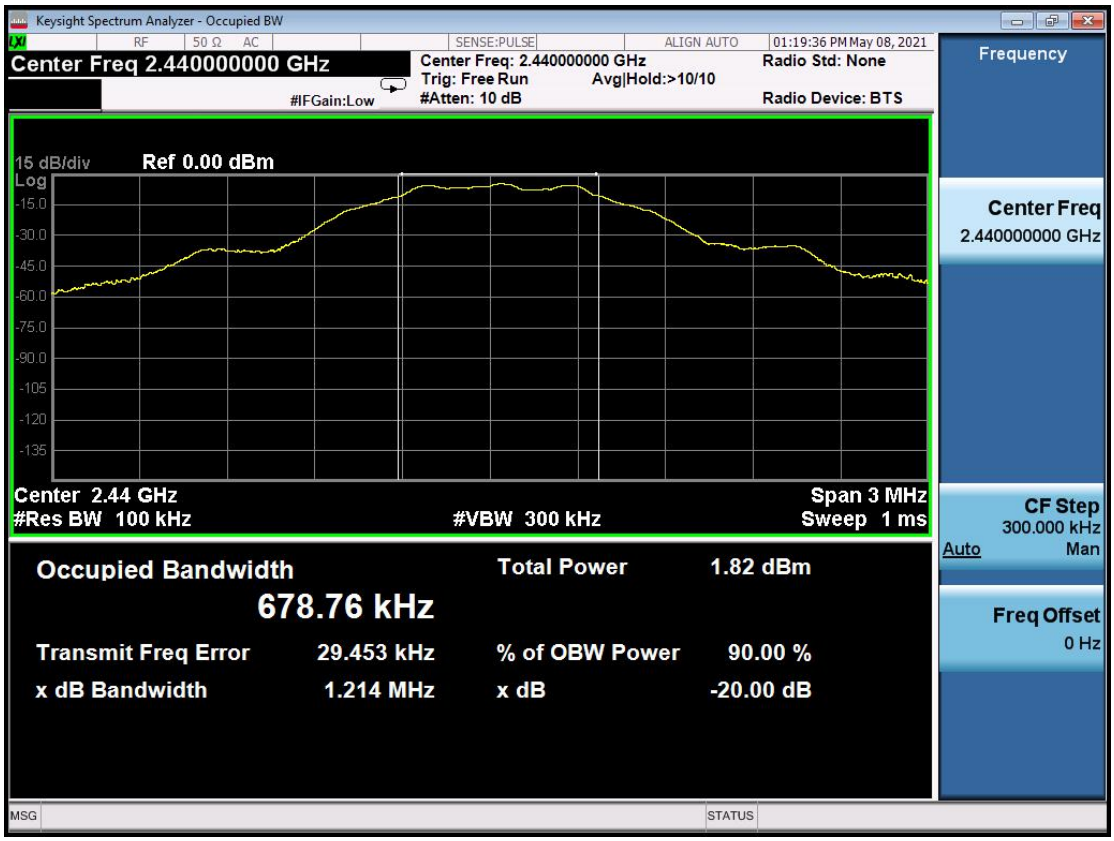
Keysight Spectrum Analyzer - Occupied BW
RF 50 Ω AC
SENSE:PULSE
ALIGN AUTO
01:19:36 PM May 08, 2021
Center Freq 2.440000000 GHz
Center Freq: 2.440000000 GHz
Trig: Free Run
Avg|Hold:>10/10
#Atten: 10 dB
#IFGain:Low
Radio Std: None
Radio Device: BTS
Frequency
15 dB/div
Ref 0.00 dBm
Log
-15.0
-30.0
-45.0
-60.0
-75.0
-90.0
-105
-120
-135
Center 2.44 GHz
#Res BW 100 kHz
#VBW 300 kHz
Span 3 MHz
Sweep 1 ms
Occupied Bandwidth
678.76 kHz
Total Power 1.82 dBm
Transmit Freq Error 29.453 kHz
% of OBW Power 90.00 %
x dB Bandwidth 1.214 MHz
x dB -20.00 dB
Center Freq
2.440000000 GHz
CF Step
300.000 kHz
Auto Man
Freq Offset
0 Hz
MSG
STATUS

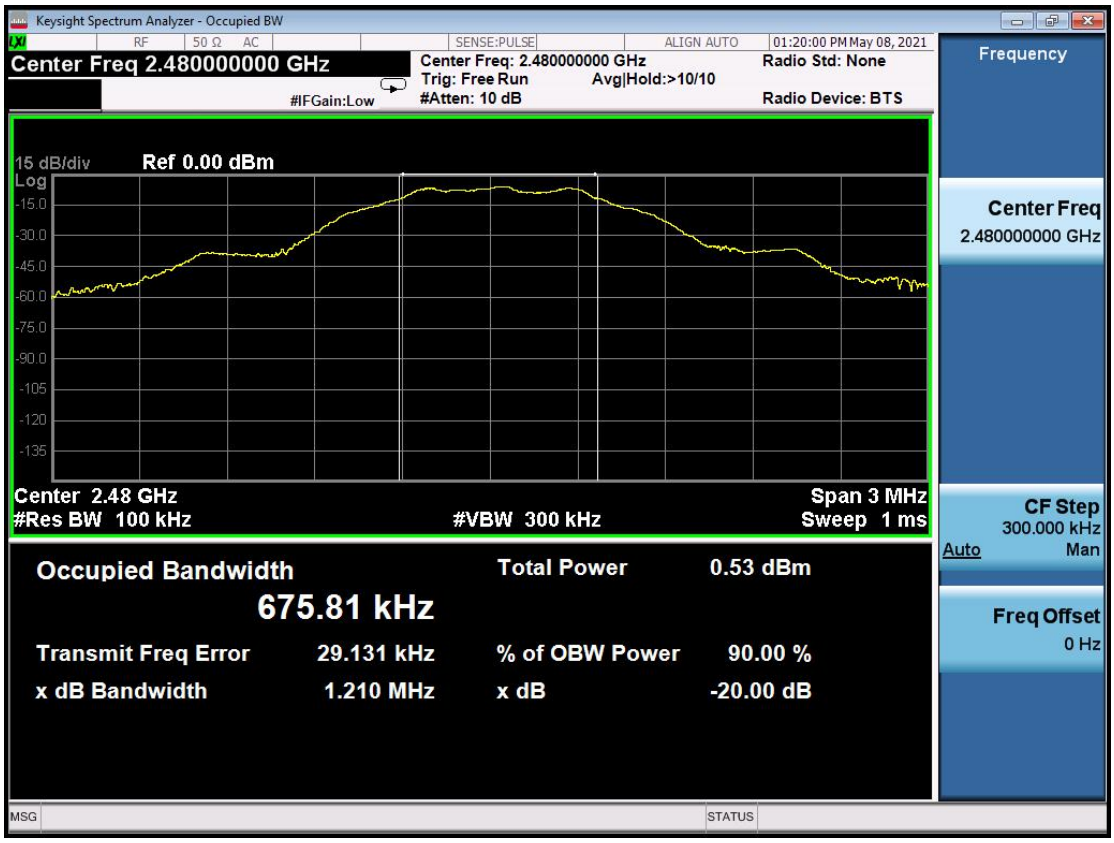
Keysight Spectrum Analyzer - Occupied BW
RF 50 Ω AC
SENSE:PULSE
ALIGN AUTO
01:20:00 PM May 08, 2021
Center Freq 2.480000000 GHz
Center Freq: 2.480000000 GHz
Trig: Free Run
Avg|Hold:>10/10
#Atten: 10 dB
#IFGain:Low
Radio Std: None
Radio Device: BTS
Frequency
15 dB/div
Ref 0.00 dBm
Log
-15.0
-30.0
-45.0
-60.0
-75.0
-90.0
-105
-120
-135
Center 2.48 GHz
#Res BW 100 kHz
#VBW 300 kHz
Span 3 MHz
Sweep 1 ms
Occupied Bandwidth
675.81 kHz
Total Power 0.53 dBm
Transmit Freq Error 29.131 kHz
% of OBW Power 90.00 %
x dB Bandwidth 1.210 MHz
x dB -20.00 dB
Center Freq
2.480000000 GHz
CF Step
300.000 kHz
Auto Man
Freq Offset
0 Hz
MSG
STATUS

7. ANTENNA REQUIREMENT

6.1 STANDARD REQUIREMENT

15.203 requirement: For intentional device, according to 15.203: an intentional radiator shall be designed to ensure that no antenna other than that furnished by the responsible party shall be used with the device.

6.2 EUT ANTENNA

The antennas used for this product are PCB antenna and other than that furnished by the responsible party shall be used with the device, the maximum peak gain of the transmit antenna is 1.0dBi.

※※※※※END OF THE REPORT※※※※※