QUICK START GUIDE

SECURITY BRANDS

RIDGE 2.0

Model **14-REC20**

START HERE

1 Carefully unpack box.

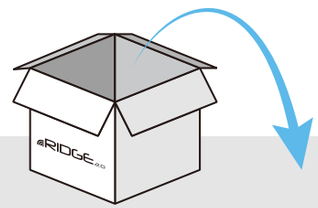

2 Make sure you have all items shown here. (Screwdriver not shown)

Keypad Unit | Receiver | 9-V Battery | Key | Carriage Bolt (4x) | Hex Nut (4x) | Hole Plug | Adhesive Mounting Pad

What's what?

Important components labeled

9-V Battery
Must be installed before use

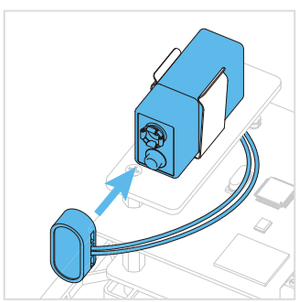

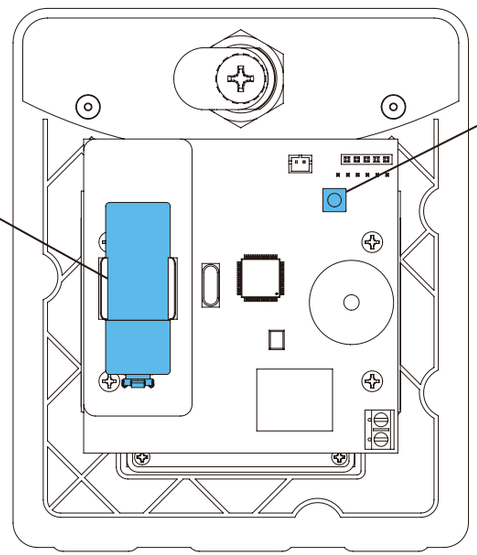

Reset Button
For performing reset procedures on keypad

Keypad Unit

Back of front panel shown.
Internal wiring not shown for clarity.

Connection Terminals
For wiring to compatible AC/DC power source and gate operator or door opener

Relay Status LED
Indicates whether relay is active or inactive (Relay is active when lit)

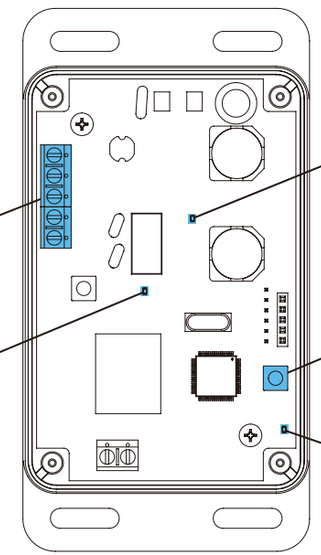

Power LED
Indicates whether or not unit has power

Programming Button
For pairing receiver to keypad

Programming LED
Indicates status of pairing process

Receiver

Shown with cover removed.
Internal wiring not shown for clarity.

QUICK START GUIDE RIDGE 2.0

Model **14-REC20**

3 **Unlock and remove front panel of keypad unit; then using included carriage bolts and hex nuts, attach unit to pedestal as shown.**

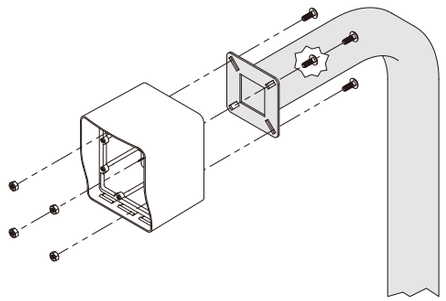

4 **Using Tek screws, zip ties, or included adhesive mounting pad, attach receiver to inside wall or other surface of gate operator.**

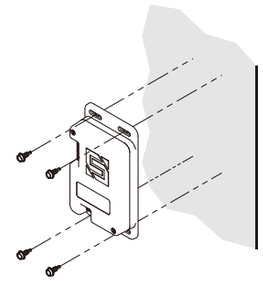

CAUTION!

The receiver is not weatherproof and must be mounted inside a weatherproof enclosure. Internal components can be damaged if exposed to the elements.

Failure to comply will VOID WARRANTY.

WARNING!

AUTOMATIC GATES CAN CAUSE SERIOUS INJURY OR DEATH!

ALWAYS CHECK that the **GATE PATH IS CLEAR BEFORE OPERATING!**

REVERSING or other **SAFETY DEVICES SHOULDALWAYS BE USED!**

5a Connect Receiver

Gate Operator Timer-to-Close
OFF

Ridge Receiver

12–24 VAC/DC
POWER RELAY A

Gate Operator / Door Opener

12–24 VAC/DC
POWER

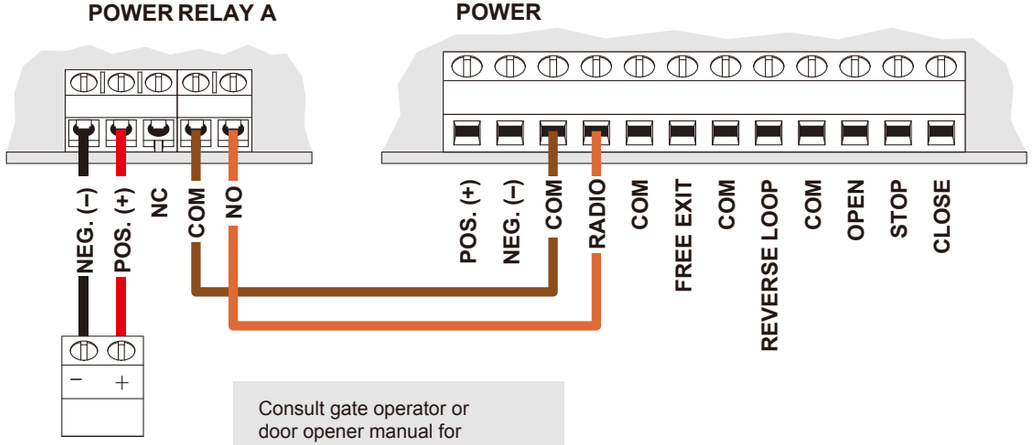

12–24-VAC/DC Power Source (Not Included)

Consult gate operator or door opener manual for exact connections.

Terminals vary widely across manufacturers and models.

OR

5b Connect Receiver

Gate Operator Timer-to-Close
ON

Ridge Receiver

12–24 VAC/DC
POWER RELAY A

Gate Operator / Door Opener

12–24 VAC/DC
POWER

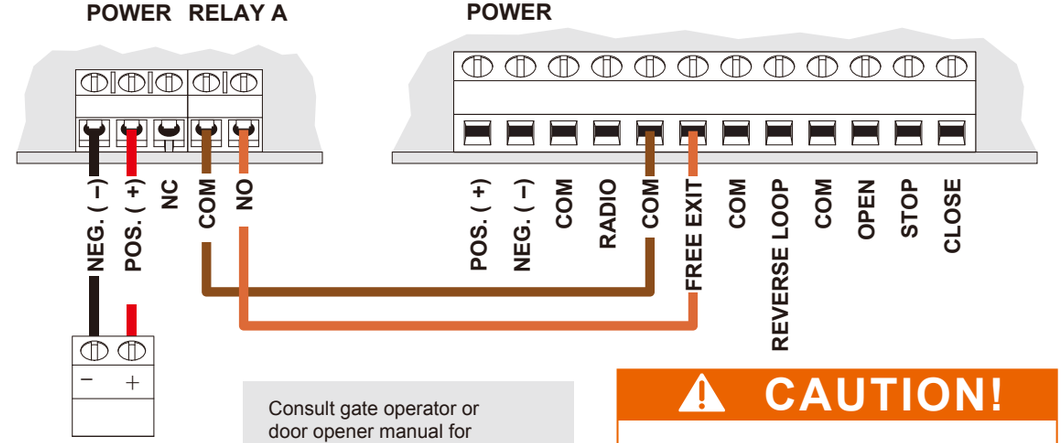

12–24-VAC/DC Power Source (Not Included)

Consult gate operator or door opener manual for exact connections.

Terminals vary widely across manufacturers and models.

CAUTION!

A closing gate can cause injury to persons or damage to property.

ALWAYS USE SAFETY DEVICES!

© 2020 Security Brands, Inc. All rights reserved.

QUICK START GUIDE RIDGE 2.0

Model **14-REC20**

6a Remove receiver cover; then hold down Programming button on circuit board for 3 seconds and let go.

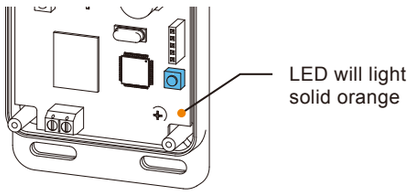

6b Pair keypad unit with receiver by entering sequence below on keypad.(Make sure 9-V battery is connected on keypad unit)

1 2 5 1 → 9 → ? ✳

Master Code (can be changed) — **Channel** (1 for A, 2 for B)

NOTE: Green arrow indicates "good" tone on keypad unit.

6c While pairing, keypad unit will beep and flash Once receiver LED goes out and "good" tone is heard on keypad unit, pairing is complete.

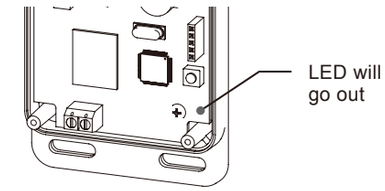

7 Add Access Code(s) to Channel A.

(To add multiple codes, enter each of them before pressing pound key)

1 2 5 1 → 1 → ? ? ? ? → #

Master Code (can be changed) — **Sub Mode** — **Access Code(s)** (4 digits; numbers only)

NOTE: The Master Code is for programming only and will not trigger the relay.

8 Make sure gate path is clear; then enter access code on keypad and con firm gate opens.

(If keypad locks up, repeat Step 6)

INSTALLATION COMPLETE!

Your system is ready to use.

A1 Additional programming

Delete Code(s)

(To delete multiple codes, enter each of them before pressing pound key)

1 2 5 1 → 2 → ? ? ? ? → #

Master Code (can be changed) — **Sub Mode** — **Code(s) to Be Deleted** (4 digits; numbers only)

Set Unique Keypad ID

(Allows multiple keypad units and receivers to be used. If Keypad ID is changed, keypad unit and receiver must be paired again.)

1 2 5 1 → 9 → 5 → ? ? ? ? → #

Master Code (can be changed) — **Sub Mode** — **Unique Keypad ID** (4 digits; numbers only)

NOTE: Green arrow indicates "good" tone on keypad unit.
Always wait for good tone before moving on.

A2 Additional programming (continued)

Change Master Code

1 2 5 1 → 3 → ? ? ? ? → #

Current Master Code (1251 is default) | **Sub Mode** | **New Master Code** (4 digits; numbers only)

Add Latch Code

1 2 5 1 → 5 → ? → ? ? ? ? → #

Master Code (can be changed) | **Sub Mode** | **Channel** (1 for A, 2 for B) | **Latch Code** (4 digits; numbers only)

Add One-Time-Use Code (Channel A ONLY)

1 2 5 1 → 8 → ? ? ? ? → ? → #

Master Code (can be changed) | **Sub Mode** | **One-Time-Use Code** (4 digits; numbers only) | **# of Uses** (1–9)

Add Access Code(s) to Channel B

(To add multiple codes, enter each of them before pressing pound key)

1 2 5 1 → 7 → ? ? ? ? → #

Master Code (can be changed) | **Sub Mode** | **Access Code(s)** (4 digits; numbers only)

Delete All Codes (Cannot Be Undone)

1 2 5 1 → 0 → 1 2 5 1 →

Master Code (can be changed) | **Sub Mode** | **Master Code Again**

Keypad unit will beep and flash while erasing memory then sound "good" tone when complete.

Set Relay Output Time

1 2 5 1 → 6 → ? → ? ? ? #

Master Code (can be changed) | **Sub Mode** | **Channel** (1 for A, 2 for B) | **Seconds** (000–999)

Configure Three Strikes, You're Out

(This feature is designed to deter unauthorized users who enter an incorrect code three times in a row. When this happens, the keypad unit will sound an alarm for 30 seconds, and then it will go into a period of lockdown for a full 90 seconds.)

Check Status

1 2 5 1 → 4 → 2 → 🔊 → #

Master Code (can be changed) | **Sub Mode** | **Current State** (On: 1 beep; Off: 2 beeps)

Toggle On or Off

1 2 5 1 → 4 → 2 → 🔊 → 1 2 5 1 → #

Master Code (can be changed) | **Sub Mode** | **Current State** (On: 1 beep; Off: 2 beeps) | **Master Code Again**

NOTE: Green arrow indicates "good" tone on keypad unit.
Always wait for good tone before moving on.

© 2020 Security Brands, Inc. All rights reserved.

Programming Sub Modes

1	Add Access Code(s) to Channel A	8	Add One-Time-Use Code (Channel A)
2	Delete Code(s)	9	Pairing and Setting Keypad ID
3	Change Master Code	0	Delete All Codes
4	Configure “Three Strikes, You’re Out”		
5	Add Latch Code		
6	Set Relay Output Time		
7	Add Access Code(s) to Channel B		

Things to Know

The Star Key (*)

The star key deletes your current entry.
If you happen to make a mistake keying in a code, simply press the star key to delete the entire entry and start over.

The Pound Key (#)

The pound key is good for one thing and one thing only: exiting Programming Mode. Whenever you’re in Programming Mode, simply press the pound key to get out.

Reset Procedures

If for some reason the Master Code is forgotten or the unit needs to be reset to factory defaults, two reset procedures are available: Master Reset and Unit Reset .

These procedures can be found in Section B .

B Reset Procedures

NOTE: If an error is made during these procedures, an “error” tone will sound and you must start again from the beginning.

Master Reset

(Used if the Master Code is unknown, if the Latch Code is unknown and the unit is in Latch Mode, or if the Sleep Code is unknown and the unit is in Sleep Mode. All other codes will be retained after completing this procedure.)

Step 1 - Remove front panel of keypad unit.

Step 2 - Disconnect battery.

Step 3 - Press and hold Reset Button; reconnect battery; then release Reset Button.
Unit will sound one (1) tone. Release Reset Button after you hear tone.

Step 4 - Press Star key (*) on keypad three (3) times and wait up to 30 seconds.

Step 5 - Reattach front panel onto keypad unit.

The Master Code is now reset to default (**1251**).

Unit Reset

(Used to reset unit to factory default settings. The Master Code will be retained.)

CAUTION: FOLLOWING THIS PROCEDURE WILL DELETE ALL CODES BUT MASTER CODE!

Step 1 - Remove front panel of keypad unit.

Step 2 - Disconnect battery.

Step 3 - Press and hold Reset Button; reconnect battery; then release Reset Button.
Unit will sound one (1) tone. Release Reset Button after you hear tone.

Step 4 - Enter Pound (#) Star (*) Pound (#) on keypad. (Unit will sound “good” tone.)

Step 5 - Enter 1251 (Master Code) on keypad. (Unit will beep continuously.)

Step 6 - While unit is beeping, disconnect and reconnect battery.
Unit will then go through power-up procedure.

Step 7 - Reattach front panel onto keypad unit.

The unit is now reset to factory default settings. Follow **Master Reset** to reset Master Code.

QUICK START GUIDE RIDGE 2.0

Model **14-REC20**

Notes

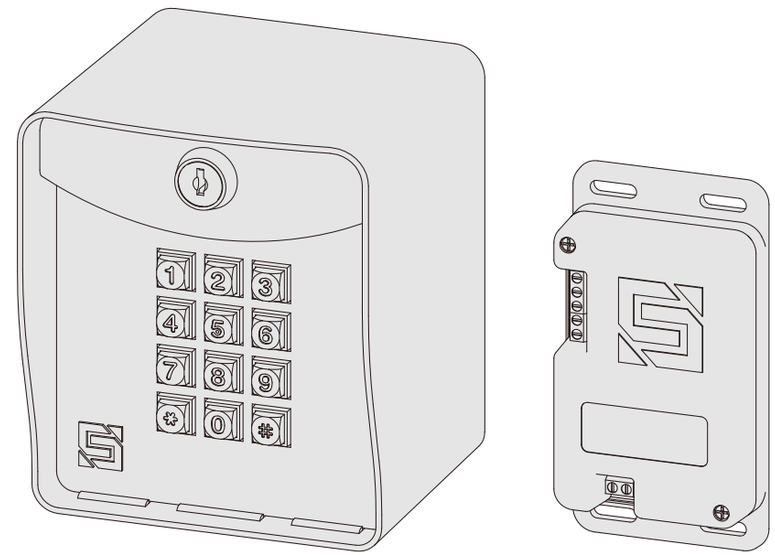

Ridge 2.0
14-500

NEED HELP

Call **(972) 474-6390**
Email **techsupport@securitybrandsinc.com**

We are available **Mon–Fri / 8am–5pm Central**

SECURITY BRANDS INC™
your *partner* in access control

QSG-14500-EN Rev. B (6/2020)

© 2020 Security Brands, Inc. All rights reserved.

FCC Statement:

Any Changes or modifications not expressly approved by the party responsible for compliance could void the user's authority to operate the equipment. This device complies with part 15 of the FCC Rules. Operation is subject to the following two conditions:

(1) This device may not cause harmful interference, and

(2) This device must accept any interference received, including interference that may cause undesired operation.

Note: This equipment has been tested and found to comply with the limits for a Class B digital device, pursuant to part 15 of the FCC Rules. These limits are designed to provide reasonable protection against harmful interference in a residential installation. This equipment generates, uses and can radiate radio frequency energy and, if not installed and used in accordance with the instructions, may cause harmful interference to radio communications. However, there is no guarantee that interference will not occur in a particular installation. If this equipment does cause harmful interference to radio or television reception, which can be determined by turning the equipment off and on, the user is encouraged to try to correct the interference by one or more of the following measures:

—Reorient or relocate the receiving antenna.

—Increase the separation between the equipment and receiver.

—Connect the equipment into an outlet on a circuit different from that to which the receiver is connected.

—Consult the dealer or an experienced radio/TV technician for help.