Toilet Installation

Installation Steps

1.Lift the cover upward, unscrew the ring wash flex hose, the main jet flex hose and the foot sensor cable. Remove the cover.

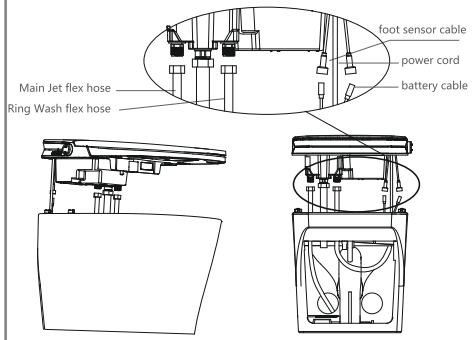

2. Place the installation template as shown below. Confirm rough in. Trace the toilet back and side profile using the hollowed lines on template.

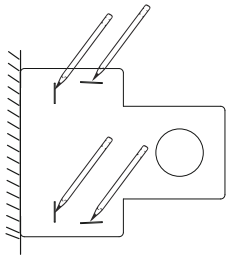

3. Install the supplied angle valve on the corresponding position on the wall.

4. Place the bolts into the flange grooves.

5. Install wax ring centering it on the flange.

6. Install the ceramic aligning the contour line you traced. (Note: the fixing bolts need to pass through the holes at the bottom of the ceramic.)

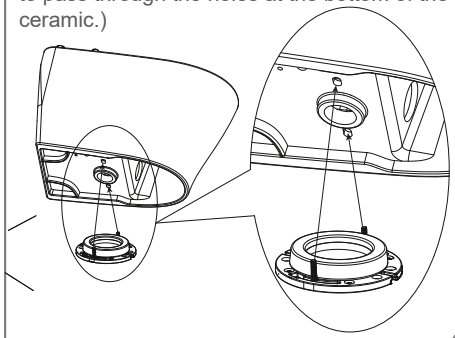

Install Toilet

Installation Steps

7. Install the washers and locking nuts securing the toilet to the flange.

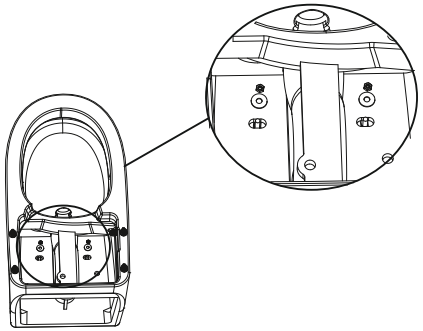

8.Install the ring wash flex hose, the main jet flex hose and the foot sensor connection cable.Align 4 posts in the ceramic with the holes in the back part of the cover and push down.

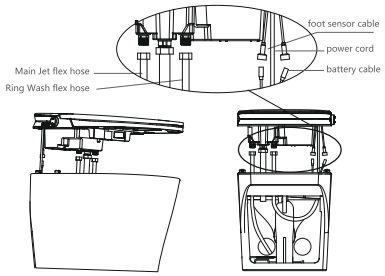

9.Connect the supply line to the angle valve.

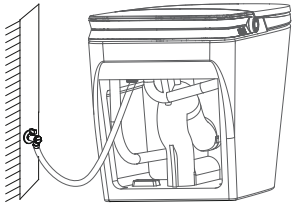

Testing after Installation

1.Turn on the angle valve

- Open the angle valve a little bit. Check for leaks.
- Open the valve completely after checking everything is dry.

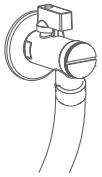

2.Product self-diagnosis

- After connecting to the power supply, the product will give a "beep" sound. Knob lamp will go on indicating the completion of self-diagnosis.

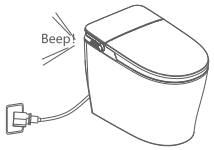

3.Product test

Flushing test

- Press the flush button on the knob to flush the toilet.

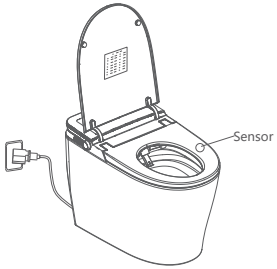

3.Drainage inspection

Before applying the caulking, please flush the toilet several times to see if there is any leakage in the ceramic. After inspection caulk around the ceramic. Make sure that the ceramic is sealed in place.

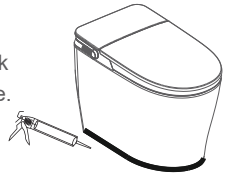

Function Description

Power-on Self-diagnosis

1. Each time the toilet is plugged in, all lights will be on, a "beep" will sound and all functions will be reset to factory settings.
2. Seat temperature will reset to 91℉ (33℃).

Knob Functions

1.Turn the knob clockwise to raise the seat temperature. Turn the knob counterclock wise to lower the seat temperature.

- Prompt sound "didi" indicates highest temperature level has been reached.
- Prompt sound "di" indicates lower one level of temperature.
- Prompt "long beep" indicates seat heating is off.

2.Short press the knob to perform a big flush.

3.When nobody is seated, long press the knob to turn all lights on/off.

4.When someone is seated, long press the knob to turn the prompt sound on/off.

Other Function Description

Other Functions

1. Low temperature scald prevention seat function.
   After sitting down, the system will enter the low-temperature scald prevention mode automatically.
2. Foot sensor lid/seat open and flushing function
   (1)When both the lid and seat are closed, the lid will open automatically once the user touches the foot sensor area.
   (2) When the lid is open and seat is closed, the seat will open automatically once the user touches the foot sensor area.
   (3) When the lid and seat are open, both of them will close and start small flushing once the user touches the foot sensor area.

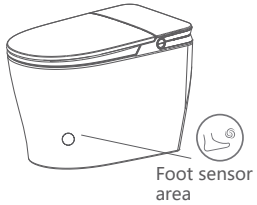

3. Automatic flush
   The toilet will close seat, close lid and flush automatically after 1 minute of leaving the toilet area (If a flush is executed before the lid closed, the toilet won't flush automatically again.)
4. Auto lid open function
   (1) When someone walks to the toilet and into the sensing area, the lid will open automatically.
   (2) The lid will close automatically after 1 minute someone leaves the sensing area.

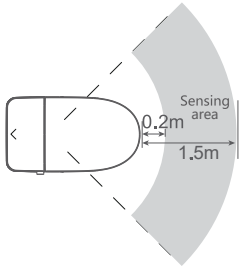

Other function description

5. Power off flush function
   When power is off, the lithium battery will take over. Short press the knob to flush. No other functions will work. The batteries should last for 100 flushes.

Changing / adding batteries

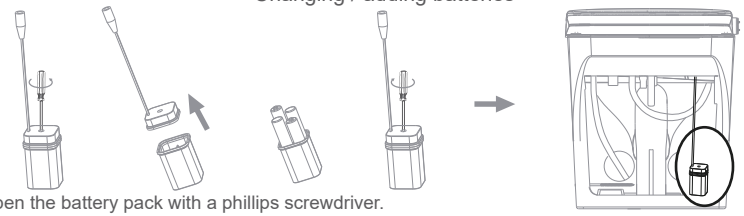

1.Open the battery pack with a phillips screwdriver.
2.Remove the battery tray.
3.Load 4 size AA batteries into the battery tray being careful with the polarity of the batteries.
4.Reassemble the battery pack and install in the toilet.

Reminder

1. This toilet is designed to flush using batteries during a power outage. Check batteries at least once a year to ensure they are in good working condition.
2. Strictly follow the "+" and "-" signs in the battery pack when inserting batteries.Reverse connecting batteries may cause battery damage and safety hazards such as explosion or combustion.
3. Only size AA batteries should be used. Old and new batteries should not be mixed. Different models and brands of batteries should not be mixed. When replacing batteries, all of them should be replaced at the same time.
4. Handle battery pack with care. After replacing the batteries, make sure the battery pack is securely locked and sealed to prevent bathroom moisture from entering the compartment (this could cause battery corrosion and damage).
5. When replacing batteries, disconnect the battery compartment from the main unit.
6. DO NOT USE RECHARGEABLE BATTERIES.

Cleaning and Maintenance

1.Maintenance of product surface and ceramics.

The detachable accessories can be removed before maintenance

Note before maintenance:

(1)Make sure the power supply is disconnected.

(2) Do not let water enter the product during the maintenance process.

(3) Be sure to wipe off any detergent after cleaning to avoid residue at the gap between the main ceramic body and the cover.

- Product surface cleaning

  Wet a soft cloth with water, wring it, and then wipe the product. If the toilet is dirty, you can use a soft cloth with a little of diluted neutral detergent to clean it. Then use a clean damp cloth to wipe it clean.

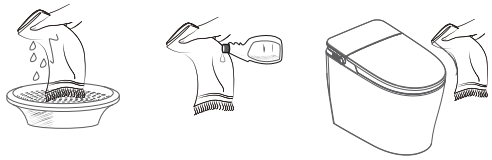

2.Maintenance of valve if water performance is low

1. Turn off the angle valve. Unscrew the filter screen cap at the front of the valve with a straight screwdriver.
2. Use a small brush to scrub the filter screen, and flush away debris with clean water.
3. Reinstall the filter on to the angle valve and tighten it.

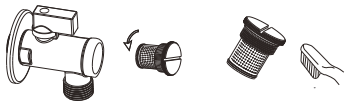

Troubleshootings

Problem	Check	►	Solution
The toilet does not work.	Check whether cloth covers, cushions, etc. are being used on the seat sensing area.	►	Remove cloth covers, cushions or any other item.
	Check if there is a power outage.	►	Wait for power supply recovery.
	Check if the plug is loose or making poor contact	►	Plug in to ensure good power supply.
	Check if there has been electricity leakage (the GFCI receptacle indicator light is off or the GFCI breaker has tripped)	►	Unplug the power plug. Press the reset button on the GFCI receptacle or reset the GFCI breaker. If it still does not work, contact customer service.
The seat is not heating	Check if the seat temperature is set to low or off.	►	Reset the seat temperature using the seat temperature knob.
	Check if there is a power outage.	►	Wait for power supply recovery.
Toilet light and knob light don't work.	Check if the fault still exists after doing a reset by unplugging, waiting 30 seconds and re-plugging unit..	►	Contact customer service.
The toilet does not flush.	Angle valve is closed.	►	Open the angle valve.
	The filter is blocked.	►	Refer to Maintenance of the Valve.
The toilet doesn't flush properly.	The filter is blocked.	►	Refer to Maintenance of the Valve.

Product Technical Parameters

Items		TC012B
Rated Voltage		120V ~ , 60Hz
Rated Power*		25W
Power Cord Length		about 1.1m
Water Supply Pressure		Min. Dynamic pressure: 20psi (0.14 MPa). Max. Static pressure: 110psi (0.75MPa).
Water Supply Temperature		41~95℉(5~35℃)
Waterproof Level		IPX4
Toilet Flush		≤1.26G(4.8L)
Seat Ring Heating	Heater power	50W
	Safety equipment	Thermostat + fuse
	Surface temperature	3 levels: aprox. 91/100 ℉/off (33/38 ℃/off)
Others	Antibacterial material	Seat ring
	Low temperature scald protection	Included
	Prompt for abnormalities	Alarm sound
	Seat sensing	Included
	Light control	Included

Rated Power:
This product's energy consumption is tested under the following conditions: at an ambient temperature of 73±3.6℉,with the seat heating set to its maximum temperature setting. The test is conducted after the seat heating has stabilized for 15 minutes, measuring the power consumption over five cycles of 3 minutes each, and then calculating the average.

Product Environmental information

Part name	Harmful substances					
	(Pb)	(Hg)	(Cd)	(Cr(VI))	(PBB)	(PBDE)
PCBA	X	O	O	O	O	O
Plastic parts	O	O	O	O	X	X
The motor	X	O	O	X	O	O
Others	X	O	O	O	O	O

This form is prepared according to the provisions of SJ/T11364

O : Indicates that the content of the hazardous substance in all homogeneous materials of the component is below the limit specified in CB/T26572

X : Indicates that the content of the hazardous substance in all homogeneous materials of the component exceeds the limit specified by CB/T26572

The number in this label indicates that the environmental protection period of the product in normal use is 10 years

WARRANTY

CTM Maison Elite Inc. grants this limited warranty to the original purchaser of this Smart Toilet from the date of purchase. Proof of purchase is required when requesting any warranty assistance.

Ceramic,imited 10 years: If any of the ceramic parts of your Smart Toilet fails during your first 10 years of ownership due to a defect in material or workmanship, as determined solely by CTM Maison Elite Inc, we will provide you with a replacement ceramic basin.If no replacement ceramic can be provided for your Smart Toilet, we will provide a comparable or superior replacement ceramic or Smart Toilet at our sole discretion.

Other Parts, Limited One year:CTM Maison Elite Inc. warrants that all other parts, to be free from defects in workmanship and material at the time of manufacture for a period of one year. We agree to send a replacement part without charge or at our option replace it with a comparable or superior part.

To the extent permitted by law, CTM Maison Elite Inc. disclaims any and all warranties.including but not limited to those of merchantability and fitness for a particular purpose.There is no other express warranty. The duration of any implied warranty which cannot be disclaimed is limited to the period specified in the express warranty. Some states do not allow a limitation on how long an implied warranty lasts. The time limitation may not apply to you. Some states do not allow the exclusion of incidental or consequential damages, so the above limitation may not apply to you. This warranty gives specific legal rights. You may also have other rights which vary from state to state. The retailer shall not beliable for incidental, consequential, or damages arising out ofor in connection with product use or performance except as may otherwise be accorded by law.

This limited warranty is non-transferable and only to the original purchaser of this Waste Disposer and will be void if unit is removed from its original installation.

This warranty does not cover: ordinary wear and tear, minor cosmetic blemishes, batteries light bulbs, refurbished units, Smart Toilets that are not owned by the original purchaser,acts of God, plugging, overflowing, flooding, changes in finish including pitting, tarnishing,calcium or mineral deposit marks.

Damage to any part by accident, misuse, abuse, improper installation, improper care and maintenance, improper electric supply or power surge, failure to follow the in structions in the enclosed manual or by any modification to the unit are not covered by this warranty.

All costs of shipping parts, removing, repair labour and reinstalling the product are not covered by this warranty. Please do not ship your Smart Toilet or any parts to CTM Maison Elite Inc. Shipment will not be accepted.

This warranty supersedes al prior warranties.

FOR WARRANTY PURPOSES PLEASE REGISTER YOUR PRODUCT.

Customer Care

Thank you for purchasing a FORNO ACQUA product. Please read the entire instruction manual before operating your newappliance for the first time. Whether you are an occasional user or an expet, it will be beneficial to familiarize yourself with the safety practices, features, operation and care recommendations of your appliance. Both the model number and serial number are listed on the product., For warranty purposes, you will also need the date of purchase. Record this infomation below for future reference.

Record this information below for future reference

Product Information	Service Information
Model Number: _____	Use these numbers in any correspondence or services calls concerning your appliance.
Serial Number: _____	If you received a damaged appliance, immediately contact the dealer (or builder) that sold you the appliance.
Date of Purchase: _____	Save time and money. Before you call for service, check the Troubleshooting Guide. It lists the causes of minor operating problems that you can correct yourself.
Purchase Address And Phone: _____	
_____	
_____	

CUSTOMER SERVICE:

Keep the instruction manual handy to answer your questions. If you don't understand something or you need more assistance, please call our Customer Service: ***1-866-231-8893*** or emai: ***mysupport@fornoworld.com***

Our contact:CTM Maison Elite inc.
11420 Albert Hudon, Montréal, Québec H1G 3J6, Canada

The instruction manual can be downloaded from www.fornoworld.com.