FCC TEST REPORT
FCC ID:2AZ8L-M300T

Report Number..... :	ZKT-210618L2727-02
Date of Test.....	Jun. 01, 2021 -- Jun. 17, 2021
Date of issue ..... :	Jun. 17, 2021
Total number of pages	28
Test Result ..... :	PASS
Testing Laboratory..... :	Shenzhen ZKT Technology Co., Ltd.
Address ..... :	1/F, No. 101, Building B, No. 6, Tangwei Community Industrial Avenue, Fuhai Street, Bao'an District, Shenzhen, China
Applicant's name ..... :	Dongguan Benni Electronic Technology Co., Ltd.
Address ..... :	Room 302 Building 8, No. 966 Zhenxing Road Xiegang Town, Dongguan Guangdong China 523592
Manufacturer's name ..... :	Dongguan Lingjie Electronics & Technology Co., Ltd
Address ..... :	Building 3, No. 23 Zhenxing North Road, Taiyuan Community, Xiegang Town, Dongguan City, Guangdong Province, 523590,
Test specification:	
Standard..... :	FCC CFR Title 47 Part 15 Subpart C Section 15.249 ANSI C63.10:2013
Test procedure..... :	/
Non-standard test method ..... :	N/A
Test Report Form No. ..... :	TRF-EL-111_V0
Test Report Form(s) Originator .... :	ZKT Testing
Master TRF ..... :	Dated: 2020-01-06

This device described above has been tested by ZKT, and the test results show that the equipment under test (EUT) is in compliance with the FCC requirements. And it is applicable only to the tested sample identified in the report.
This report shall not be reproduced except in full, without the written approval of ZKT, this document may be altered or revised by ZKT, personal only, and shall be noted in the revision of the document.

Product name..... :	Wireless mouse
Trademark ..... :	BRESII
Model/Type reference ..... :	M300T, M310T, M320T, M330T, M340T, M350T, M360T, M370T, M380T, M390T
Ratings..... :	DC 1.5V

Testing procedure and testing location:

Testing Laboratory.....:	**Shenzhen ZKT Technology Co., Ltd.**
Address.....:	1/F, No. 101, Building B, No. 6, Tangwei Community Industrial Avenue, Fuhai Street, Bao'an District, Shenzhen, China
Tested by (name + signature).....:	Alen He
Reviewer (name + signature).....:	Joe Liu
Approved (name + signature).....:	Lake Xie

Table of Contents **Page**

1.VERSION 5
2.1SUMMARY OF TEST RESULTS 6
2.1TEST FACILITY 7
2.2 MEASUREMENT UNCERTAINTY 7
3. GENERAL INFORMATION 8
3.1 GENERAL DESCRIPTION OF EUT 8
3.2 DESCRIPTION OF TEST MODES 9
3.3 BLOCK DIGRAM SHOWING THE CONFIGURATION OF SYSTEM TESTED 9
3.4 DESCRIPTION OF SUPPORT UNITS(CONDUCTED MODE) 9
3.5 EQUIPMENTS LIST FOR ALL TEST ITEMS 10
4. EMC EMISSION TEST 11
4.1 CONDUCTED EMISSION MEASUREMENT 11
4.1.1 POWER LINE CONDUCTED EMISSION LIMITS 11
4.1.2 TEST PROCEDURE 11
4.1.3 DEVIATION FROM TEST STANDARD 11
4.1.4 TEST SETUP 12
4.1.5 EUT OPERATING CONDITIONS 12
4.1.6 TEST RESULTS 12
4.2 RADIATED EMISSION MEASUREMENT 13
4.2.1 RADIATED EMISSION LIMITS 13
4.2.2 TEST PROCEDURE 14
4.2.3 DEVIATION FROM TEST STANDARD 14
4.2.4 TEST SETUP 14
4.2.5 EUT OPERATING CONDITIONS 15
5. BANDWIDTH OF FREQUENCY BAND EDGE 21
5.1 TEST REQUIREMENT: 21
5.2 TEST PROCEDURE 21
5.3 DEVIATION FROM TEST STANDARD 22
5.4 TEST SETUP 22
5.5 EUT OPERATING CONDITIONS 22
5.6 TEST RESULT 23
6. CHANNEL BANDWIDTH 24
6.1 APPLIED PROCEDURES / LIMIT 24
6.2 TEST PROCEDURE 24
6.3 DEVIATION FROM STANDARD 24
6.4 TEST SETUP 24

Table of Contents **Page**

6.5 EUT OPERATION CONDITIONS 24
6.6 TEST RESULTS 25
7. ANTENNA REQUIREMENT 27
8. TEST SETUP PHOTO 28
9. EUT CONSTRUCTIONAL DETAILS 29

1.VERSION

Report No.	Version	Description	Approved
ZKT-210618L2727-02	Rev.01	Initial issue of report	Jun. 17, 2021

2.1SUMMARY OF TEST RESULTS

Test procedures according to the technical standards:

FCC Part15 (15.249) , Subpart C			
Standard Section	Test Item	Judgment	Remark
FCC part 15.203	Antenna requirement	PASS	
FCC part 15.207	AC Power Line Conducted Emi sion	N/A	
FCC part 15.249	Fundamental &Radiated Spurious Emission Measurement	PASS	
FCC part 15.215(c)	20dB Channel Bandwidth	PASS	
FCC part 15.205	Band Edge	PASS	

NOTE:

(1)" N/A" denotes test is not applicable in this Test Report

2.1TEST FACILITY

Shenzhen ZKT Technology Co., Ltd.
Add. : 1/F, No. 101, Building B, No. 6, Tangwei Community Industrial Avenue, Fuhai Street, Bao'an District, Shenzhen, China

FCC Test Firm Registration Number: 692225
Designation Number: CN1299
IC Registered No.: 27033

2.2 MEASUREMENT UNCERTAINTY

The reported uncertainty of measurement y ± U，where expended uncertainty U is based on a standard uncertainty multiplied by a coverage factor of k=2，providing a level of confidence of approximately 95 %。

No.	Item	Uncertainty
1	Conducted Emission Test	±1.38dB
2	RF power conducted	±0.16dB
3	Spurious emissions conducted	±0.21dB
4	All emissions radiated(<1G)	±4.68dB
5	All emissions radiated(>1G)	±4.89dB
6	Temperature	±0.5°C
7	Humidity	±2%

3. GENERAL INFORMATION

3.1 GENERAL DESCRIPTION OF EUT

Product Name:	Wireless mouse
Model No.:	M300T
Model Different.:	M310T, M320T, M330T, M340T, M350T, M360T, M370T, M380T, M390T
Serial No.:	N/A
Hardware Version:	V1.0
Software Version:	V3.0
Sample(s) Status:	Engineer sample
Channel numbers:	40
Channel separation:	2402MHz~2480MHz
Modulation technology:	GFSK
Antenna Type:	PCB Antenna
Antenna gain:	1.8 dBi Max
Power supply:	DC 1.5V from battery

Operation Frequency each of channel							
Channel	Frequency	Channel	Frequency	Channel	Frequency	Channel	Frequency
1	2402	11	2422	21	2442	31	2462
2	2404	12	2424	22	2444	32	2464
3	2406	13	2426	23	2446	33	2466
4	2408	14	2428	24	2448	34	2468
5	2410	15	2430	25	2450	35	2470
6	2412	16	2432	26	2452	36	2472
7	2414	17	2434	27	2454	37	2474
8	2416	18	2436	28	2456	38	2476
9	2418	19	2438	29	2458	39	2478
10	2420	20	2440	30	2460	40	2480

Note:
In section 15.31(m), regards to the operating frequency range over 10 MHz, the Lowest frequency, the middle frequency, and the highest frequency of channel were selected to perform the test, and the selected channel see below:

Test channel	**Frequency**
The lowest channel	2402MHz
The middle channel	2440MHz
The Highest channel	2480MHz

3.2 DESCRIPTION OF TEST MODES

Transmitting mode	Keep the EUT in continuously transmitting mode
Remark: During the test, the test voltage was tuned from 85% to 115% of the nominal rated supply voltage, and found that the worst case was under the nominal rated supply condition. So the report just shows that condition's data.	

Test Software	Test Tool
Power level setup	<0dBm

3.3 BLOCK DIGRAM SHOWING THE CONFIGURATION OF SYSTEM TESTED

Conducted Emission

N/A (not applicable to this device, which is powered by dry battery)

Radiated Emission

EUT

3.4 DESCRIPTION OF SUPPORT UNITS(CONDUCTED MODE)

The EUT has been tested as an independent unit together with other necessary accessories or support units. The following support units or accessories were used to form a representative test configuration during the tests.

Item	Equipment	Mfr/Brand	Model/Type No.	Series No.	Note
E-1	Tablet PC	N/A	M10	N/A	EUT

Item	Shielded Type	Ferrite Core	Length	Note

Note:

(1) The support equipment was authorized by Declaration of Confirmation.
(2) For detachable type I/O cable should be specified the length in cm in『Length』column.

3.5 EQUIPMENTS LIST FOR ALL TEST ITEMS

Radiation Test equipment

Item	Equipment	Manufacturer	Type No.	Serial No.	Last calibration	Calibrated until
1	Spectrum Analyzer (9kHz-26.5GHz)	KEYSIGHT	9020A	MY45109572	Sep. 22, 2020	Sep. 21, 2021
2	Spectrum Analyzer (1GHz-40GHz)	Agilent	E4446A	100363	Sep. 22, 2020	Sep. 21, 2021
3	Test Receiver (9kHz-7GHz)	R&S	ESCI7	101169	Sep. 22, 2020	Sep. 21, 2021
4	Bilog Antenna (30MHz-1400MHz)	Schwarzbeck	VULB9168	00877	Sep. 22, 2020	Sep. 21, 2021
5	Horn Antenna (1GHz-18GHz)	SCHWARZBECK	BBHA9120D	1541	Sep. 22, 2020	Sep. 21, 2021
6	Horn Antenna (18GHz-40GHz)	A.H. System	SAS-574	588	Sep. 22, 2020	Sep. 21, 2021
7	Amplifier (30-1000MHz)	EM Electronics	EM330 Amplifier	N/A	Sep. 22, 2020	Sep. 21, 2021
8	Amplifier (1GHz-40GHz)	QUANJUDA	DLE-161	097	Sep. 22, 2020	Sep. 21, 2021
9	Loop Antenna (9KHz-30MHz)	SCHWARZBECK	FMZB1519B	014	Sep. 22, 2020	Sep. 21, 2021
10	RF cables1 (9kHz-30MHz)	N/A	9kHz-30MHz	N/A	Sep. 22, 2020	Sep. 21, 2021
11	RF cables2 (30MHz-1GHz)	N/A	30MHz-1GHz	N/A	Sep. 22, 2020	Sep. 21, 2021
12	RF cables3 (1GHz-40GHz)	N/A	1GHz-40GHz	N/A	Sep. 22, 2020	Sep. 21, 2021
13	CMW500 Test	R&S	CMW500	106504	Sep. 22, 2020	Sep. 21, 2021
14	ESG Signal Generator	Agilent	E4421B	GB40051203	Sep. 22, 2020	Sep. 21, 2021
15	Signal Generator	Agilent	N5182A	MY47420215	Sep. 22, 2020	Sep. 21, 2021
16	D.C. Power Supply	LongWei	TPR-6405D	\	\	\
17	Software	Frad	EZ-EMC	FA-03A2 RE	\	\

Conduction Test equipment

Item	Kind of Equipment	Manufacturer	Type No.	Serial No.	Last calibration	Calibrated until
1	LISN	R&S	ENV216	101471	Sep. 22, 2020	Sep. 21, 2021
2	LISN	CYBERTEK	EM5040A	E1850400149	Sep. 22, 2020	Sep. 21, 2021
3	Test Cable	N/A	C01	N/A	Sep. 22, 2020	Sep. 21, 2021
4	Test Cable	N/A	C02	N/A	Sep. 22, 2020	Sep. 21, 2021
5	EMI Test Receiver	R&S	ESRP3	101946	Sep. 22, 2020	Sep. 21, 2021
6	Absorbing Clamp	DZ	ZN23201	N/A	Sep. 22, 2020	Sep. 21, 2021

4. EMC EMISSION TEST

4.1 CONDUCTED EMISSION MEASUREMENT

Test Requirement:	FCC Part15 C Section 15.207
Test Method:	ANSI C63.10:2013
Test Frequency Range:	150KHz to 30MHz
Receiver setup:	RBW=9KHz, VBW=30KHz, Sweep time=auto

4.1.1 POWER LINE CONDUCTED EMISSION Limits

FREQUENCY (MHz)	Limit (dBuV)		Standard
	Quas -peak	Average	
0.15 -0.5	66 - 56 *	56 - 46 *	FCC
0.50 -5.0	56.00	46.00	FCC
5.0 -30.0	60.00	50.00	FCC

Note:

(1) *Decreases with the logarithm of the frequency.

4.1.2 TEST PROCEDURE

a. The EUT was placed 0.8 meters from the horizontal ground plane with EUT being connected to the power mains through a line impedance stabilization network (LISN). All other support equipments powered from additional LISN(s). The LISN provide 50 Ohm/ 50uH of coupling impedance for the measuring instrument.
b. Interconnecting cables that hang closer than 40 cm to the ground plane shall be folded back and forth in the center forming a bundle 30 to 40 cm long.
c. I/O cables that are not connected to a peripheral shall be bundled in the center. The end of the cable may be terminated, if required, using the correct terminating impedance. The overall length shall not exceed 1 m.
d. LISN at least 80 cm from nearest part of EUT chassis.
e. For the actual test configuration, please refer to the related Item –EUT Test Photos.

4.1.3 DEVIATION FROM TEST STANDARD

No deviation

4.1.4 TEST SETUP

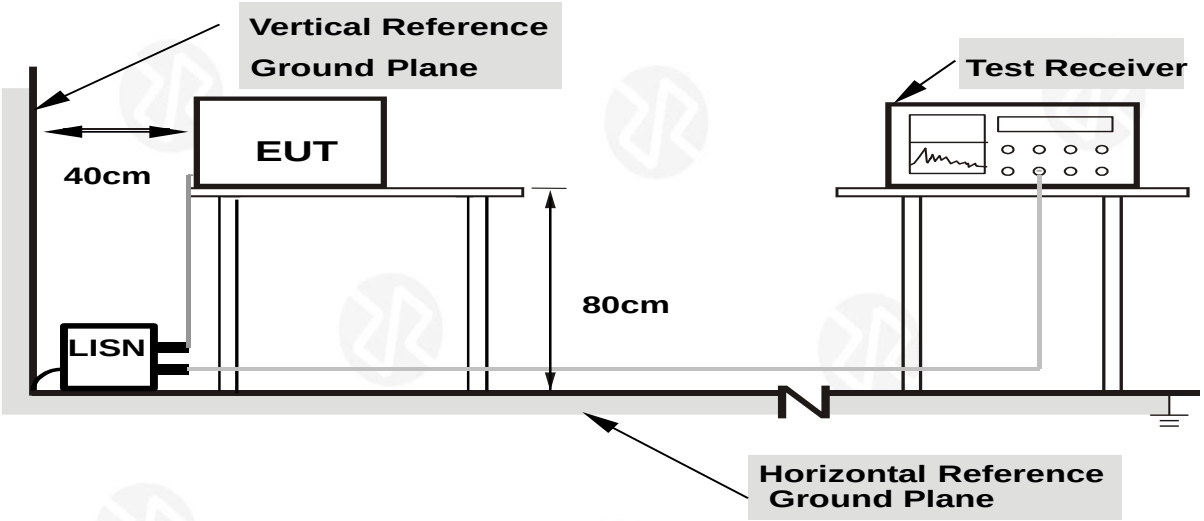

Note: 1.Support units were connected to second LISN.
2.Both of LISNs (AMN) are 80 cm from EUT and at least 80 from other units and other metal planes

4.1.5 EUT OPERATING CONDITIONS

The EUT was configured for testing in a typical fashion (as a customer would normally use it). The EUT has been programmed to continuously transmit during test. This operating condition was tested and used to collect the included data.

4.1.6 TEST RESULTS

N/A
（The product is powered by AAA batteries. This test item is not applicable）

4.2 RADIATED EMISSION MEASUREMENT

Test Requirement:	FCC Part15 C Section 15.209
Test Method:	ANSI C63.10:2013
Test Frequency Range:	9kHz to 25GHz
Test site:	Measurement Distance: 3m
Receiver setup:	

Frequency	Detector	RBW	VBW	Value
9KHz-150K z	Quasi-peak	200Hz	600Hz	Quasi-peak
150KHz-30MHz	Quasi-peak	9KHz	30KHz	Quasi-peak
30MHz-1GHz	Quasi-peak	100KHz	300KHz	Quasi-peak
Above 1GHz	Peak	1MHz	3MHz	Peak
	Peak	1MHz	10Hz	Average

4.2.1 RADIATED EMISSION LIMITS

Frequencies (MHz)	Field Strength (micorvolts/meter)	Measurement Distance (meters)
0.009~0.490	2400/F(KHz)	300
0.490~1.705	24000/F(KHz)	30
1.705~30.0	30	30
30~88	100	3
88~216	150	3
216~960	200	3
Above 960	500	3

The field strength of emissions from intentional radiators operated within these frequency bands shall comply with the following:

Fundamental frequency	Field strength of fundamental (millivolts/meter)	Field strength of harmonics (microvolts/meter)
902-928 MHz	50	500
2400-2483.5 MHz	50	500
5725-5875 MHz	50	500
24.0-24.25 GHz	250	2500

LIMITS OF RADIATED EMISSION MEASUREMENT

FREQUENCY (MHz)	Limit (dBuV/m) (at 3M)	
	PEAK	AVERAGE
Above 1000	74	54

Notes:

(1) The limit for radiated test was performed according to FCC PART 15C.

(2) The tighter limit applies at the band edges.

(3) Emission level (dBuV/m)=20log Emission level (uV/m).

4.2.2 TEST PROCEDURE

a. The measuring distance of at 3 m shall be used for measurements at frequency up to 25GHz. For frequencies above 1GHz, any suitable measuring distance may be used.
b. The EUT was placed on the top of a rotating table 0.8 meters above the ground at a 3 meter semi-chamber test. The table was rotated 360 degrees to determine the position of the highest radiation.
c. The height of the equipment or of the substitution antenna shall be 0.8m; above 1GHz, the height was 1.5m, the height of the test antenna shall vary between 1 m to 4 m. Both horizontal and vertical polarizations of the antenna are set to make the measurement.
d. The initial step in collecting conducted emission data is a spectrum analyzer peak detector mode pre-scanning the measurement frequency range. Significant peaks are then marked and then Quasi Peak detector mode re-measured.
e. If the Peak Mode measured value compliance with and lower than Quasi Peak Mode Limit, the EUT shall be deemed to meet QP Limits and then no additional QP Mode measurement performed.
f. For the actual test configuration, please refer to the related Item –EUT Test Photos.
g. For the radiated emission test above 1GHz:
Place the measurement antenna away from each area of the EUT determined to be a source of emissions at the specified measurement distance, while keeping the measurement antenna aimed at the source of emissions at each frequency of significant emissions, with polarization oriented for maximum response.
The measurement antenna may have to be higher or lower than the EUT, depending on the radiation pattern of the emission and staying aimed at the emission source for receiving the maximum signal. The final measurement antenna elevation shall be that which maximizes the emissions. The measurement antenna elevation for maximum emissions shall be restricted to a range of heights of from 1 m to 4 m above the ground or reference ground plane.
Note:
Both horizontal and vertical antenna polarities were tested
and performed pretest to three orthogonal axis. The worst case emissions were reported

4.2.3 DEVIATION FROM TEST STANDARD

No deviation

4.2.4 TEST SETUP

（A）Radiated Emission Test-Up Frequency Below 30MHz

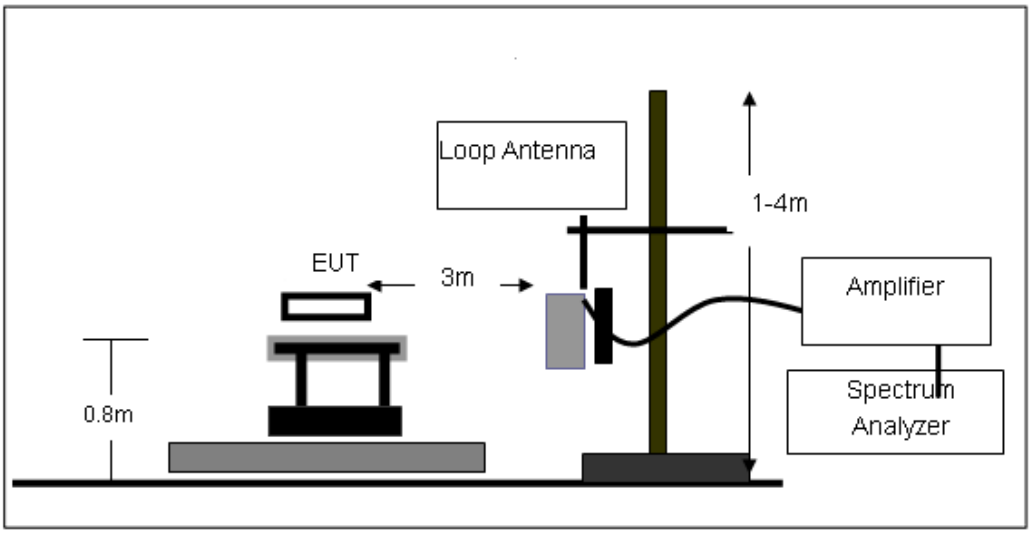

（B）Radiated Emission Test-Up Frequency 30MHz~1GHz

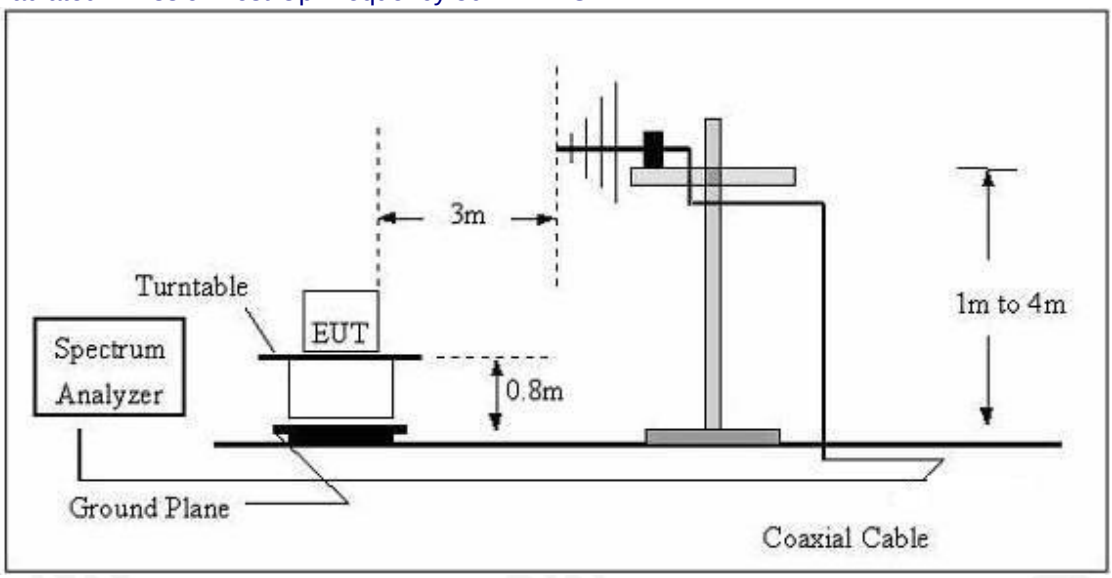

（C）Radiated Emission Test-Up Frequency Above 1GHz

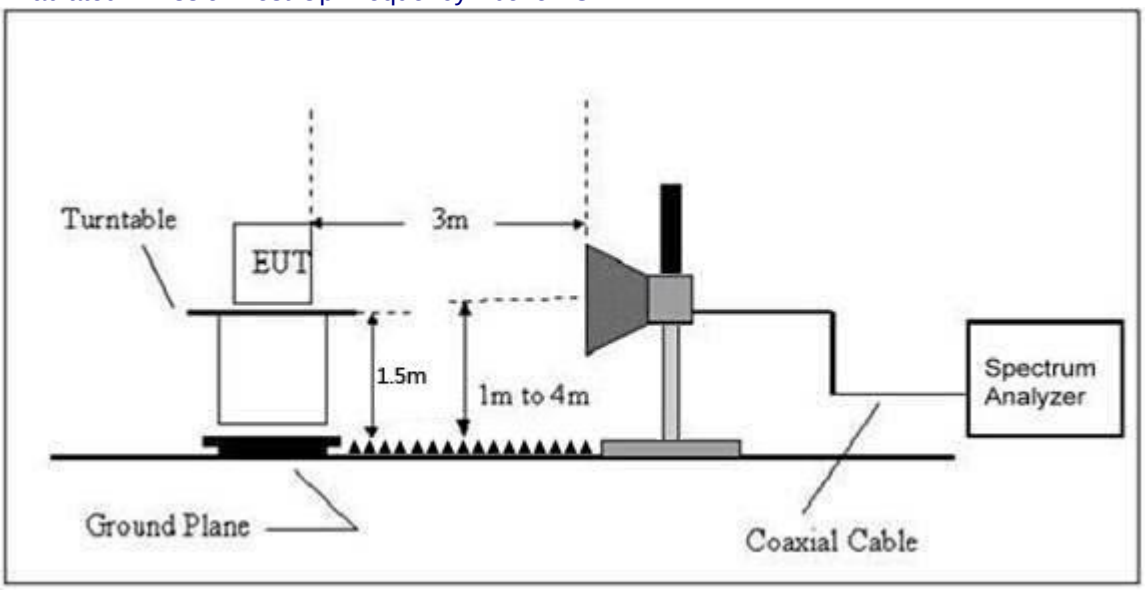

4.2.5 EUT OPERATING CONDITIONS

The EUT tested system was configured as the statements of 2.4 Unless otherwise a special operating condition is specified in the follows during the testing.

4.2.6 TEST RESULTS

Field Strength of Fundamental:

Frequency (MHz)	Emission (dBuV/m)	PK/AV	Ant. Pol.	Limits PK/AV (dBuV/m)	Margin (dB)
2403.85	91.28	PK	H	114	-22.72
2403.85	75.71	AV	H	94	-18.29
2441.85	90.58	PK	H	114	-23.42
2441.85	77.92	AV	H	94	-16.08
2479.85	91.94	PK	H	114	-22.06
2479.85	77.43	AV	H	94	-16.57
2403.85	92.14	PK	V	114	-21.86
2403.85	76.03	AV	V	94	-17.97
2441.85	91.97	PK	V	114	-22.03
2441.85	77.69	AV	V	94	-16.31
2479.85	91.88	PK	V	114	-22.12
2479.85	77.98	AV	V	94	-16.02

Spurious Emissions:

Between 9KHz – 30 MHz

The emission from 9 kHz to 30MHz was pre-tested and found the result was 20dB lower than the limit, and according to 15.31(o) & RSS-Gen 6.13, the test result no need to reported.

Between 30MHz – 1GHz

Temperature:	26℃	Relative Humidity:	54%
Pressure:	101 kPa	Polarization:	Horizontal
Test Voltage:	DC1.5V		

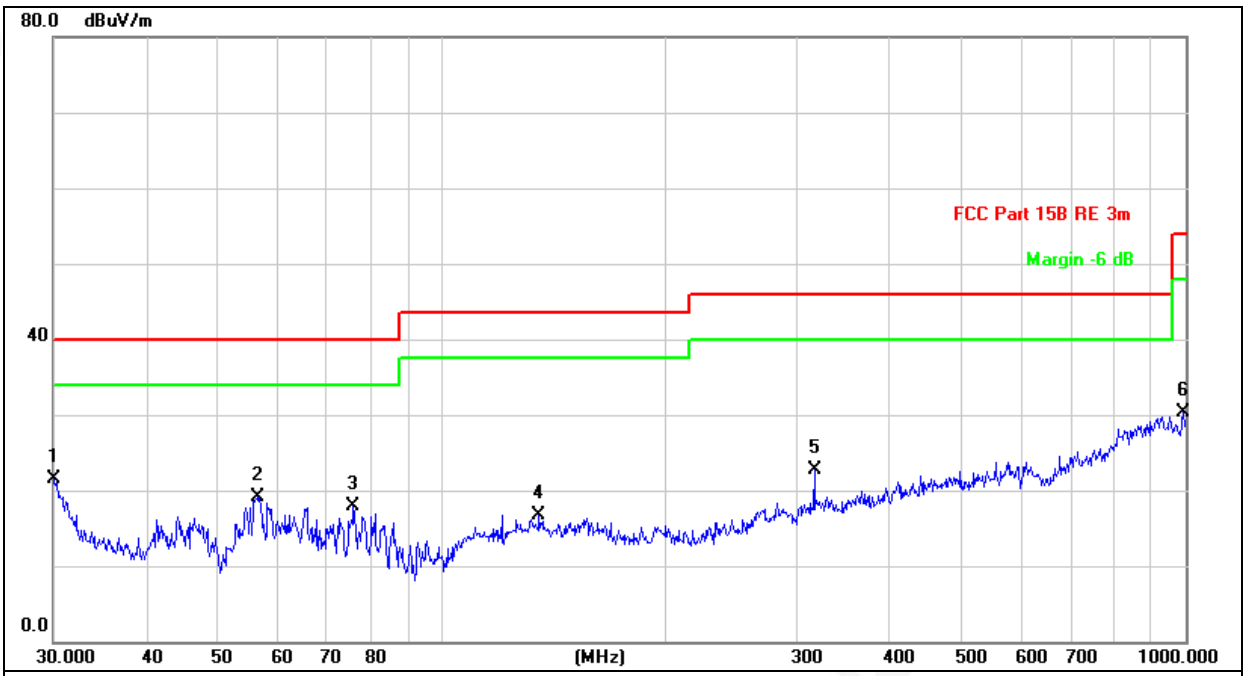

No.	Mk.	Freq.	Reading Level	Correct Factor	Measure-ment	Limit	Over		Antenna Height	Table Degree	
		MHz	dBuV	dB/m	dBuV/m	dBuV/m	dB	Detector	cm	degree	Comment
1	*	30.1054	20.04	1.43	21.47	40.00	-18.53	QP			
2		56.5929	35.62	-16.51	19.11	40.00	-20.89	QP			
3		75.9773	31.44	-13.58	17.86	40.00	-22.14	QP			
4		135.0319	21.98	-5.30	16.68	43.50	-26.82	QP			
5		316.5890	26.12	-3.43	22.69	46.00	-23.31	QP			
6		993.0114	23.27	7.06	30.33	54.00	-23.67	QP			

Temperature:	26℃	Relative Humidity:	54%
Pressure:	101kPa	Polarization:	Vertical
Test Voltage:	DC1.5V		

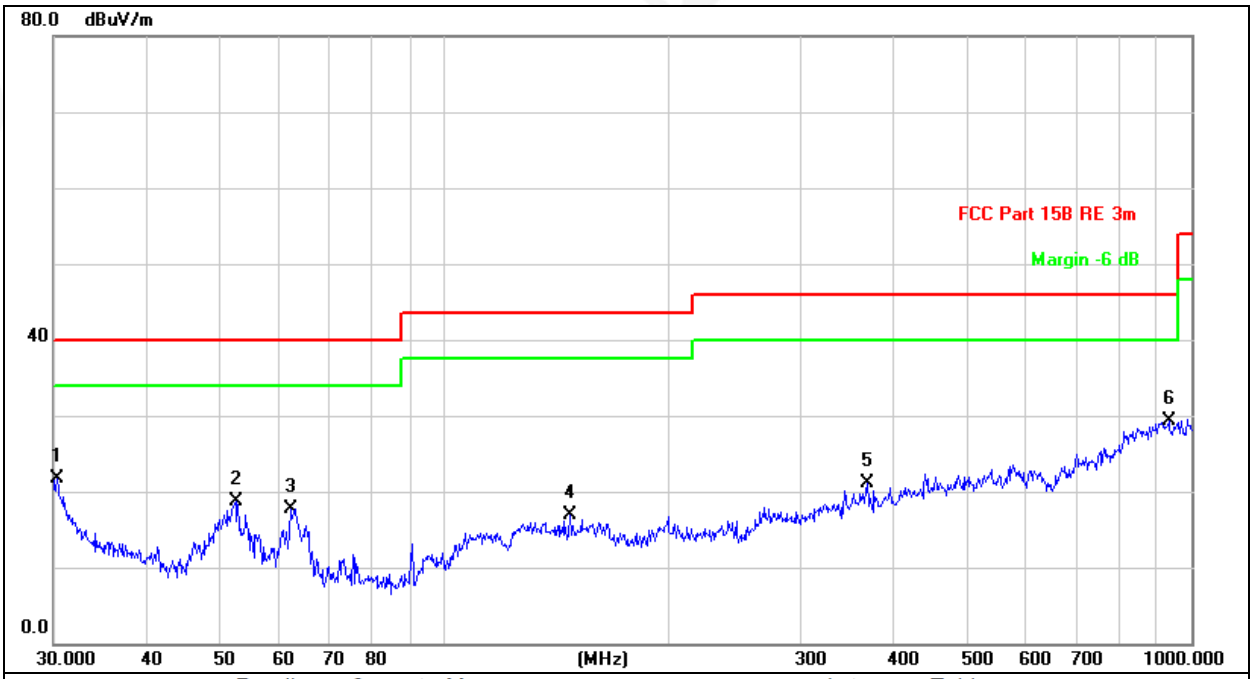

No.	Mk.	Freq.	Reading Level	Correct Factor	Measure-ment	Limit	Over		Antenna Height	Table Degree	
		MHz	dBuV	dB/m	dBuV/m	dBuV/m	dB	Detector	cm	degree	Comment
1		30.3173	20.74	1.04	21.78	40.00	-18.22	QP			
2		52.5753	35.73	-17.11	18.62	40.00	-21.38	QP			
3		62.2128	33.32	-15.57	17.75	40.00	-22.25	QP			
4		147.4036	22.65	-5.84	16.81	43.50	-26.69	QP			
5		368.1116	23.68	-2.62	21.06	46.00	-24.94	QP			
6	*	932.2715	21.70	7.61	29.31	46.00	-16.69	QP			

Remarks:
1.Final Level =Receiver Read level + Antenna Factor + Cable Loss – Preamplifier Factor
2.The emission levels of other frequencies are very lower than the limit and not show in test report.

1GHz~25GHz

Polar (H/V)	Frequency (MHz)	Meter Reading (dBuV)	Pre-amplifier (dB)	Cable Loss (dB)	Antenna Factor (dB)	Emission Level (dBuV/m)	Limits (dBuV/m)	Margin (dB)	Detector Type
Low Channel:2402MHz									
V	4807.7	57.95	30.55	5.77	24.66	57.83	74	-16.17	Pk
V	4807.7	45.58	30.55	5.77	24.66	45.46	54	-8.54	AV
V	7211.55	57.39	30.33	6.32	24.55	57.93	74	-16.07	Pk
V	7211.55	45.68	30.33	6.32	24.55	46.22	54	-7.78	AV
V	9615.4	44.16	30.85	7.45	24.69	45.45	74	-28.55	Pk
V	9615.4	46.40	30.85	7.45	24.69	47.69	54	-6.31	AV
H	4807.7	44.31	30.55	5.77	24.66	44.19	74	-29.81	Pk
H	4807.7	44.57	30.55	5.77	24.66	44.45	54	-9.55	AV
H	7211.55	44.04	30.33	6.32	24.55	44.58	74	-29.42	Pk
H	7211.55	43.99	30.33	6.32	24.55	44.53	54	-9.47	AV
H	9615.4	46.19	30.85	7.45	24.69	47.48	74	-26.52	Pk
H	9615.4	44.31	30.85	7.45	24.69	45.60	54	-8.40	AV

Polar (H/V)	Frequency (MHz)	Meter Reading (dBuV)	Pre-amplifier (dB)	Cable Loss (dB)	Antenna Factor (dB)	Emission Level (dBuV/m)	Limits (dBuV/m)	Margin (dB)	Detector Type
Middle Channel:2440MHz									
V	4883.7	52.69	30.55	5.77	24.66	52.57	74	-21.43	Pk
V	4883.7	43.47	30.55	5.77	24.66	43.35	54	-10.65	AV
V	7325.55	56.50	30.33	6.32	24.55	57.04	74	-16.96	Pk
V	7325.55	47.26	30.33	6.32	24.55	47.80	54	-6.20	AV
V	9767.4	43.95	30.85	7.45	24.69	45.24	74	-28.76	Pk
V	9767.4	44.36	30.85	7.45	24.69	45.65	54	-8.35	AV
H	4883.7	44.61	30.55	5.77	24.66	44.49	74	-29.51	Pk
H	4883.7	46.02	30.55	5.77	24.66	45.90	54	-8.10	AV
H	7325.55	44.60	30.33	6.32	24.55	45.14	74	-28.86	Pk
H	7325.55	45.47	30.33	6.32	24.55	46.01	54	-7.99	AV
H	9767.4	46.22	30.85	7.45	24.69	47.51	74	-26.49	Pk
H	9767.4	45.86	30.85	7.45	24.69	47.15	54	-6.85	AV

Polar (H/V)	Frequency (MHz)	Meter Reading (dBuV)	Pre-amplifier (dB)	Cable Loss (dB)	Antenna Factor (dB)	Emission Level (dBuV/m)	Limits (dBuV/m)	Margin (dB)	Detector Type
High Channel:2479.85MHz									
V	4959.7	57.21	30.55	5.77	24.66	57.09	74	-16.91	Pk
V	4959.7	45.16	30.55	5.77	24.66	45.04	54	-8.96	AV
V	7439.55	56.30	30.33	6.32	24.55	56.84	74	-17.16	Pk
V	7439.55	47.41	30.33	6.32	24.55	47.95	54	-6.05	AV
V	9919.4	43.83	30.85	7.45	24.69	45.12	74	-28.88	Pk
V	9919.4	43.63	30.85	7.45	24.69	44.92	54	-9.08	AV
H	4959.7	44.49	30.55	5.77	24.66	44.37	74	-29.63	Pk
H	4959.7	45.31	30.55	5.77	24.66	45.19	54	-8.81	AV
H	7439.55	45.71	30.33	6.32	24.55	46.25	74	-27.75	Pk
H	7439.55	46.02	30.33	6.32	24.55	46.56	54	-7.44	AV
H	9919.4	46.51	30.85	7.45	24.69	47.80	74	-26.20	Pk
H	9919.4	43.98	30.85	7.45	24.69	45.27	54	-8.73	AV

Remark:

1. Emission Level = Meter Reading + Antenna Factor + Cable Loss – Pre-amplifier,
   Margin= Emission Level - Limit
2. If peak below the average limit, the average emission was no test.
3. The amplitude of spurious emissions which are attenuated by more than 20dB below the permissible value has no need to be reported.

5. BANDWIDTH OF FREQUENCY BAND EDGE

5.1 TEST REQUIREMENT:

<table>
<tr><td>Test Requirement:</td><td colspan="5">FCC Part15 C Section 15.209 and 15.205</td></tr>
<tr><td>Test Method:</td><td colspan="5">ANSI C63.10: 2013</td></tr>
<tr><td>Test Frequency Range:</td><td colspan="5">All of the restrict bands were tested, only the worst band's (2310MHz to 2500MHz) data was showed.</td></tr>
<tr><td>Test site:</td><td colspan="5">Measurement Distance: 3m</td></tr>
<tr><td rowspan="3">Receiver setup:</td><td>Frequency</td><td>Detector</td><td>RBW</td><td>VBW</td><td>Value</td></tr>
<tr><td rowspan="2">Above 1GHz</td><td>Peak</td><td>1MHz</td><td>3MHz</td><td>Peak</td></tr>
<tr><td>Average</td><td>1MHz</td><td>3MHz</td><td>Average</td></tr>
</table>

Emissions radiated outside of the specified frequency bands, except for harmonics, shall be attenuated by at least 50 dB below the level of the fundamental or to the general radiated emission limits in § 15.209, whichever is the lesser attenuation

5.2 TEST PROCEDURE

Above 1GHz test procedure as below:

a. 1. The EUT was placed on the top of a rotating table 1.5 meters above the ground at a 3 meter camber. The table was rotated 360 degrees to determine the position of the highest radiation.
b. The EUT was set 3 meters away from the interference-receiving antenna, which was mounted on the top of a variable-height antenna tower.
c. The antenna height is varied from one meter to four meters above the ground to determine the maximum value of the field strength. Both horizontal and vertical polarizations of the antenna are set to make the measurement.
d. For each suspected emission, the EUT was arranged to its worst case and then the antenna was tuned to heights from 1 meter to 4 meters and the rota table was turned from 0 degrees to 360 degrees to find the maximum reading.
e. The test-receiver system was set to Peak Detect Function and Specified Bandwidth with Maximum Hold Mode.
f. If the emission level of the EUT in peak mode was 10dB lower than the limit specified, then testing could be stopped and the peak values of the EUT would be reported. Otherwise the emissions that did not have 10dB margin would be re-tested one by one using peak, quasi-peak or average method as specified and then reported in a data sheet.
g. Test the EUT in the lowest channel,the Highest channel

Note:

Both horizontal and vertical antenna polarities were tested
and performed pretest to three orthogonal axis. The worst case emissions were reported

5.3 DEVIATION FROM TEST STANDARD

No deviation

5.4 TEST SETUP

Radiated Emission Test-Up Frequency Above 1GHz

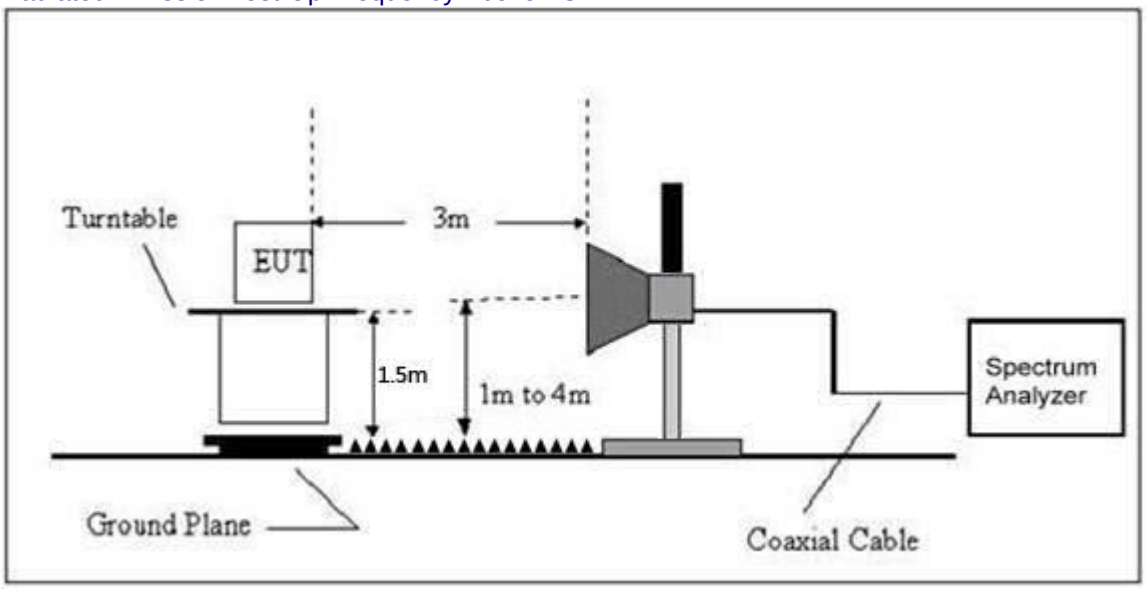

5.5 EUT OPERATING CONDITIONS

The EUT tested system was configured as the statements of 2.3 Unless otherwise a special operating condition is specified in the follows during the testing.

5.6 TEST RESULT

	Polar (H/V)	Frequency (MHz)	Meter Reading (dBuV)	Pre-amplifier (dB)	Cable Loss (dB)	Antenna Factor (dB/m)	Emission level (dBuV/m)	Limit (dBuV/m)	Detector Type	Result
GFSK	Low Channel: 2402MHz									
	H	2390.00	51.96	30.22	4.85	23.98	50.57	74.00	PK	PASS
	H	2390.00	43.25	30.22	4.85	23.98	41.86	54.00	AV	PASS
	H	2400.00	56.10	30.22	4.85	23.98	54.71	74.00	PK	PASS
	H	2400.00	46.85	30.22	4.85	23.98	45.46	54.00	AV	PASS
	V	2390.00	54.05	30.22	4.85	23.98	52.66	74.00	PK	PASS
	V	2390.00	43.18	30.22	4.85	23.98	41.79	54.00	AV	PASS
	V	2400.00	57.37	30.22	4.85	23.98	55.98	74.00	PK	PASS
	V	2400.00	47.51	30.22	4.85	23.98	46.12	54.00	AV	PASS
	High Channel: 2480MHz									
	H	2483.50	55.38	30.22	4.85	23.98	53.99	74.00	PK	PASS
	H	2485.50	42.97	30.22	4.85	23.98	41.58	54.00	AV	PASS
	H	2483.50	57.12	30.22	4.85	23.98	55.73	74.00	PK	PASS
	H	2485.50	46.67	30.22	4.85	23.98	45.28	54.00	AV	PASS
	V	2483.50	53.92	30.22	4.85	23.98	52.53	74.00	PK	PASS
	V	2485.50	45.11	30.22	4.85	23.98	43.72	54.00	AV	PASS
	V	2483.50	54.97	30.22	4.85	23.98	53.58	74.00	PK	PASS
	V	2485.50	44.93	30.22	4.85	23.98	43.54	54.00	AV	PASS

Remark:
1. Emission Level = Meter Reading + Antenna Factor + Cable Loss – Pre-amplifier, Margin= Emission Level - Limit

6. CHANNEL BANDWIDTH

Test Requirement:	FCC Part15 C Section 15.215 (c)
Test Method:	ANSI C63.10: 2013

6.1 APPLIED PROCEDURES / LIMIT

Section	Test Item	Frequency Range (MHz)	Result
15.215 (c)	Bandwidth	2400-2483.5	PASS

6.2 TEST PROCEDURE

1. Set resolution bandwidth (RBW) = 30 kHz.
2. Set the video bandwidth (VBW) ≥ 3 x RBW.
3. Detector = Peak.
4. Trace mode = max hold.
5. Sweep = auto couple.
6. Allow the trace to stabilize.
7. Measure the maximum width of the emission that is constrained by the frequencies associated with the two outermost amplitude points (upper and lower) that are attenuated by 6 dB relative to the maximum level measured in the fundamental emission.

6.3 DEVIATION FROM STANDARD

No deviation.

6.4 TEST SETUP

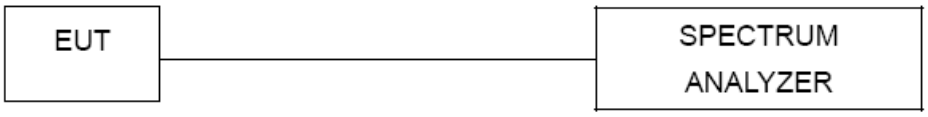

6.5 EUT OPERATION CONDITIONS

The EUT tested system was configured as the statements of 2.4 Unless otherwise a special operating condition is specified in the follows during the testing.

6.6 TEST RESULTS

Temperature：	26℃	Relative Humidity：	54%
Test Mode ：	GFSK	Test Voltage ：	DC 1.5V

Test channel	99% Channel Bandwidth (MHz)	20dB Channel Bandwidth (MHz)	Result
Lowest	1.9871	2.010	Pass
Middle	1.9593	2.042	
Highest	1.9551	2.023	

CH 01

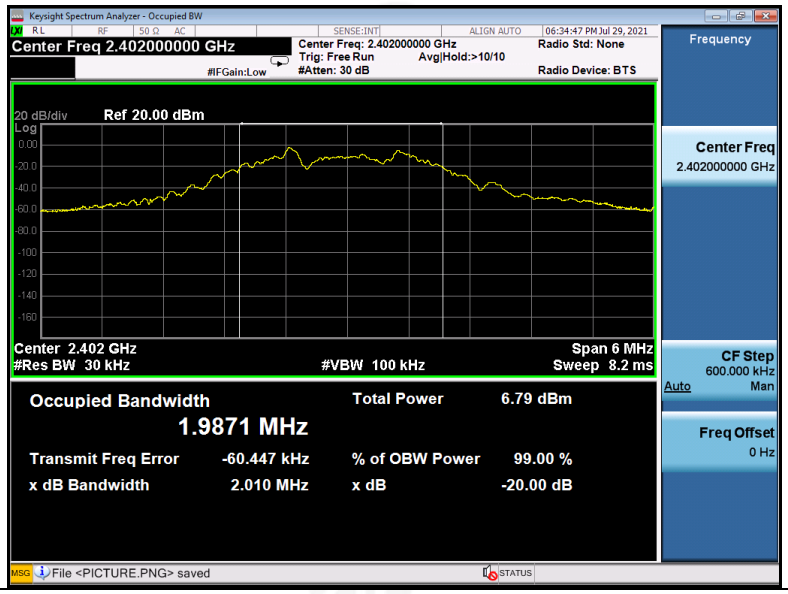

CH20

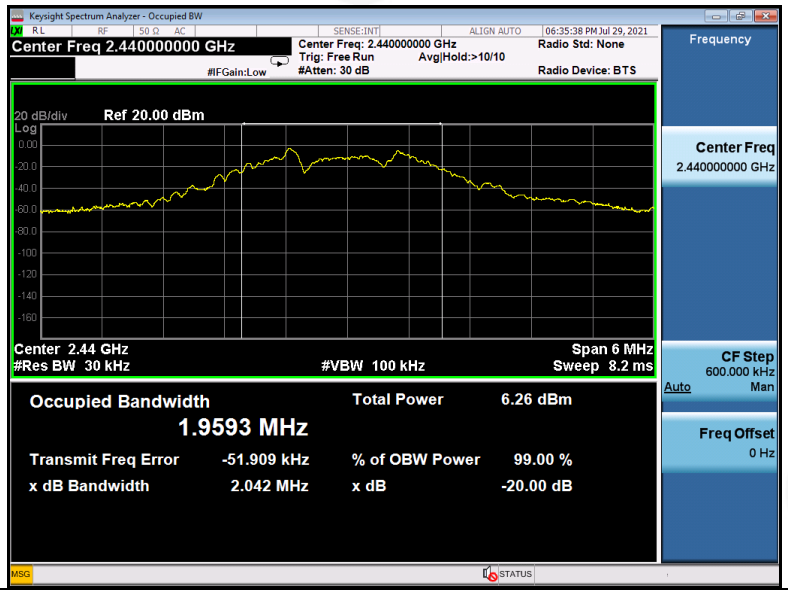

CH40

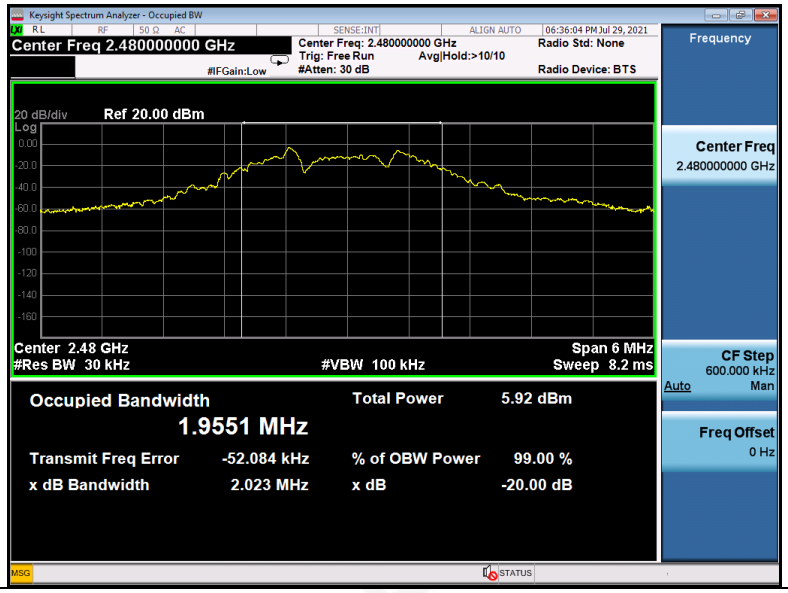
Keysight Spectrum Analyzer - Occupied BW
Center Freq 2.480000000 GHz
Center Freq: 2.480000000 GHz
Trig: Free Run
Avg|Hold:>10/10
#Atten: 30 dB
Radio Std: None
Radio Device: BTS
06:36:04 PM Jul 29, 2021
#IFGain:Low
20 dB/div
Ref 20.00 dBm
Center 2.48 GHz
#Res BW 30 kHz
#VBW 100 kHz
Span 6 MHz
Sweep 8.2 ms
Occupied Bandwidth
1.9551 MHz
Total Power 5.92 dBm
Transmit Freq Error -52.084 kHz
% of OBW Power 99.00 %
x dB Bandwidth 2.023 MHz
x dB -20.00 dB
Frequency
Center Freq
2.480000000 GHz
CF Step
600.000 kHz
Auto Man
Freq Offset
0 Hz
MSG
STATUS

7. ANTENNA REQUIREMENT

Standard requirement:	FCC Part15 C Section 15.203
15.203 requirement: An intentional radiator shall be designed to ensure that no antenna other than that furnished by the responsible party shall be used with the device. The use of a permanently attached antenna or of an antenna that uses a unique coupling to the intentional radiator, the manufacturer may design the unit so that a broken antenna can be replaced by the user, but the use of a standard antenna jack or electrical connector is prohibited.	
EUT Antenna:	
The antenna is PCB antenna, the best case gain of the antennas is 1.8dBi, reference to the appendix II for details	

8. TEST SETUP PHOTO

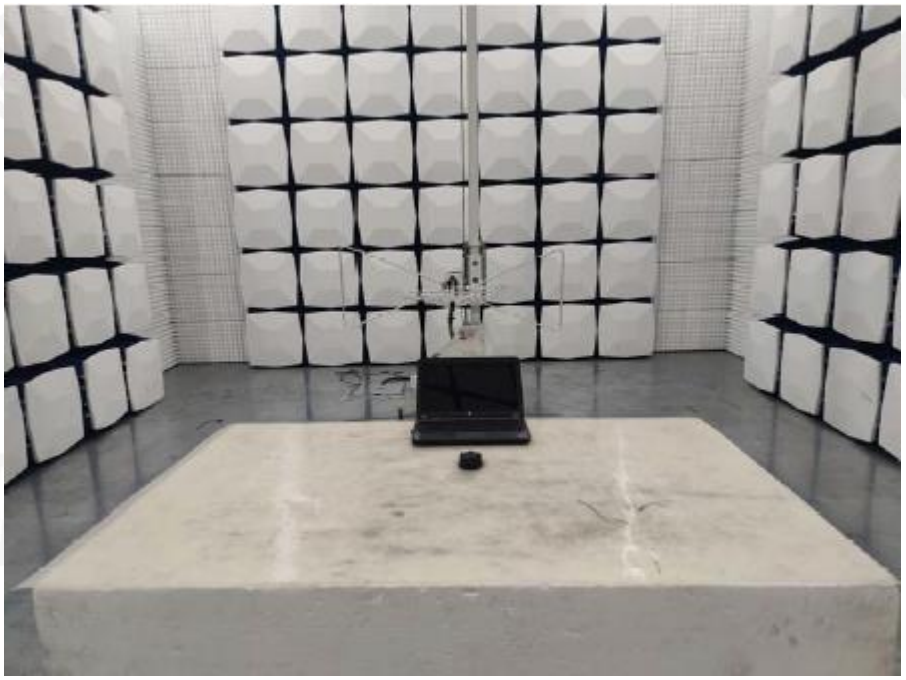

9. EUT CONSTRUCTIONAL DETAILS

Please refer to external photos file and internal photos file

※※※※※ END OF REPORT ※※※※※