chillaxbaby

Developed by 5GEN CARE™

USER'S GUIDE

MODELS: GIRAFFE PRO MAX

DM685PU,DM685BU,

Welcome...

to your new Chillax Wi-Fi® Video Baby Monitor !

Thank you for purchasing the Wi-Fi® Video Baby Monitor. Now you can see and hear your baby sleeping. Our Connected Baby Monitor let you see your baby from the hand-held viewer, or from your smartphone. Watch over and communicate with your baby from anywhere in the world.

Please keep your original dated sales receipt for your records. For warranty service of your Chillax product, you will need to provide a copy of your dated sales receipt to confirm warranty status. Registration is not required for warranty coverage.

For questions, warranty, support or service related to the product, please contact us by:

Email: support@chillaxcare.com
Or, visit us at http://chillaxcare.com

This User's Guide has all the information you need to make the most out of your product. Please read the Safety Instructions on pages 8-9 before you install the unit.

Inside the Box

- 1 x Parent Unit
- 1 x Baby Unit (Camera)
- 1 x Multi-Purpose Stand
- 2 x USB charger (Parent Unit and Baby Unit)
- 2 x USB-A/USB-C power cables (Parent Unit and Baby Unit)
- 1 x User Guide

In multi-camera packs, you will find one or more additional Camera Units with USB chargers and power cables.

Overview of Parent Unit

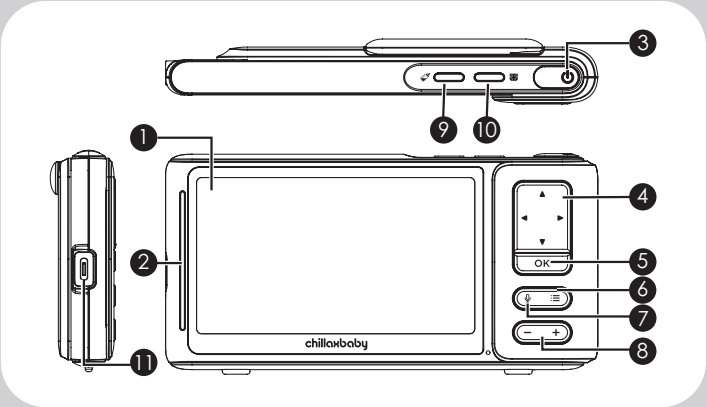

1. **Display (LCD screen)**
2. **Audio Level LEDs (Green, Amber, Red, Red)**
3. **Parent Unit ON/OFF ⏻**
   Short press to switch on when unit is off.
   Long press to switch off when unit is on.
   Short press to turn LCD screen Off when unit is on.
4. **Navigation buttons ▲ ▼ ◄ ►**
   Move Up/Down/Right/Left menu options.
5. **OK button**
6. **MENU ☰ button**
   Press to open / close the Menu options.
7. **2-Way Talk button**
   Press and hold to speak to your baby.
8. **Volume +/-**
   Adjust the speaker volume level by pressing + or - buttons.
9. **Feeding log button**
   Press and hold to record one feeding event.
10. **Diaper change log button**
    Press and hold to record one diaper change event.
11. **USB-C power socket**

Parent unit menu icons

	Signal Level (5 Levels).
	Night Vision Mode (Video also changes to Black/White).
	Talk Mode On.
	Indicates the screen off timer is set. (not applicable when the unit is AC powered). Set Screen Off Timer (Off, 5 mins, 15 mins, 30 mins, 60 mins).
	Volume Level Control (8 Levels).
	No Baby Unit detected.
	Battery Level Indication (4 Levels).
	Zoom Level Control (1X, 2X, 3X).
	LCD Brightness Level Control (8 Levels).
	Alarm Setting (30mins to 6hrs with step of 30-min, OFF) On status bar, indicates alarm set, and when flashing, that alarm time has been reached or missed.
	Temperature scales select (°C/°F) Readings display in BLUE, but turn RED if > 29 °C / 84 °F or <14 °C / 57 °F. Displays LL °C / °F if < 1 °C / 34 °F. Displays HH °C / °F if >36 °C / 97 °F.
	Camera Control (scan , view , add , del).
	Select to playback personal recording (record via Chillax app) Select to playback preloaded lullaby. Press **OK** to playback or stop the selected lullaby.
	View multiple cameras on screen. Available when you have more than 1 Baby Unit (Camera).

Overview of Baby Unit

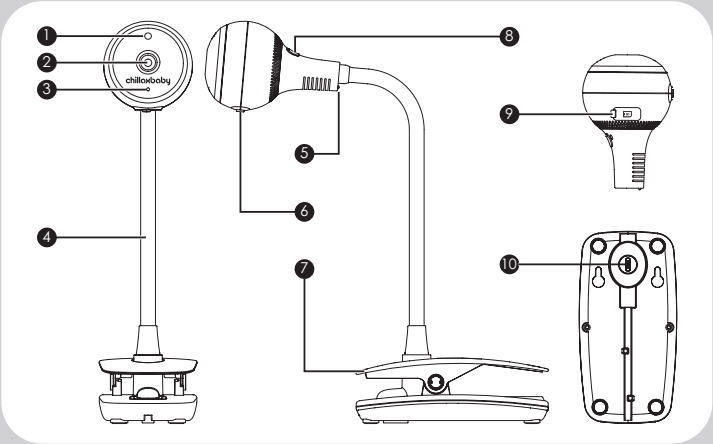

1. **Light Sensor**
2. **Camera Lens**
3. **Microphone**
4. **Gooseneck**
5. **Room Temperature Sensor**
6. **Wi-Fi On/Off Knob**
   Slide to switch On/Off the Wi-Fi connection.
7. **Multi-purpose Stand**
8. **PAIR Button**
9. **Micro-SD Card Slot**
   Support micro-SD card up to 32GB memory.
10. **USB-C Power Socket**

Important guidelines for installing your Digital Video Baby Monitor

- To use your Baby Unit and Parent Unit together, you must be able to establish a radio link between them, and the range will be affected by environmental conditions.
- Any large metal object, like a refrigerator, a mirror, a filing cabinet, a metallic door or reinforced concrete, between the Baby Unit and Parent Unit may block the radio signal.
- The signal strength may also be reduced by other solid structures, like walls, or by radio or electrical equipment, such as TVs, computers, cordless or mobile phones, fluorescent lights or dimmer switches.
- Other 2.4GHz products, such as wireless networks (Wi-Fi® routers), Bluetooth™ systems, microwave ovens or other Baby Monitors, may cause interference with this product, so keep the Baby Monitor at least 5ft (1.5m) away from these types of products, or switch them off if they appear to be causing interference.
- If the signal is weak, try moving the Parent and/or the Baby Unit to different positions in the rooms.

chillaxbaby

Table of contents

1. Safety Instructions 8
2. Getting Started 10
   - 2.1 Connecting the Power Supply for the Baby Unit 10
   - 2.2 Multi-Purpose Stand 11
   - 2.3 Connecting the Power Supply of the Parent Unit 13
   - 2.4 Desktop Stand of the Parent Unit 14
   - 2.5 Registration (Pairing) 14
3. Using the Baby Monitor 15
   - 3.1 SD Card Installation 15
   - 3.2 Setting Up 15
   - 3.3 Night Vision Mode 15
   - 3.4 Privacy Protection (Wi-Fi On/Off) 15
   - 3.5 2-Way Talk Mode 15
   - 3.6 Video ON/OFF 16
   - 3.7 Volume Control 16
   - 3.8 Feeding Event Log 16
   - 3.9 Diaper Change Event Log 16
   - 3.10 Temperature Display (HH °C / °F or LL °C / °F) 16
4. Parent Unit Menu Options 17
   - 4.1 Alarm 17
   - 4.2 Camera Control 17
     - 4.2.1 Add (pair) a Camera 17
     - 4.2.2 View a Camera 18
     - 4.2.3 Delete a Camera 18
     - 4.2.4 Scan Camera 18
   - 4.3 Temperature Unit 19
   - 4.4 Video on Timer 19
   - 4.5 View Multiple Cameras on Screen 19

5. Wi-Fi® Internet Viewing 20
5.1 Minimum System Requirements 20
5.2 Getting Started - Connecting Devices 20
5.3 Setup 21
5.4 User Account and Camera Setup on Android™ Devices or iPhone®/iPad® 21
5.4.1 Power ON and Connect the Camera 21
5.4.2 Download ChillaxCare App 21
5.4.3 Sign Up with ChillaxCare on Your Smart Device 22
5.4.4 Add the Camera to your account 23
6. Disposal of the Device (environment) 25
7. Cleaning 25
8. Help 26
9. Troubleshooting for Wi-Fi® Internet Viewing 28
10. Standard Warranty 33
11. Technical Specifications 37

1. *Safety Instructions*

⚠ WARNING:

Strangulation Hazard: Children have STRANGLED in cords. Keep this cord out of the reach of children (more than 3ft (1m) away). Never use extension cords with AC Adapters. Only use the Adapter provided.

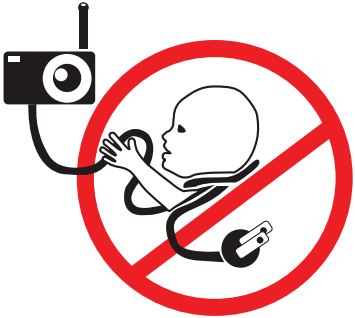

Wi-Fi® CAMERA UNIT SET UP & USE:

- **Choose a location for the Baby Unit that will provide the best view of your baby in his/her crib.**
- **Place the Baby Unit on a flat surface, such as a dresser, bureau or shelf, or mount the Baby Unit on a wall securely using the keyhole slots in the underside of the stand.**

WARNING

This Baby Monitor is compliant with all relevant standards regarding electromagnetic fields and is, when handled as described in the User's Guide, safe to use. Therefore, always read the instructions in this User's Guide carefully before using the device.

- Adult assembly is required. Keep small parts away from children when assembling.
- This product is not a toy. Do not allow children to play with it.
- This Baby Monitor is not a substitute for responsible adult supervision.
- Keep this User's Guide for future reference.
- Keep the cords out of reach of children.
- Do not cover the Baby Monitor with a towel or blanket.
- Test this monitor and all its functions so that you are familiar with it prior to actual use.
- Do not use the Baby Monitor in damp areas or close to water.
- Do not install the Baby Monitor in extreme cold or heat, direct sunlight, or close to a heat source.
- Only use the chargers and power adapters provided. Do not use other chargers or power adapters as this may damage the device and battery pack.
- Do not touch the plug contacts with sharp or metal objects.
- Connect the power adapters to easily accessible electrical sockets.

CAUTION

There is a risk of explosion if the battery is replaced by an incorrect type. Dispose of used batteries according to their instructions.

Use only the rechargeable battery pack with rating: 3.8V 3000mAh.

2. *Getting Started*

2.1 Connecting the Power Supply for the Baby Unit

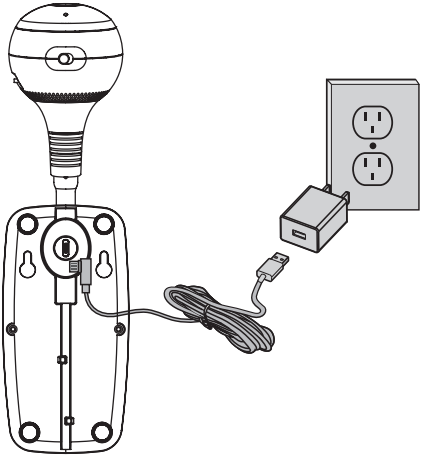

- Insert the USB-A (bigger end) plug of the USB cable into the USB charger then insert the USB-C (smaller end) into the USB-C socket at the bottom of the base clip.
- Connect the USB charger to electrical outlet.
- The baby unit turns on and the power indicator lights in blue color.

NOTE

Only use the supplied USB charger (DC5V/1500mA).

2.2 Multi-Purpose Stand

The unit comes with a stand which gives 3 mounting postures for optimal viewing. it is desktop, wall and clip mountable. You need to probably manage the power adaptor cord and camera head orientation according to the mounting posture.

Desktop mount

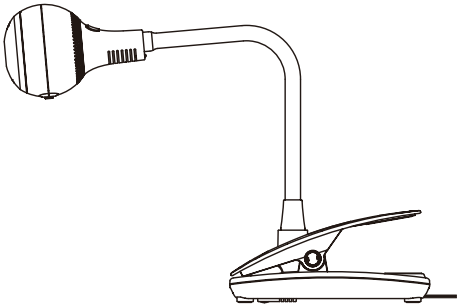

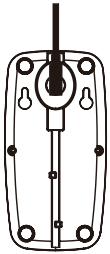

Cord management under the base

Wall mount

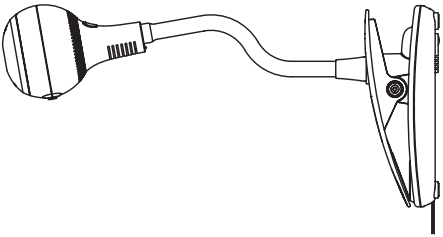

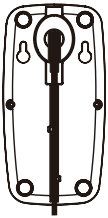

Cord management under the base

Clip mount

The feature allows mounting the camera on fixture like bookshelf, wall shelf or crib end. The max allowable clipping thickness is 1/4" (or 25mm).

Secure the cord to your wall or fixture using the cable management clips (not included), to keep the cord away from kid's or baby's reach.

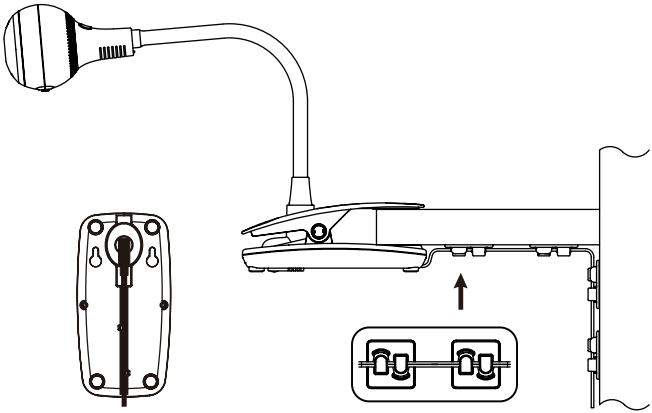

Cord management under the base

Recommended double adhesive cord management clip (not included)

2.3 Connecting the Power Supply of the Parent Unit

A rechargeable battery (Lithium-ion battery 3000mAh) inside the Parent Unit allows you to move it without losing the link and picture from the Baby Unit. The battery provides up to 10 hours standby of the Parent Unit. We recommend charging for at least 16 hours before first use, and when the Parent Unit indicates the battery is low.

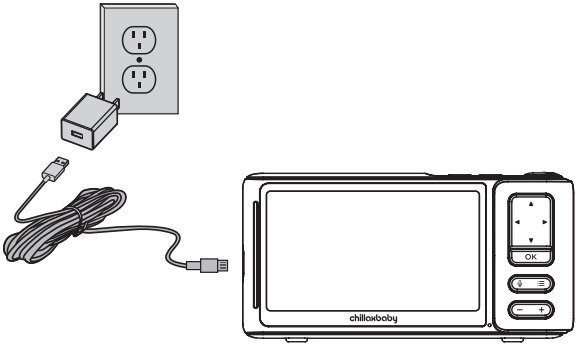

- Insert the USB-A (bigger end) plug of the USB cable into the USB charger then insert the USB-C (smaller end) into the USB-C socket at the side of the Parent Unit.
- Connect the USB-charger to the electrical outlet. Use only the enclosed USB charger (5VDC/1500mA).
- Press the ⏻ button to turn the Parent unit on, the Parent unit and Baby unit are automatically linked and ready to use.

NOTE

When the Baby and Parent Units are both turned on and within range, the Parent Unit should show a color image from the Baby Unit camera, but if the room is dark, the image will be in black and white, with an icon showing, due to the infra-red illumination by the Baby Unit.

2.4 Desktop Stand of the Parent Unit

- The parent unit comes with a desktop stand attached to the back of the parent unit.
- To place the parent unit on a desk, simply pull out the stand, as shown.

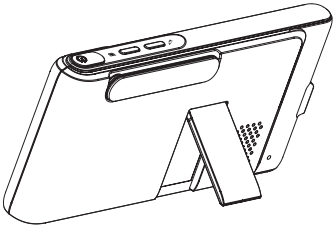

NOTE

Place the parent unit on a flat, even surface.

2.5 Registration (Pairing)

The Baby Monitor is pre-registered to your Parent Unit. You do not need to register it again unless the Baby Unit loses its link with the Parent Unit.

To re-register your Baby Unit, or register a new Baby Unit, follow the procedures below:

- Press the ☰ button and the menu bar will pop up.
- Press the ◄ LEFT / ► RIGHT buttons until ⊕ is highlighted, and the scan ⟲, view, add ⊕, del ⊖ menus will pop up.
- Press the ◄ LEFT / ► RIGHT buttons to select ⊕ and press the **OK** button to confirm.
- Camera 1 2 3 4 will pop up.
- Press the ◄ LEFT / ► RIGHT button to select the desired Camera and press the **OK** button to start searching for a camera unit.

  Note: *If a camera is currently paired with the Parent Unit, its camera location (with a * against it) cannot be selected for a new registration.*
- Press and hold the **PAIR** button on the underside of the Baby Unit until the Parent Unit finds the camera, beeps and **PAIR OK** appears on the screen. The video from the camera will then appear.

NOTE

A camera can only be registered to one Parent Unit at any one time.

3. *Using the Baby Monitor*

3.1 SD Card Installation

As an option, the Unit provides video recording on up to 32GB microSD card (NOT PROVIDED) when image motion is detected. Insert the microSD card into the SD slot as shown.

3.2 Setting Up

Place the Baby Unit in a convenient location (e.g., on a table) and point the camera lens towards the area you want to monitor.

Adjust the angle of the Baby Unit's camera until you are satisfied with the image shown on the Parent Unit.

NOTE

Do not place the Baby Unit within the baby's reach! If there is interference with the picture or sound, try moving the units to different locations, and ensure they are not close to other electrical equipment.

3.3 Night Vision Mode

The Baby Unit has 8 high-intensity infrared LEDs for picking up clear images in the dark. When the built-in photo sensor on the top of the Unit detects a low level of ambient light, the LEDs will automatically activate and the screen on the Parent Unit will display in black and white. The icon will be displayed at the top of the screen.

3.4 Privacy Protection (Wi-Fi On/Off)

To enable privacy protection mode, slide the knob to position such that the device will be disconnected from the Wi-Fi® network.

To disable the privacy protection mode, slide the knob to the position to restore the Wi-Fi® network connection.

Note: *The privacy protection (Wi-Fi On) setting is disabled by default.*

3.5 2-Way Talk Mode

Press and hold the **2-Way Talk** button on the Parent Unit to talk to your baby through the Baby Unit's loudspeaker.

The icon will be displayed at the top of the LCD screen.

Release the button to stop the talk back.

3.6 Video ON/OFF

Press ⏻ button once to turn the LCD screen on or off at standby mode, whilst still leaving the audio monitor on.

3.7 Volume Control

Press the Volume buttons + or - to adjust the parent unit volume level. The icon will pop up and you can select the desired volume from level 0~8.

(The default volume level setting is level 4, and level 0 is OFF.)

3.8 Feeding Event Log

Press and hold on the button to log one feeding event before you are free to edit the detail. You then enter the mobile app – Chillax Care to input the feeding detail, such as fed by breast feeding, bottle feeding or solid food, the baby in-take quantity or duration.

3.9 Diaper Change Event Log

Press and hold on the button to log one diaper change event before you are free to edit the detail. You then enter the mobile app – Chillax Care to input the diaper change detail, such as change due to pee, poo or mixed, then follow the App instruction to detail the information.

3.10 Temperature Display (HH °C / °F or LL °C / °F)

The temperature reading from the temperature sensor at the back of the Baby Unit will be displayed at the top of the LCD screen. The readings will turn RED if the temperature goes above 29°C / 84°F or below 14°C / 57°F. The reading will change to HH °C / °F if the temperature goes above 36°C / 97°F. The reading will change to LL °C / °F if the temperature goes below 1°C / 34°F.

4. Parent Unit Menu Options

4.1 Alarm

- Press the ☰ button and the menu bar will pop up.
- Press the ◄ LEFT / ► RIGHT buttons until ⏰ is highlighted.
- Press the ◄ LEFT / ► RIGHT buttons to select the alarm time (30mins to 6hrs with step of 30-min). (The default setting is Alarm OFF.)

NOTE

If an alarm time is selected, the Parent Unit will beep for about 60 seconds after every setting.

4.2 Camera Control

4.2.1 Add (pair) a Camera

- Press the ☰ button and the menu bar will pop up.
- Press the ◄ LEFT / ► RIGHT buttons until ⊕ is highlighted, and the scan ⟲, view 👁, add ⊕, del ⊖ menus will pop up.
- Press the ◄ LEFT / ► RIGHT buttons to select ⊕ and press the **OK** button to confirm.
- Camera 1 2 3 4 will pop up. Press the ◄ LEFT / ► RIGHT buttons to select the open camera number (without * marked) and press the **OK** button to start searching for a camera unit.
- Press and hold the **PAIR** button on the underside of the Baby Unit until the Parent Unit finds the camera, beeps and **PAIR OK** appears on the screen. The video from the new added camera will then appear.

NOTE

A camera can only be registered to one Parent Unit at any one time.

4.2.2 View a Camera

- Press the ☰ button and the menu bar will pop up.
- Press the ◄ LEFT / ► RIGHT buttons until ⊕ is highlighted, and the scan ⟲, view ◎, add ⊕, del ⊖ menus will pop up.
- Press the ◄ LEFT / ► RIGHT buttons to select ◎ and press the **OK** button to confirm.
- Camera ◎1 ◎2 ◎3 ◎4 will pop up. Press the ◄ LEFT / ► RIGHT buttons to select the desired Camera and press the **OK** button to view the picture from that camera.

TIP

You can also press the **OK** *button repeatedly to view feed from available cameras.*

4.2.3 Delete a Camera

- Press the ☰ button and the menu bar will pop up.
- Press the ◄ LEFT / ► RIGHT buttons until ⊕ is highlighted, and the scan ⟲, view ◎, add ⊕, del ⊖ menus will pop up.
- Press the ◄ LEFT / ► RIGHT buttons to select ⊖ and press the **OK** button to confirm.
- Camera ◎1 ◎2 ◎3 ◎4 will pop up, press the ◄ LEFT / ► RIGHT buttons to select the desired Camera and press the **OK** button.

NOTE

You are not allowed to delete the camera if there is only one registered camera in the system.

4.2.4 Scan Camera

This function is only available when you have more than 1 Baby Unit (Camera).

- Press the ☰ button and the menu bar will pop up.
- Press the ◄ LEFT / ► RIGHT buttons until ⊕ is highlighted, and the scan ⟲, view ◎, add ⊕, del ⊖ menus will pop up.
- Press the ◄ LEFT / ► RIGHT buttons to select ⟲ and press the **OK** button to confirm.

- The screen will then display images from different registered cameras sequentially in loop, changing about every 12 seconds.

TIP

You can also press the **OK** *button repeatedly to select available camera video feed or enter scan mode.*

4.3 Temperature Unit

- Press the ☰ button and the menu bar will pop up.
- Press the ◀ LEFT / ▶ RIGHT buttons until 🌡 is highlighted.
- Press **OK**, then ◀ LEFT / ▶ RIGHT buttons to select °C or °F.

4.4 Video on Timer

- Press the ☰ button and the menu bar will pop up.
- Press the ◀ LEFT / ▶ RIGHT buttons until is highlighted.
- Press the ◀ LEFT / ▶ RIGHT buttons to select auto video off after 5 mins, 15 mins, 30 mins or 60 mins (if operating on batteries only).

NOTE

The audio will remain, and you can press any key to switch the video back on.

4.5 View Multiple Cameras on Screen

This function is only available when you have more than 1 Baby Unit (Camera). When the Multiple View function is On, you can view multiple cameras on the screen.

- Press the ☰ button and the menu bar will pop up.
- Press the ◀ LEFT / ▶ RIGHT buttons until is highlighted.
- Press the ◀ LEFT / ▶ RIGHT buttons to select No ✕ and Yes ✓.
- When the function is activated, you can press the ◀ LEFT / ▶ RIGHT / ▲ UP / ▼ DOWN button to switch between cameras to hear the audio from the selected camera.

5. Wi-Fi® Internet Viewing

5.1 Minimum System Requirements

Web Portal

- Android™ System, Version 7.0 or above
- iPhone®/iPad® iOS, Version 10.0 or above
- High Speed (Wi-Fi®) Internet

At least 0.6 Mbps upload bandwidth per camera (you can test your internet speed here: http://www.speedtest.net)

5.2 Getting Started - Connecting Devices

How does it work?

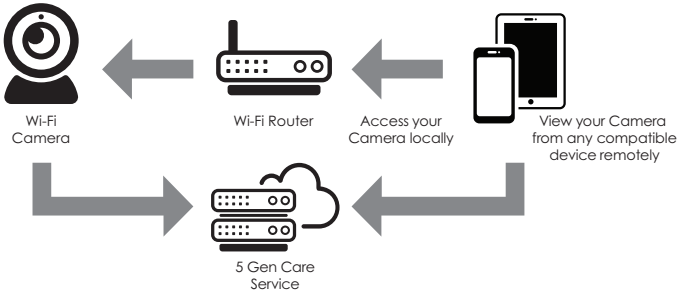

When a user tries to access the Camera, our 5GenCare server authenticates the user's identity and permits access to the Camera.

5.3 Setup

Connect the Wi-Fi® Camera to the Power Adapter, then plug into mains power. The Camera must be within range of the Wi-Fi® router with which you want to connect. Make sure the password of the router is available for entering during the in-app setup process.

Status of LED Indication:

- Pair / Setup state: LED is Blue and Flashing.
- Unconnected state: LED is Red and Flashing.
- Connected state: LED is Blue and always on.
- Video streaming: LED is Blue and Flashing.

Note: *You can only setup via a compatible smartphone or tablet and not via a PC.*

5.4 User Account and Camera Setup on Android™ Devices or iPhone®/iPad®

What you need

- Wi-Fi® Camera Unit
- Power adapter for the Camera
- Device with Android™ system version 7.0 and above
- Or iPhone®/iPad® with iOS version 10.0 and above

5.4.1 Power ON and Connect the Camera

- Switch the parent unit off before connect the camera to Wi-Fi®.
- Connect the power adapter to mains power and insert the plug into the power socket on the back of the Camera Unit, the unit turns on.

5.4.2 Download ChillaxCare App

Download on the App Store

GET IT ON Google Play

- Scan the QR code with your smart device and download ChillaxCare App from the App Store for iOS devices or from the Google Play™ Store for Android™ devices.
- Install ChillaxCare App on your device.

5.4.3 Sign Up with ChillaxCare on Your Smart Device

- Ensure that your smart device is connected to your Wi-Fi® router.
- Run Chillax Care App, tap **Create New Account** (fig. 1)
- Enter your access code emailed to you to sign up with Chillax Care. (fig. 2)

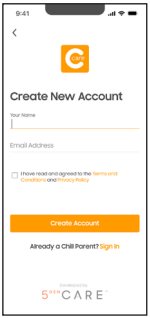

fig. 1

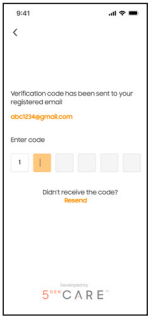

fig. 2

NOTE

If you already have a ChillaxCare App account, please tap Log in to go to the next steps.

5.4.4 Add the Camera to your account

- Tap DM685 to add the new camera (fig. 3).

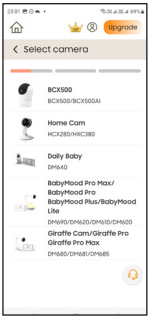

fig. 3

- The following setup instructions will appear on the screen, select your Wi-Fi network and enter "Password" (fig. 4).
- Power on your camera and wait for the RED LED flashing on the camera (fig. 5).

fig. 4

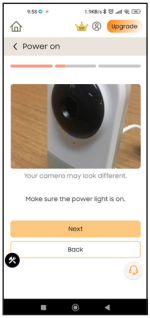

fig. 5

- Locate the pair button on the camera, press and hold the Pair button until you hear "**Ready for Pairing**" (fig.6).
- Follow the instruction and generate a QR code (fig.7).

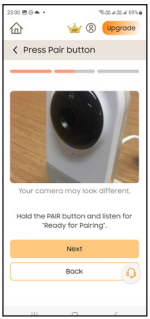

fig. 6

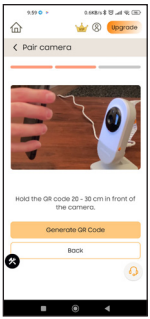

fig. 7

- Hold in **20-30 cm** in front of the camera to get it scanned (fig. 8). It will take a few minutes for the Camera to connect to the Wi-Fi® network.

fig. 8

NOTE

If connection fails, please tap Retry and repeat the steps starting from Step 1.

6. Disposal of the Device (environment)

At the end of the product life cycle, you should not dispose of this product with normal household waste. Take this product to a collection point for the recycling of electrical and electronic equipment. The symbol on the product, user's guide and/or box indicates this.

Some of the product materials can be re-used if you take them to a recycling point. By reusing some parts or raw materials from used products you make an important contribution to the protection of the environment.

Please contact your local authorities in case you need more information on the collection points in your area.

The internal battery should be disposed of with the Parent unit in an environmentally friendly manner according to your local regulations.

7. Cleaning

Clean the Baby Monitor with a slightly damp cloth or with an anti- static cloth. Never use cleaning agents or abrasive solvents.

Cleaning and Care

- Do not clean any part of the product with thinners or other solvents and chemicals – this may cause permanent damage to the product which is not covered by the warranty.
- Keep the Camera away from hot, humid areas or strong sunlight, and do not let it get wet.
- Every effort has been made to ensure high standards of reliability for your Baby Monitor. However, if something does go wrong, please do not try to repair it yourself – contact Customer Service for assistance.

IMPORTANT

Always switch off and disconnect the power adapter before cleaning your baby monitor.

8. Help

Display

No display

- Try recharging the battery pack.
- Reset the Units. Unplug both the Units' electrical power, then plug them back in.
- Is the Unit switched on?
- Press and hold the ON/OFF button ⏻ on the Parent Unit for 3 seconds to switch it ON.
- Is the correct camera selected? Change the camera number, if necessary.
- Is the video display turned on? Press the once the ON/OFF button ⏻ to turn it ON.
- When operating using batteries only, the display will go blank after 5 minutes, 15 minutes, 30 minutes or 60 minutes to save power (depending on video settings). The Unit is still active and will give you audio alerts. You can reactivate the screen by pressing any button.

Registration

If the Baby Unit has lost its link with the Parent Unit

- If the Baby Unit is too far away it may be going out of range, so move the Baby Unit closer to the Parent Unit.
- Reset both the Parent Unit and Baby Unit by disconnecting them from the electrical power. Wait about 15 seconds before reconnecting. Allow up to one minute for the Baby Unit and the Parent Unit to synchronize.
- See 2.3 Registration (Pairing), if there is a need to re-register the units.

Interference

Noise interference on your Parent Unit

- Your Baby and Parent Units may be too close. Move them further apart.
- Make sure there is at least 1 to 2m between the 2 Units to avoid audio feedback.
- If the Baby Unit is too far away; it may be out of range. Move the Baby Unit closer to the Parent Unit.

- Make sure that the Baby and Parent Units are not near other electrical equipment, such as a television, computer or cordless/ mobile telephone. Move the Baby Unit or Parent Unit 1.5 meter away from other electrical equipment.
- Use of other 2.4 GHz products, such as wireless networks (Wi-Fi® routers), Bluetooth™ systems, or microwave ovens, may cause interference with this product. Keep the Baby Unit or Parent Unit at least 1.5 meter away from these types of products, or switch them off if they appear to be causing interference.
- If the signal is weak, try moving the Parent and/or Baby Unit to different positions in the rooms.

Noise interference on your device

- To avoid background noise or echoes, ensure that there is enough distance between your device and the Wi-Fi® Camera Unit.
- Use of other 2.4 GHz products, such as Bluetooth™ systems or microwave ovens, may cause interference with this product. Keep the Wi-Fi® Camera Unit at least 1.5 meter away from these types of products, or switch them off if they appear to be causing interference.

Lost connectionn

- Check your Wi-Fi® settings. If necessary, reconnect your Wi-Fi®. Ensure that the Wi-Fi® Camera Unit is switched ON. Wait a few minutes to make the connection with the Wi-Fi® system.

9. *Troubleshooting for Wi-Fi® Internet Viewing*

Category	Problem Description / Error	Solution
Account	I am unable to login even after registra-tion.	Please check your user name and password.
Account	I receive an error message saying: "Email ID is not registered".	Please ensure that you have registered with us. Tap **Sign Up** to create an account.
Account	What do I do if I forgot my pass-word?	Check your Android™ or iOS application. An email will be sent to your registered email address.
Account	I am unable to receive a one-time password.	1. The e-mail might have been sent to your Junk Mail Folder. Please check your Junk Mail Folder. 2. There might be a delay in getting your e-mail. Please wait a few minutes and refresh your email account.
Setting up	When the video is cut off, the application attempts to reconnect and this results in lost sound and choppy video.	You will need to turn off the Auto Lock function of your device to ensure continuous video/audio streaming.

Category	Problem Description / Error	Solution
Setting Up	While I am adding a new Camera to my account, I am not able to find any Cameras to add.	If you are trying to add a Camera which has previously been added into your account or another account, you will first have to re-power the Camera. Switch the parent unit off before connecting the camera to Wi-Fi®.
Setting Up	During setup on devices for Android™ and iOS, I am not able to find my Camera during the last step and the setup fails.	Please reset the Camera to setup mode and try again. Press and hold the PAIR button on the side of the camera until you hear a beep and voice prompt 'Ready for pairing'. When the Camera LED is off, this indicates that it is in setup mode. Now restart the setup from your smartphone again.
Connectivity issues	I am not able to access my Camera.	Please check if the Camera is within Wi-Fi® range. Please try to move the Camera closer to the router for better Wi-Fi® connectivity and try again.

Category	Problem Description / Error	Solution
Connectivity issues	I get a message: We are having problems accessing your camera.	This could be due to lack of internet connection. Please wait and try again later. 1. Please try again in a few minutes. This could be because of any issue with your internet connection. 2. If the problem remains, please restart your Camera to check if this fixes the problem. 3. Please restart your Wireless Router.
Connectivity issues	Even though I am accessing my Camera from the same Wi-Fi® network, I still find my Camera is shown as remote. I can only access it for 5 minutes at a time.	Please check your wireless router settings. For example, for Buffalo brand routers there is an option called Wireless Isolation. Please disable this option.
Connectivity issues	I found interference caused by my other webcam devices.	Video streaming performance is related to internet bandwidth, especially if you have 2 or more video streaming devices that are working through the same router.

Category	Problem Description / Error	Solution
General	What is the significance of the camera LED?	The LED indicates the following status: LED flashing Red: Your Camera is booting up. After a voice prompt the camera is booted up and ready for pairing. LED Cycling Blue/Red: Your camera is in pairing mode. LED Solid Blue: The camera is paired and set up to your account. LED Flashing Blue: The camera is live streaming. LED Off: No Power to camera.
General	Which platforms are supported for accessing my Camera?	Minimum requirement: Android™ 7.0 iPhone®/iPad® iOS version 10.0.
General	I do not hear any sound when I am accessing a remote Camera.	You can tap on the speaker icon in the video stream screen to hear audio. By default the audio is not ON when you are accessing a remote Camera.
General	What is the meaning of "Local Camera" and "Remote Camera"?	When you are accessing your Camera from the same wireless network (Home) in which it is configured, it is a Local Camera. When you are accessing your Camera away from your home it is a Remote Camera. You may be using 3G, 4G or 4G LTE or a Wi-Fi® connection outside of your home.

Category	Problem Description / Error	Solution
General	How do I download the App for Android™ and iOS devices?	• Open the Google Play Store on your Android™ device or App Store™ on your iOS device. • Select Search • Type in "Chillax Care" • The results will show the Chillax Care App • Select to install it
Camera	When I try to view the Camera, I get a prompt for Camera firmware upgrade. What should I do?	Please upgrade your firmware. This takes around 5 minutes. We push upgrades from time to time to improve the Camera features.
Viewing Camera	When I am in "remote mode", the video stops after 5 minutes. How do I view for longer?	When you are accessing your Camera via a network different from your home network (over the internet) your video times out after 5 minutes. You can click on the Camera again from the Android™/iOS application to start streaming again. If you are accessing from your web browser, then you can press on the Reload button to start viewing your Camera video stream again.
Features	How many users can access the Camera at one time?	It allows up to 4 users access with proper network connections.
Features	The sound alert setting threshold is not right.	You can Adjust Sound Sensitivity to trigger notifications under Camera Setting menu.

10. Standard Warranty

Consumer Products and Accessories Limited Warranty ("Warranty"). Thank you for purchasing this ChillaxHome or ChillaxBaby product manufactured by CHILLAX LTD ("Chillax").

What Does this Limited Warranty Cover?

Subject to the items listed below in the section "What is not Covered" Chillax warrants that this ChillaxHome or ChillaxBaby ("Product") will be free from defects in material and workmanship under normal use for a period of 1 year from the date of purchase and that any certified accessory ("Accessory") sold for use with this product will be free from defects in materials and workmanship under normal use for a period of 90-days from the date of purchase. This Limited Warranty is your exclusive warranty and is not transferable.

What is not covered?

This Limited Warranty excludes and does not cover:

- Normal deterioration or wear resulting from use;
- Damage caused by or resulting from misuse, abuse, or accident;
- Damage caused by or resulting from improper operation or storage;
- Damage caused by or resulting from contact with foreign substances, including, but not limited, to liquid, water, rain, humidity, perspiration, sand, dirt, and/or food;
- Damage caused by or resulting from the use of Non-Chillax branded or certified Products or Accessories or other peripheral equipment;
- Damage caused by or resulting from modifications, alterations, tampering, improper installation, or repairs by someone other than Chillax or their authorized representatives;
- Defects, damages, or the failure of Products or Accessories due to any communication service or signal you may subscribe to or use with the Products or Accessories; and,
- Periodic maintenance, repair and replacement of parts due to normal wear and tear.

What Other Limitations Are There?

THIS LIMITED WARRANTY SETS FORTH THE ENTIRE LIABILITY OF CHILLAX AND CONTAINS YOUR SOLE AND EXCLUSIVE REMEDY. OTHER THAN THIS LIMITED WARRANTY, CHILLAX MAKES NO ADDITIONAL REPRESENTATIONS OR WARRANTIES, EXPRESS OR IMPLIED, INCLUDING WARRANTIES OF MERCHANTABILITY OR FITNESS FOR A PARTICULAR PURPOSE. IF YOUR STATE DOES NOT PERMIT THE DISCLAIMER OF WARRANTIES, THEN THE IMPLIED WARRANTY OF MERCHANTABILITY AND FITNESS FOR A PARTICULAR PURPOSE IS LIMITED TO THE DURATION OF THIS LIMITED WARRANTY. REPAIR OR REPLACEMENT IS YOUR SOLE AND EXCLUSIVE REMEDY AGAINST CHILLAX. IN NO EVENT SHALL CHILLAX'S LIABILITY TO REPAIR OR REPLACE YOUR PRODUCT OR ACCESSORY EXCEED THE ORIGINAL PURCHASE PRICE OF THE PRODUCT AND ACCESSORY AND CHILLAX'S TOTAL LIABILITY FOR DAMAGES ARISING FROM THIS LIMITED WARRANTY SHALL NOT EXCEED THE PRICE YOU PAID FOR THE PRODUCT AND ACCESSORY REGARDLESS OF WHETHER SUCH CLAIM ARISES UNDER CONTRACT, STATUTE, TORT OR OTHERWISE. IN NO EVENT AND UNDER NO CIRCUMSTANCES WILL CHILLAX BE LIABLE FOR DIRECT, INDIRECT, INCIDENTAL, SPECIAL OR CONSEQUENTIAL DAMAGES OF ANY KIND, OR LOSS OF REVENUE OR PROFITS, LOSS OF BUSINESS, LOSS OF INFORMATION OR OTHER FINANCIAL LOSS ARISING OUT OF OR IN CONNECTION WITH THE ABILITY OR INABILITY TO USE THE PRODUCTS OR ACCESSORIES. ALL DISCLAIMERS, LIMITATIONS OF LIABILITY AND MODIFICAITONS OF WARRANTIES STILL APPLY EVEN IF THE LIMITED REMEDY OF REPAIR AND REPLACEMENT FAILS OF ITS ESSENTIAL PURPOSE.

Some jurisdictions do not allow the limitation or exclusion of incidental or consequential damages, so the above limitations or exclusions may not apply to you. This Limited Warranty gives you specific legal rights, and you may have other rights that vary from one jurisdiction to another.

Who is covered?

This Warranty extends only to the first consumer purchaser and is not transferable.

What will CHILLAX do?

CHILLAX or its authorized distributor at its sole discretion will, at no charge, repair or replace any Products or Accessories that do not conform to this Warranty. In the event that the replacement is necessary to remedy a defect in material or workmanship, CHILLAX may use new or remanufactured products, accessories or parts of equal quality to the original Product or Accessory.

How to Obtain Warranty Service or Other Information?

To obtain service or information, please email us at
hello@chillaxcare.com

You will receive instructions on how to ship the Products or Accessories at your expense and risk, to a CHILLAX Authorized Repair Centre. You must include: (a) the Product or Accessory; (b) the original proof of purchase (receipt) which includes the date, place and seller of the Product; (c) if a warranty card was included in your box, a completed

warranty card showing the serial number of the Product; (d) a written description of the problem; and, (e) your name, address, email address and telephone number.

FCC and IC regulations

FCC Part I5

NOTE: This equipment has been tested and found to comply with the limits for a Class B digital device, pursuant to Part 15 of the Federal Communications Commission (FCC) rules. These limits are designed to provide reasonable protection against harmful interference in a residential installation. This equipment generates, uses and can radiate radio frequency energy and, if not installed and used in accordance with the instructions, may cause harmful interference to radio communications. However, there is no guarantee that interference will not occur in a particular installation. If this equipment does cause harmful interference to radio or television reception, which can be determined by turning the equipment off and on, the user is encouraged to try to correct the interference by one or more of the following measures:

- Reorient or relocate the receiving antenna.
- Increase the separation between the equipment and receiver.
- Connect the equipment into an outlet on a circuit different from that to which the receiver is connected.
- Consult the dealer or an experienced radio/TV technician for help.

This device complies with Part 15 of the FCC rules. Operation is subject to the following two conditions: (1) this device may not cause harmful interference, and (2) this device must accept any interference received, including interference that may cause undesired operation. Privacy of communications may not be ensured when using this device.

To ensure safety of users, the FCC has established criteria for the amount of radio frequency energy that can be safely absorbed by a user or bystander according to the intended usage of the product. This product has been tested and found to comply with the FCC criteria.

This Class B digital apparatus complies with Canadian ICES-003. CAN ICES-3(B)/NMB-3(B).

WARNING

Changes or modifications, to this equipment not expressively approved by the party responsible for compliance could void the user's authority to operate the equipment.

The socket-outlet shall be installed near the equipment and shall be easily accessible.

Industry Canada

This device complies with Industry Canada license-exempt RSS standard(s): Operation is subject to the following Two conditions: (1) this device may not cause interference, and (2) this device must accept any interference, including interference that may cause undesired operation of the device.

The term "IC: " before the certification/registration number only signifies that the Industry Canada technical specifications were met. This product meets the applicable Industry Canada technical specifications.

Le présent appareil est conforme aux CNR d'Industrie Canada applicables aux appareils radio exempts de licence. L'exploitation est autorisée aux deux conditions suivantes : (1) l'appareil ne doit pas produire de brouillage, et (2) l'utilisateur de l'appareil doit accepter tout brouillage radioélectrique subi, même si le brouillage est susceptible d'en compromettre le fonctionnement.

This equipment complies with FCC/ISED radiation exposure limits set forth for an uncontrolled environment. This equipment should be installed and operated with minimum distance 20cm between the radiator& your body.

L'appareil est conforme aux limites d'exposition aux rayonnements spécifiées par la FCC/ISED pour les environnements non contr?lés. La distance entre le radiateur et le corps doit être d'au moins 20 cm lors de l'installation et du fonctionnement de l'appareil.

11. Technical Specifications

CAMERA UNIT

Radio Frequency	Proprietary 2412-2472MHz Wi-Fi® 802.11 b/g/n, FHSS:2402-2476MHz
Image sensor	Color CMOS 2M Pixels
IR LED	8 pcs
Operating Temperature	41 °F- 104°F (5 °C ~ 40 °C)
Power Adapter	Input: 100-240V AC, 50/60Hz, Output:5.0V,1500mA ***WARNING*** *Use only with provided power supply.*

Specifications are subject to change without prior notice.

PARENT UNIT

Radio Frequency	2402-2476MHz
Display	5" diagonal TFT LCD
Brightness Control	8 steps
Volume Control	8 steps
Operating Temperature	41°F – 104°F (5°C - 40°C)
Power Adapter	Input: 100-240V AC, 50/60Hz, Output: DC 5V, 1500mA ***WARNING*** *Use only with provided power supply.*
Battery (built-in)	3.8V, 3000mAh Lithium-ion polymer, re-chargeable battery pack ***WARNING*** *Do not attempt to replace the battery, but contact customer Service if it needs replacement.*

Specifications are subject to change without prior notice.

chillaxbaby

Developed by 5GENCARE™

Chillax, Chillaxcare, Chillaxbaby and the Logos, are trademarks of Chillax Care Limited. 5GenCare and the Logo are trademarks of 5GenCare Limited. Apple logo is trademarks of Apple Inc., registered in the U.S. and other countries. App Store is a service mark of Apple Inc. Google Play, Android are trademarks of Google Inc. Wi-Fi is a trademark of the Wi-Fi Alliance. All other trademarks are the property of their respective owners. © 2023 Chillax Care Limited. All rights reserved.

Printed in China