Acknowledgment

SPECIFICATION FOR APPROVEAL

CUSTOMER: ZLGD-A1-0447

PART NO.: ZLGD-Y20.5 X39.5-33-FR

DESCRIPTION: coil+hard ferrite sheet

SPECIFICATION: 20.5 x39.5,0.08× 80P，lead line length 33mm, (measured from edge of ferrite sheet)

DATE: 20260122

TRX APPROVAL		
Production	Audit	Recognition date
Xiaoxian Zeng	Zhihui Qiu	20260122
CUSTOMER APPROVAL		
Project	Approved	Recognition date
Result:	☐ Qualified ☐ Disqualified ☐ Other	

Dongguan city DFL Electronic Technology Co.,LTD

107 Xinfeng West Road, Shijie, Dongguan, Guangdong,

TEL：0769-86016320 FAX：0769-86372427

Dongguan city DFL Electronic Technology Co.,LTD

SPECIFICATION

DESC :	ZLGD-Y20.5X39.5-33-FR	version Rev:A	Customer:	ZLGD-A1-0447
			Description:	coil+hard ferrite sheet
			Date:	20260122

1、DIMENSION:(mm)

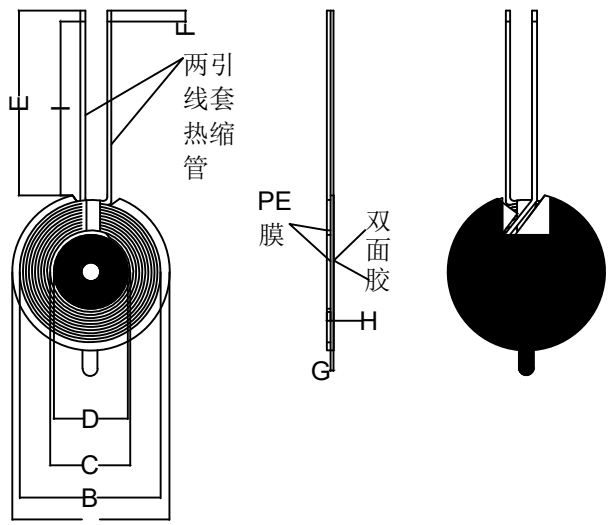

A	42.5±1.0
B	39.5±2.0
C	20.5±1.0
D	20.0±0.5
E	33.0±4.0
F	3.0±2.0
G	0.8±0.2
H	
I	
J	
K	
L	
M	
N	
O	
P	

Note:

1. The coil is pasted with G43*0.8 hard ferrite
2. Wrap 5MM high-temperature tape around the coil outlet position.
3. Double-sided tape for ears attached to the back of the ferite sheet
4. The coil cannot be loosened

2、schematic diagram:

3、WindingSpecification:

NO.	TERMINAL		WIRE	Turns	Winding Direction
1			0.08×80 P Silk covered wire	11TS	Counterclockwise

4、 ELECTRICAL CHARACTERISTICS:

TEMPERATURE:25±10°C,RELATIVE HUMIDITY:65±20%

NO.	ITEM	TERMINAL	SPECIFICATION	TEST FREQUENCY	TEST EQUIPMENTS
1	IND.		8.0UH ± 10% with hard ferrite added	100KHz/1.0V	SHDA 1062
2	IND.				
3	Q value				
4	DCR				

PREPARED BY/DATE	CHECKED BY/DATE	CUSTOMEU/DATE