蓝牙/2.4G双功能无线鼠标

操作使用手册

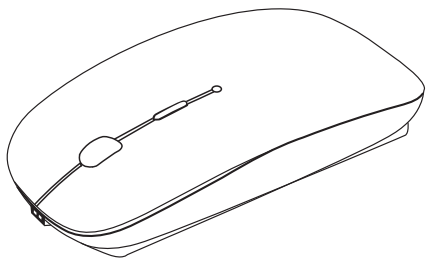

10M距离　超小型　MICRO　500万次　左右适用 男女通用

感谢亲!购买此款商务便携、家用及办公通用型无线鼠标，一个创新及容易使用的蓝牙/2.4G/双功能无线鼠标，将会给您带来无线传输的新体验。

商品基本参数表	
使用方式	蓝牙/无线2.4GUSB
分辨率	1000dpi/1200dpi/1600dpi三档
额定工作电压	3V
鼠标按键数	四个
额定工作电流	40uS-10mA
颜色	八色可选
可充电款电池	内置聚合物电池
传输距离	3米-10米范围
频率范围	2402-2480MHz
工作环境	-10度至45度
接收灵敏度	-75dbm（标准）
系统支持	Win8/10//MAC OS X操作系统，win7及以下系统请使用2.4GUSB 连接
商品尺寸	长L：112mm×宽W:57mm×高H:20mm
包装内容	无线鼠标\充电线\使用说明书\保修卡合格证

正面简易图说明

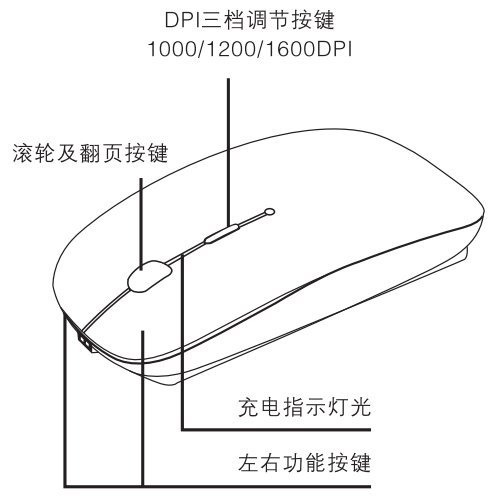

底部简易图说明

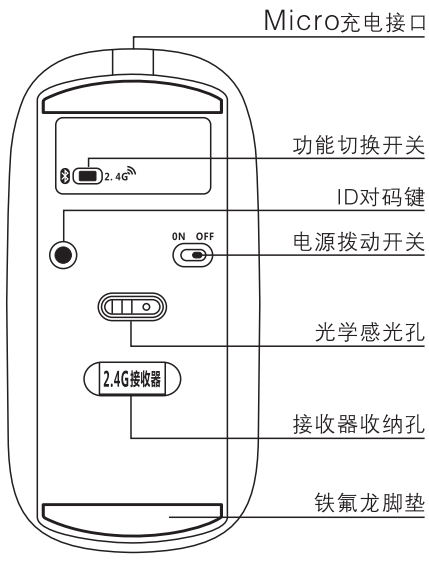

基本操作

1: 2.4G无线USB接收器连接方法

A. 将无线USB接收器插入电脑，待电脑识别到接收器，

B. 将鼠标底部功能切换开关拨至“2.4G”模式，打开鼠标电源开关，底部光电感应孔有黄色灯光亮一下灭，即可直接使用鼠标了。

2: 蓝牙连接

A. 首次连接：将鼠标底部功能切换开关拨至蓝牙“”模式，长按“ID对码键”3秒后放开，此时鼠标底部“光电感光孔”为蓝灯闪烁状态，

B. 打开电脑蓝牙界面，选择搜索蓝牙设备，待出现“Bluetooth_mouse”选择后点击连接，待电脑提示连接成功后鼠标底部蓝灯停止闪烁并灭掉，即可正常使用蓝牙功能鼠标。

C. 蓝牙回连：连接电脑以后，下次再次使用只需要打开鼠标电源开关即可，无需重复连接，如需要连接另外一台电脑，使用首次连接方法即可，如果多台电脑相互切换使用蓝牙功能 需要删除掉蓝牙界面之前链接的“Bluetooth_mouse”设备 重新按首次连接方法即可，

D. 休眠唤醒:鼠标长时间不使用，会自动进入深度休眠状态，重新使用鼠标时，需要按鼠标按键即可唤醒使用，唤醒时间需要1-2秒时间。

3: 鼠标充电

使用标配的Micro USB线对鼠标进行充电,电压低于3.3V时，低压报警（**底部光电感应孔会有蓝灯慢闪。一秒一次提示及时充电**），充电时候滚轮处红灯亮起，充满电 红灯灭，绿灯亮起，一般充电2小时左右，切勿充电时间过长，尽量使用电脑USB直接充电。

■ 关于电池

- 充电版蓝牙鼠标一次充电可以使用1个月（**每天连续使用2小时计算**）用完充电 1.5-2个小时充满（**充电时候鼠标滚轮地方有红色指示灯亮，充满电红灯灭绿灯亮及充满电**）
- 为了延长电池使用寿命，建议不使用鼠标时，请把鼠标开关打到off关闭鼠标，以及不要长时间进行充电，如果长时间不使用，尽量将鼠标充满电鼠标电源开关置于off位置
- 电池版蓝牙鼠标请勿随意丢弃电池或抛入火中，更换电池时，请将旧电池放入电池回收箱。

■ **简易故障排除**

1、电脑检测不到鼠标

请先确认鼠标打开电源开关，按底部的黑色小按钮3-5秒放开，（**注意按的时候不要按到鼠标其它按键**），底部光电感光孔是否有蓝灯闪烁，有蓝灯闪烁表明鼠标可以进入配对状态并发送蓝牙信号，无蓝灯闪烁，表明鼠标没通电或者无法进入配对状态，请检查电池是否安装正确，检查电池电量是否足够，操作过程是否正确，如以上都无问题，鼠标依然不能进入配对状态，此时请联系客服咨询。

2、鼠标可以进入配对状态下，电脑依然检测不到鼠标，请检查电脑蓝牙硬件驱动是否安装正确，并可以接收蓝牙信号。如果电脑蓝牙驱动正常，请联系客服咨询。

电脑蓝牙硬件检查方法，请参照电脑所在官网所提供的硬件驱动，或者下载第三方软件比如“360驱动大师”检测。升级并完全安装，苹果系统电脑请直接连网检测升级。**(蓝牙硬件检测小经验供参考)**

温馨提示：本产品严格按无线电子设备工艺所设计，符合人体工学，如连续长时间，或者不正确方法使用所造成的损害于本产品无关。为了生活更加愉快请合理安排作息时间。

Bluetooth / 2.4G dual-function wireless mouse

Operation manual

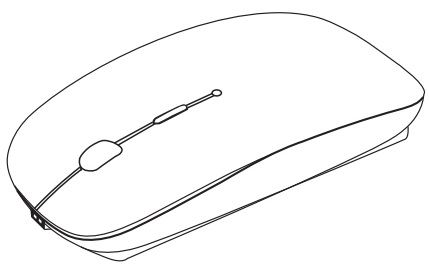

10M distance　Super miniature　MICRO　500 million times　For right and left hand

Thank you for purchasing this portable wireless mouse for business, home and office use. It is an innovative and easy-to-use Bluetooth / 2.4g/dual-function wireless mouse that will bring you a new wireless transmission experience.

Commodity basic parameter list	
Use method	Bluetooth/wireless 2.4GUSB
Resolution	1000dpi/1200dpi/1600dpi
Rated working voltage	3V
Mouse button count	4
Rated working current	40uS-10mA
Color	8 colors to choose
Rechargeable battery	Built-in polymer battery
Transmission distance	3-10 meter distance
Frequency range	2402-2480MHz
Working environment	-10 degree-45 degree
Receiving sensitivity	-75dbm (standard)
System support	Windows 8/10/MACOSX,Windows7 and below please use 2.4GUSB connection
Commodity size	L:112mm×W:57mm×H:20mm
Package content	Wireless mouse\charging line\instruction

Front simple diagram illustration

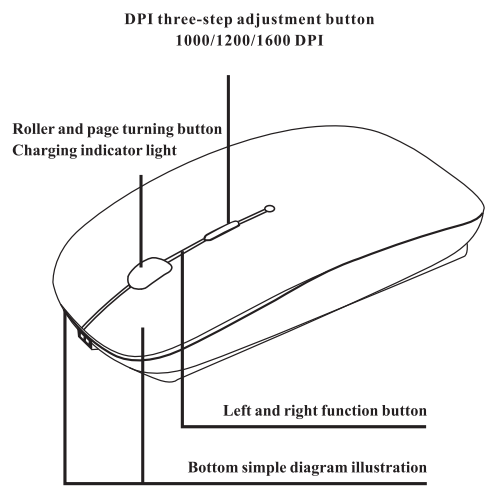

Simple Illustration Of Bottom Part

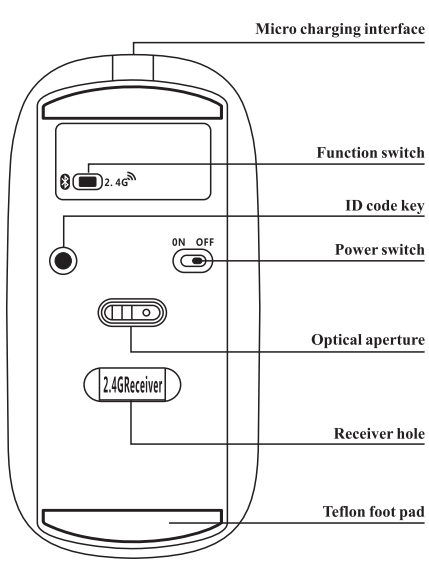

Basic operation

1:2.4G wireless USB receiver connection method

A.Insert the wireless USB receiver into the computer and wait for the computer to recognize the receiver.

B.Switch the function switch at the bottom of the mouse to " 2.4G " mode and turn on the power switch of the mouse; Photoelectric sensor hole at the bottom will have a yellow light off, then you can use the mouse directly.

2:Bluetooth connection

A.First connection: switch the function switch at the bottom of the mouse to Bluetooth " " mode; Long press the "ID key" for 3 seconds and then release it. At this time, the "photosensitive hole" at the bottom of the mouse is in the flashing state of blue light.

B.Open the Bluetooth interface on the computer, select the Bluetooth device to search, and when "Bluetooth_mouse" comes up, click "connect"; When the computer prompts that the blue light at the bottom of the mouse stops flashing and goes off after the connection is successful, the mouse with Bluetooth function can be used normally.

C.Bluetooth back connection: after connecting the computer, you only need to turn on the power switch of the mouse for the next use, and there is no need to repeat the connection; If you need to connect to another computer, use the first connection method. When multiple computers switch between Bluetooth devices, Bluetooth_mouse, which already has a Bluetooth interface, needs to be removed and re-connected the first time.

D.Sleep wake: if the mouse is not used for a long time, it will automatically enter the deep sleep state; To re-use the mouse, you need to press the mouse button to wake up; It takes 1-2 seconds to wake up.

3:Charging the mouse

Charge the mouse using the standard Micro USB cable; When the voltage is lower than 3.3v, low voltage alarm will be given. (blue light will slowly flash in the photoelectric sensor hole at the bottom, and prompt to charge in time once a second). When charging, the roller is red light on, when full of charge, the red light will be off, and green light will be on. General charge time is about 2 hours, do not charge too long; Try to charge your computer directly using USB.

About the battery

The rechargeable Bluetooth mouse can be used for one month on a single charge (2 hours of continuous use every day). When used up, it can be fully charged in 1.5-2 hours. (when charging, there is a red indicator light in the mouse roller; Fully charged when the red light goes out and the green light comes on.

In order to extend the battery life, it is recommended that when the mouse is not used, please turn the mouse switch to off and turn off the mouse. Don't charge for long periods of time. If not used for a long time, try to charge the mouse, and put mouse power switch in the off position.

Do not discard batteries or throw them into the fire. When replacing the battery, please put the old battery into the battery recycling box.

Simple troubleshooting(Bluetooth function)

1. The computer can not detect the mouse

Please make sure the mouse turns on the power switch first and press the small black button at the bottom for 3-5 seconds. Be careful not to press other mouse buttons when you press them. Observe whether the bottom photosensitive hole has blue light flashing; Blue light flashing indicates that the mouse can enter the pairing state and send Bluetooth signal; No blue light flashing, indicates that the mouse is not energized or unable to enter the pairing state; Please check whether the battery is installed correctly, whether the battery power is enough, and whether the operation process is correct; If there is no problem above, the mouse still cannot enter the pairing state, please contact the customer service for consultation at this time.

2. The mouse can enter the pairing state. If the computer still cannot detect the mouse, please check whether the computer Bluetooth hardware driver is installed correctly and can receive the Bluetooth signal. If the computer Bluetooth driver is normal, please contact the customer service for advice.

For computer Bluetooth hardware inspection method, please refer to the hardware driver provided on the official website of the computer, or download third-party software such as "360 driver master" inspection, upgrade and fully install; Apple system computer please directly connect to the network to test the upgrade. (Bluetooth hardware detection experience for reference).

Attentive Tips

This product is designed strictly according to the process of wireless electronic device, and it is ergonomic. The damage caused due to the use for long time continuously or incorrect use method has no relation with this product. For the more pleasant life, please arrange your schedule reasonably.

FCC Statement

This equipment has been tested and found to comply with the limits for a Class B digital device, pursuant to Part 15 of the FCC Rules. These limits are designed to provide reasonable protection against harmful interference in a residential installation. This equipment generates uses and can radiate radio frequency energy and, if not installed and used in accordance with the instructions, may cause harmful interference to radio communications. However, there is no guarantee that interference will not occur in a particular installation. If this equipment does cause harmful interference to radio or television reception, which can be determined by turning the equipment off and on, the user is encouraged to try to correct the interference by one or more of the following measures:

-- Reorient or relocate the receiving antenna.

-- Increase the separation between the equipment and receiver.

-- Connect the equipment into an outlet on a circuit different from that to which the receiver is connected.

-- Consult the dealer or an experienced radio/TV technician for help.

This device complies with FCC PART15 Rules. Operation is subject to the following two conditions:(1) This device may not cause harmful interference, and (2) this device must accept any interference received, including interference that may cause undesired operation.

Changes or modifications not expressly approved by the party responsible for compliance could void the user's authority to operate the equipment.