Preliminary (02/23/2022)

Figure 3.21 Securing the Rectifier to the Rectifier Add-On Panel

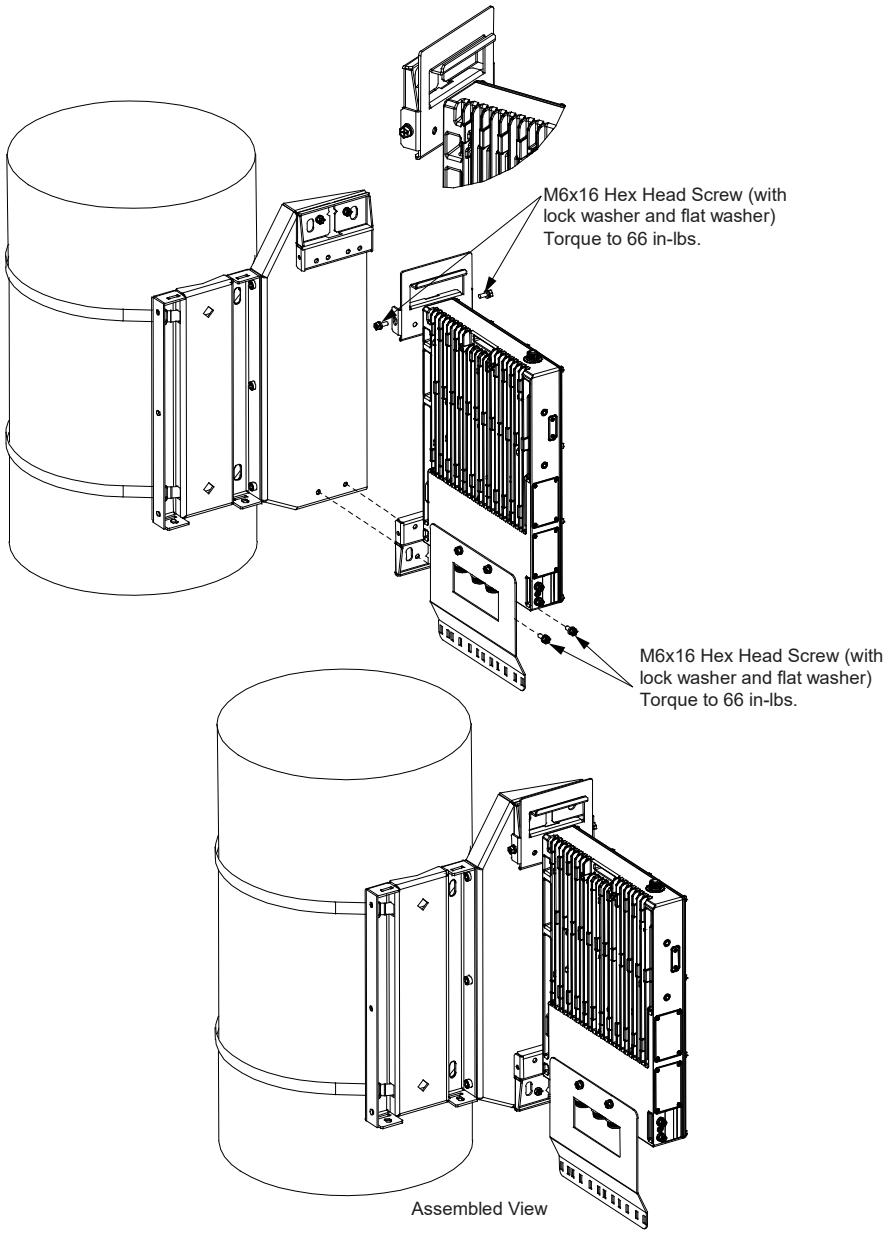

Preliminary (02/23/2022)

Figure 3.22 Securing the Battery Handle Bracket to the Battery Mounting Bracket (cont'd on next page)

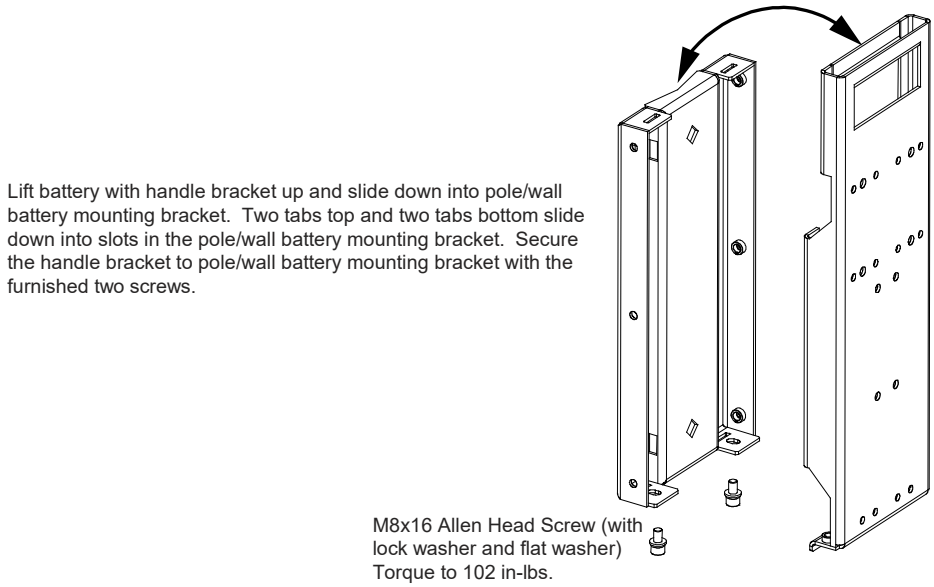

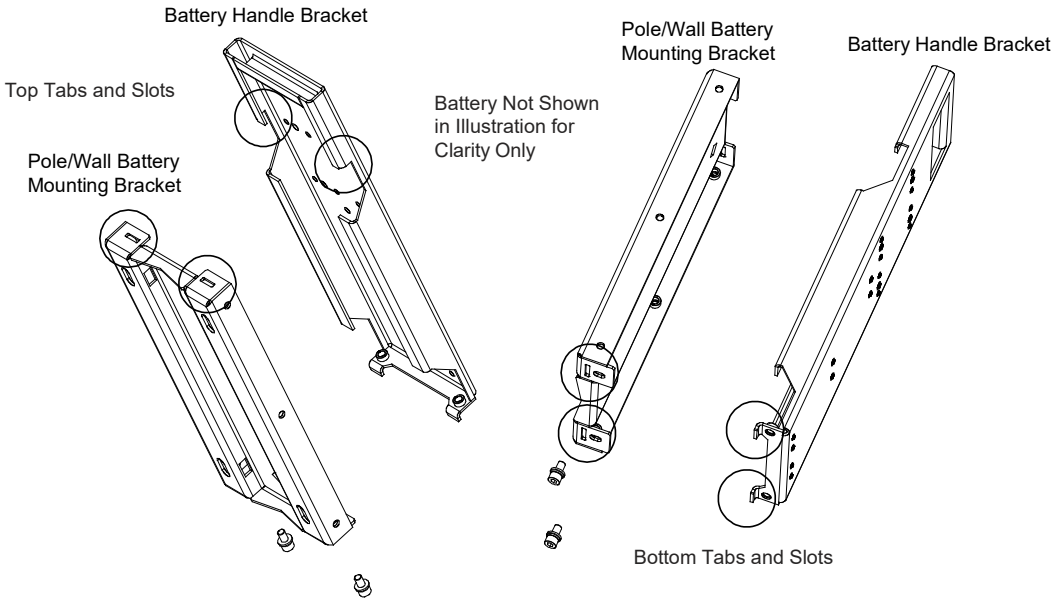

Preliminary (02/23/2022)

Figure 3.22 Securing the Battery Handle Bracket to the Battery Mounting Bracket (cont'd from previous page)

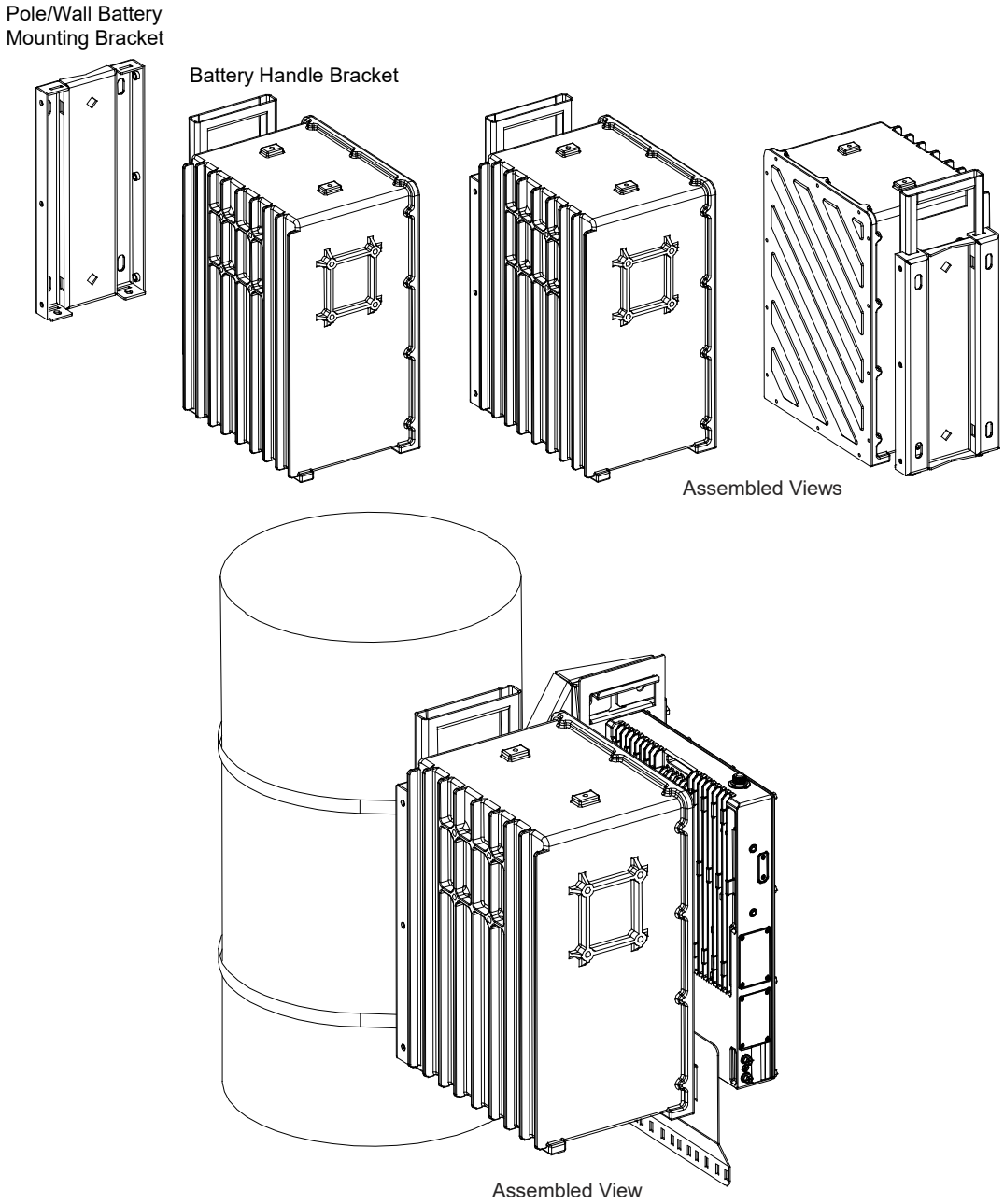

Preliminary (02/23/2022)

Figure 3.23 Securing the Battery Link Plate to the Battery and Rectifier

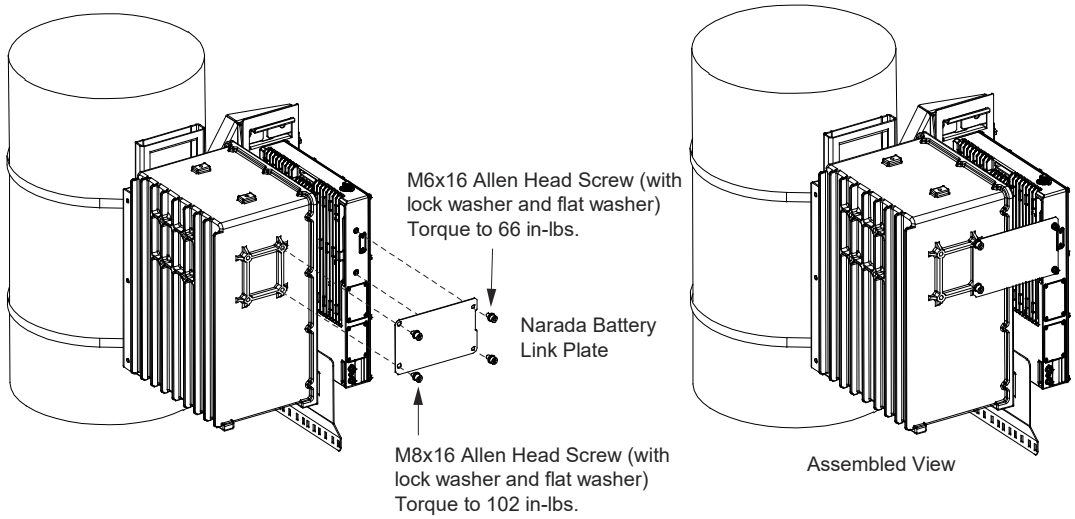

Preliminary (02/23/2022)

4 Making Electrical Connections

4.1 Important Safety Instructions

DANGER! Adhere to the “Important Safety Instructions” starting on page vii.

ALERT! Wear an ESD wrist strap (see “Static Warning” on page x).

WARNING! Rectifier warranty will be VOID if any perimeter screw is tampered with. DO NOT loosen or remove any perimeter screw. Removal of outer perimeter screws is a safety hazard.

NOTE! *If the rectifier’s front access panel is opened during installation, ensure the access panel is securely closed and the screws are torqued to 22 in-lbs.*

4.2 Wiring Considerations

All wiring and branch circuit protection should follow the current edition of the American National Standards Institute (ANSI) approved National Fire Protection Association's (NFPA) National Electrical Code (NEC), and applicable local codes. For operation in countries where the NEC is not recognized, follow applicable codes.

4.3 Electrical Connections Location Diagram

Electrical connections are made using separately ordered cable assemblies. One end of these cable assemblies contains a mating plug to the connector located on the bottom panel of the rectifier. Refer to Figure 4.1 for an electrical connection location diagram.

Preliminary (02/23/2022)

Figure 4.1 Electrical Connection Location Diagram

NOTE! *The rectifier battery port may be used as a Load 4 port. Refer to "Operation in a Batteryless Installation" on page 57.*

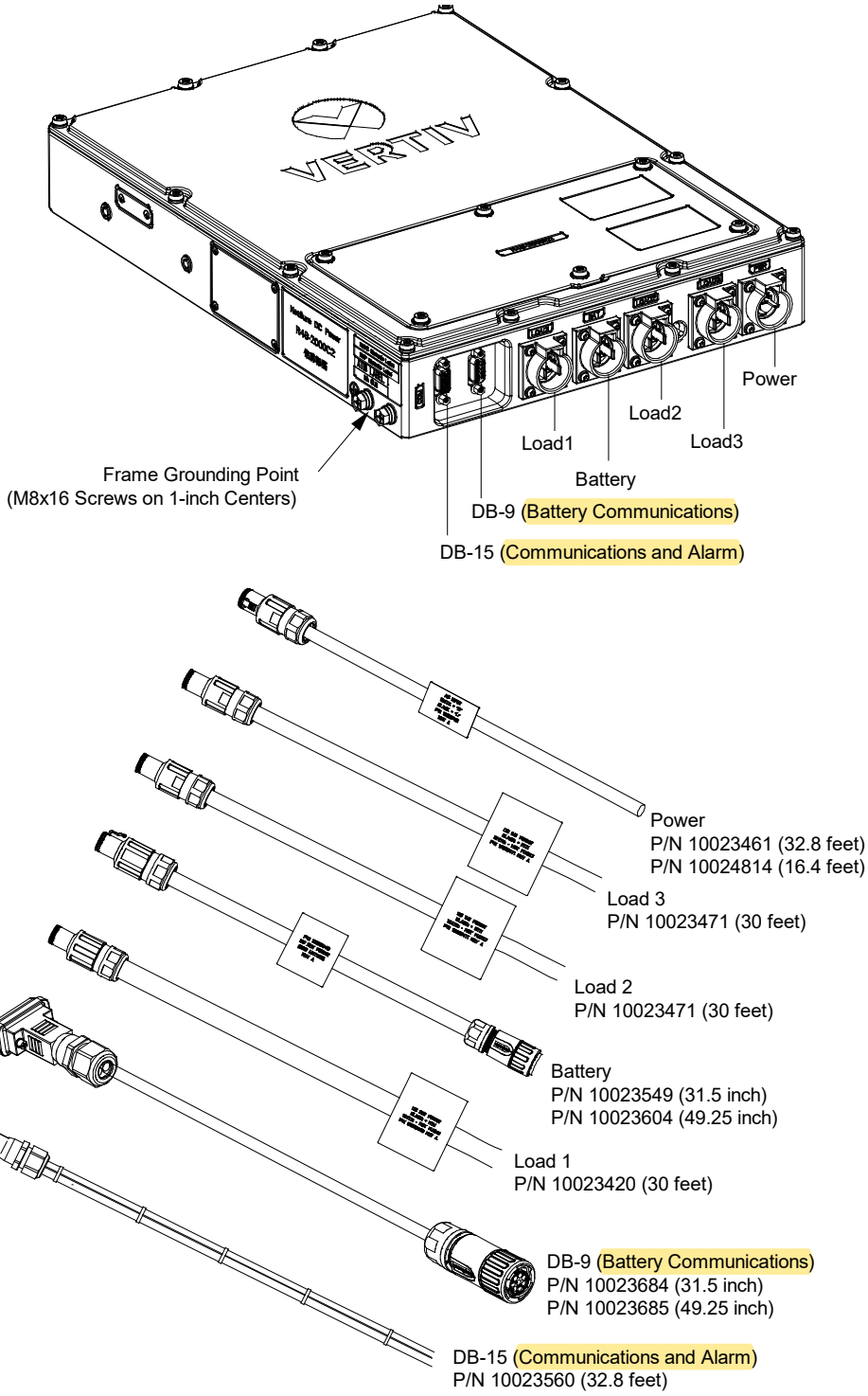

Preliminary (02/23/2022)

4.4 Rectifier Ground Connection

4.4.1 General

For grounding requirements, refer to the current edition of the American National Standards Institute (ANSI) approved National Fire Protection Association's (NFPA) National Electrical Code (NEC), applicable local codes, and your specific site requirements.

4.4.2 Positive Grounding

As default, the power system is positive grounded. The Return (+) Bar of the power system is factory connected to the chassis PE terminal. If customer chooses to float the DC bus, perform the following procedure.

Procedure

1. Refer to "Opening / Closing the Front Access Panel" on page 62, and open the rectifier enclosure front access panel.
2. Locate the cable connected to the Return (+) Bar that is secured to the chassis PE terminal shown in Figure 4.2. Remove the cable from the chassis PE terminal and insulate and tie back the unconnected end.
3. Refer to "Opening / Closing the Front Access Panel" on page 62, and close the rectifier enclosure front access panel.

Figure 4.2 Configuring Rectifier Grounding

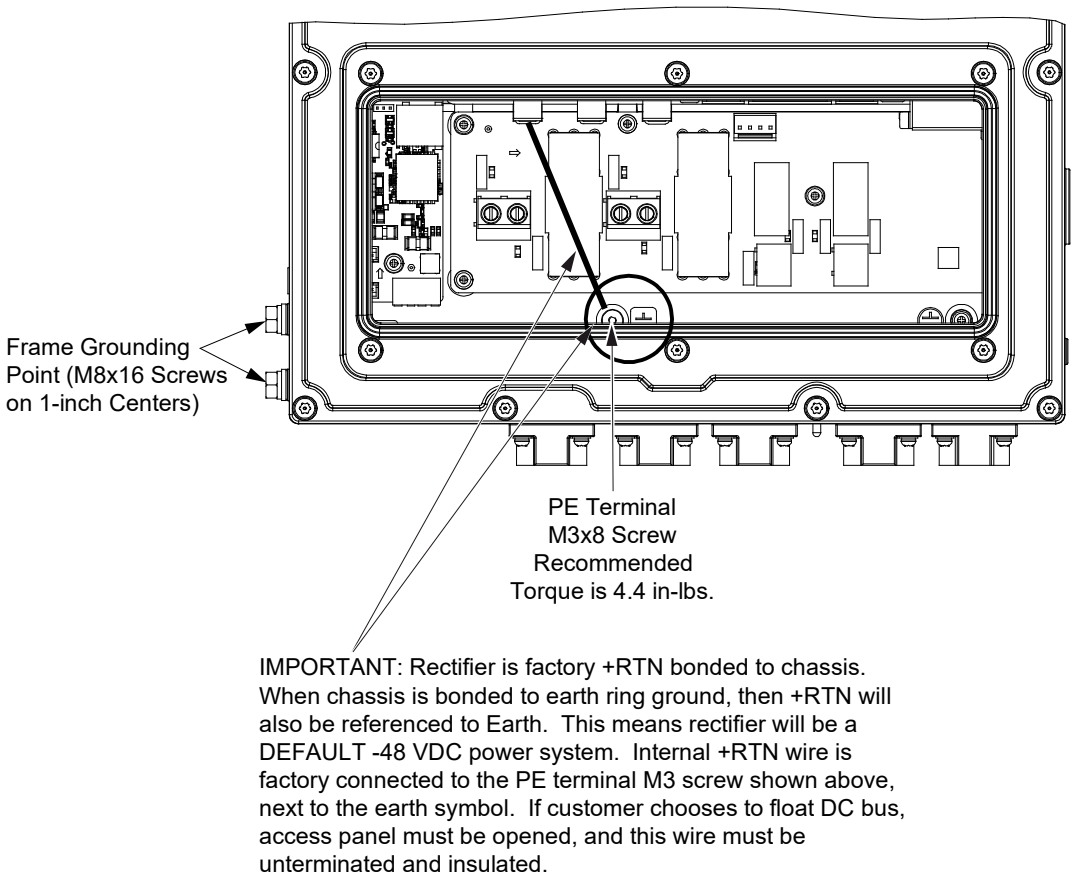

Preliminary (02/23/2022)

4.4.3 Rectifier Frame Grounding

Two (2) M8x16 screws are located on the rectifier left side panel for installation of a customer furnished frame ground lug. Screws are spaced on 1-inch centers.

Procedure

1. Connect the rectifier chassis to the site grounding point with a two-hole lug. Lug should be crimped per lug manufacturer's specifications. Refer to Figure 4.3 for location and recommended torque.

Figure 4.3 Rectifier Frame Grounding Location

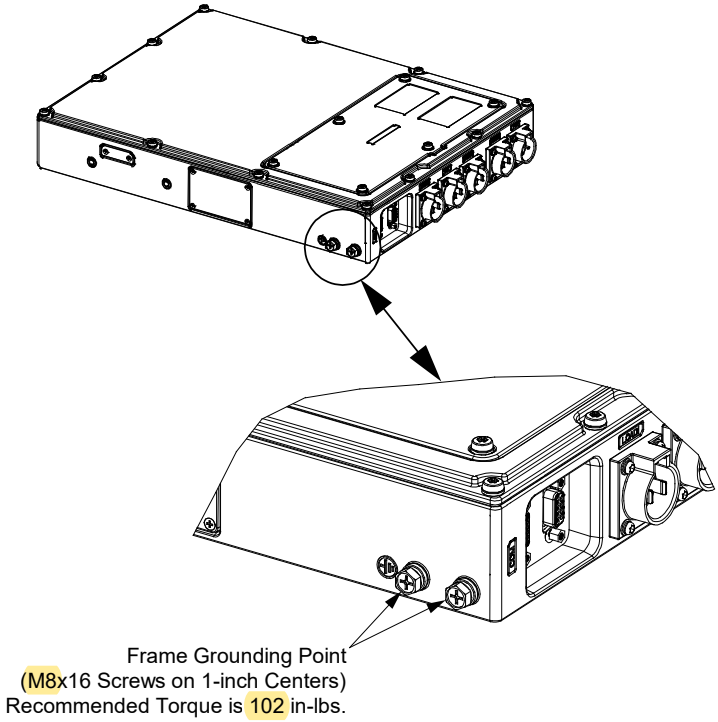

4.5 Battery Ground Connection

4.5.1 General

For grounding requirements, refer to the current edition of the American National Standards Institute (ANSI) approved National Fire Protection Association's (NFPA) National Electrical Code (NEC), applicable local codes, and your specific site requirements.

4.5.2 Battery Frame Grounding

Two (2) M6 screw inserts are provided on the battery for installation of a customer provided 2-hole frame ground lug. Screw inserts are spaced on 5/8-inch centers. Two (2) M6 screws are provided.

Procedure

1. Connect the battery chassis to the site grounding point with a two-hole lug. Lug should be crimped per lug manufacturer's specifications.

Preliminary (02/23/2022)

4.6 Nominal 120 VAC / 220 VAC / 240 VAC Input Power and AC Input Equipment Grounding Connections

ALERT! AC input power must be turned off before connecting or disconnecting the AC input plug-in connector.

The rectifier is equipped with a plug-in AC input power connector located on the bottom of the enclosure. See Figure 4.1 for location. A separately ordered AC input power cable assembly with a mating plug is required (refer to Figure 4.4). See also "Pre-Assembled Cables" on page 2.

- This rectifier requires an external AC input branch circuit protective device rated for 15 A.
  - Assuming 208 VAC or 240 VAC Nominal Input: 15 A, 2-pole.
  - Assuming 120 VAC Nominal Input: 15 A, 1-pole (120 VAC results in reduced power output).

Procedure

1. Connect the separately ordered AC input power cable assembly to the AC input power source as shown in Figure 4.4. Connect the green lead to Ground. Connect the white lead to Neutral. Connect the black lead to Line.

Figure 4.4 Mating AC Input Power Cable Assembly P/N 10023461 and P/N 10024814 (AC Input Power Connector)

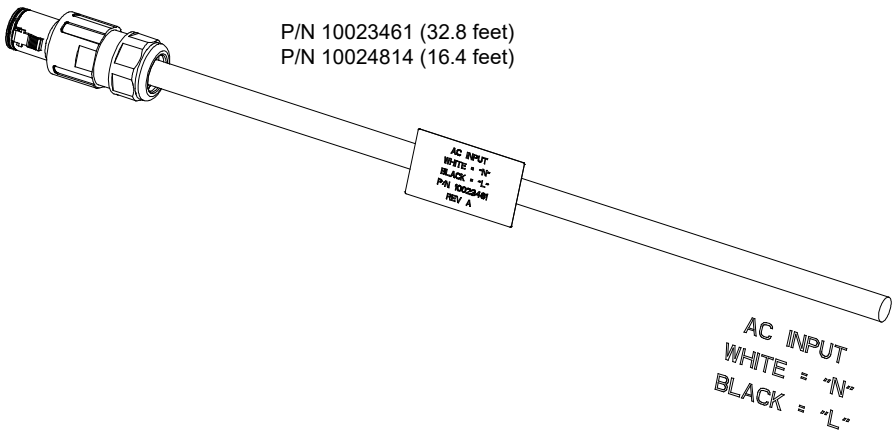

Preliminary (02/23/2022)

4.7 -48 VDC Output Load Connections

4.7.1 General

WARNING! Check for correct polarity before making connections.

ALERT! AC power and battery power must be turned off before connecting or disconnecting any DC load plug-in connector.

4.7.2 -48 VDC Output Load1 Connections (2kW)

The rectifier is equipped with a plug-in DC output Load1 "bulkhead" type connector located on the bottom of the enclosure. See Figure 4.1 for location. A separately ordered DC output cable assembly with a mating plug is required (refer to Figure 4.5). See also "Pre-Assembled Cables" on page 2.

Procedure

1. Connect the separately ordered DC output Load1 cable assembly to Load 1 (2kW) as shown in Figure 4.5. Connect the black lead to Load Return. Connect the white lead to -48 VDC Load.

Figure 4.5 Mating Load1 Cable Assembly P/N 10023420 (DC Output Load1 Connector)

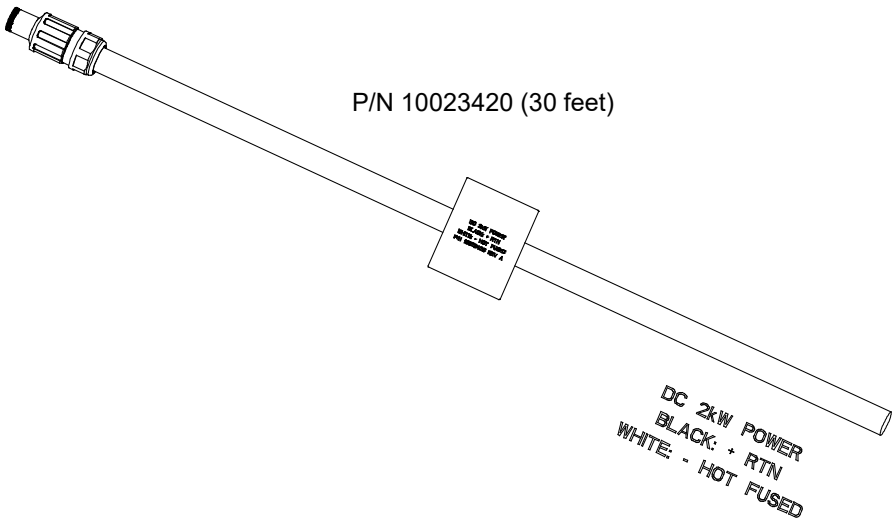

Preliminary (02/23/2022)

4.7.3 -48 VDC Output Load2 and Load3 Connections (1kW)

The rectifier is equipped with plug-in DC output Load2 and Load3 "bulkhead" type connectors located on the bottom of the enclosure. See Figure 4.1 for location. Separately ordered DC output cable assemblies with mating plugs are required (refer to Figure 4.6). See also "Pre-Assembled Cables" on page 2.

Procedure

1. Connect the separately ordered DC output Load2 / Load3 cable assemblies to Load 2 (1kW) and Load 3 (1kW) as shown in Figure 4.6. Connect the black lead to Load Return. Connect the white lead to -48 VDC Load.

Figure 4.6 Mating Load2 / Load3 Cable Assembly P/N 10023471 (DC Output Load2 and Load3 Connector)

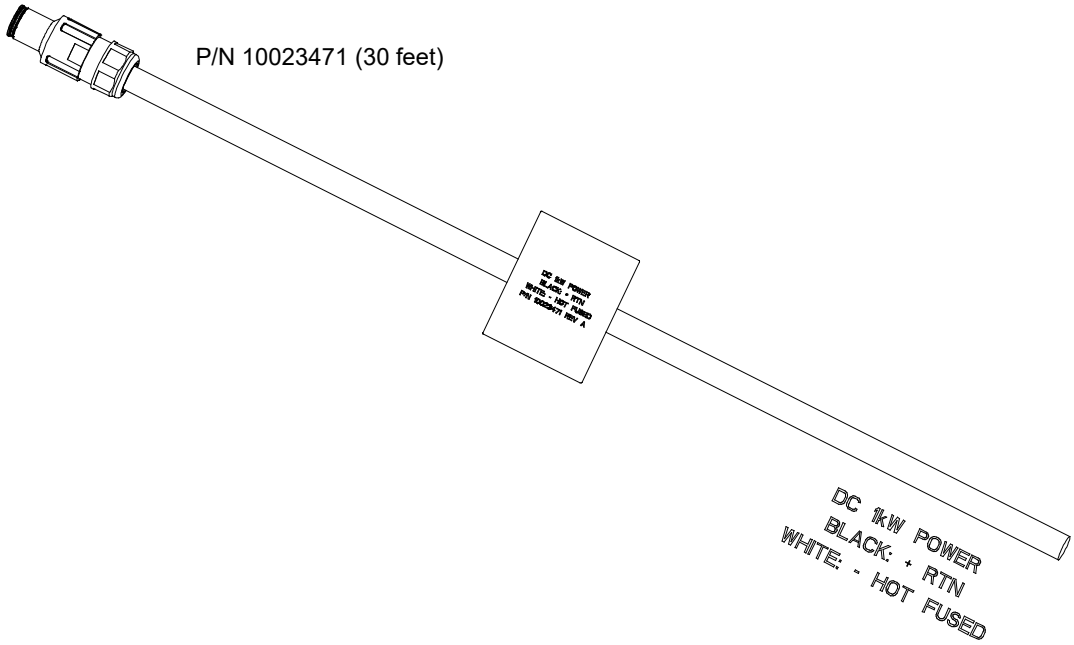

Preliminary (02/23/2022)

4.8 External Alarm and Communications Connections (DB15)

4.8.1 General

The rectifier is equipped with a plug-in external alarm and communication connector located on the bottom of the enclosure. See Figure 4.1 for location. A separately ordered external alarm and communications cable assembly with a mating plug is required (refer to Figure 4.7). See also “Pre-Assembled Cables” on page 2.

NOTE! *A laptop test cable is available (P/N 10024815) that allows a technician to communicate with the rectifier on ethernet using the controller’s webpages. This cable has an RJ-45 connector for connection to a laptop and a DB-15 connector for connection to the rectifier.*

Procedure

1. Connect the separately ordered external alarm and communication cable assembly to external alarm and communications circuits as shown in Figure 4.7. See also Table 4.1 for connector pin-outs. Refer to the remainder of this section for further information.

Figure 4.7 Mating External Alarm and Communications Cable Assembly P/N 10023560 (DB15 Connector)

P/N 10023560 (32.8 feet)

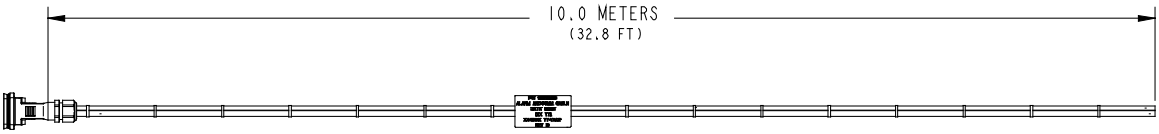

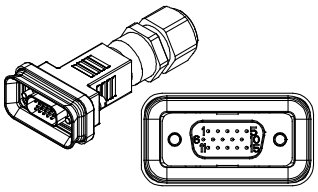

	CONNECTOR INFORMATION			
	CONNECTOR		14190823	
DB-15 CABLE NO.	PIN	COLOR	CUSTOMER END PIN-OUTS	
CABLE #1, 4 PAIR, DO’s, UNSHIELDED	1	PR 1, WHT/BLU	DO1 - COM	RECTIFIER ALARM OUTPUTS: 1: FUSE FAIL 2: SPD FAIL 3: AC FAIL 4: RECTIF FAIL
	2	BLU	DO1-SIGNAL	
	3	PR 2, WHT/ORG	DO2 - COM	
	4	ORG	DO2-SIGNAL	
	5	PR 3, WHT/GRN	DO3 - COM	
	10	GRN	DO3-SIGNAL	
	8	PR 4, WHT/BRN	DO4 - COM	
	9	BRN	DO4-SIGNAL	
CABLE #2, 4 PAIR, SHIELDED, ETHERNET & RS-485	6	PR 1, WHT/BLU	RS-485-1A	NORTHBOUND RS-485
	7	BLU	RS-485-1B	
	11	PR 2, WHT/ORG	ETH_RX-	ETHERNET
	12	ORG	ETH_RX+	
	13	PR 3, WHT/GRN	ETH_TX-	
	14	GRN	ETH_TX+	
	15	PR 4, WHT/BRN	NOT CONNECTED -CUT OUT	
	X	BRN	CUT OUT	

Preliminary (02/23/2022)

Table 4.1 DB15 Pin Definition

Pin	Signal Name	Description
1	Digital Output1+	Alarm Output
2	Digital Output 1-	
3	Digital Output 2+	
4	Digital Output 2-	
5	Digital Output 3+	
6	RS485_1A	The northbound interface to the NMS (Network Management System).
7	RS485_1B	
8	Digital Output 4+	Alarm Output
9	Digital Output 4-	
10	Digital Output 3-	
11	ETH_RX-	Ethernet
12	ETH_RX+	
13	ETH_TX-	
14	ETH_TX+	
15	--	No Connection

4.8.2 Rectifier Digital Output (DO) Dry Relay Contacts

Function and Operation State

Refer to Table 4.2 for rectifier digital output (DO) dry relay contacts function and operation state.

NOTE! *The contact operation can be changed by moving the jumpers for each of the connectors to the alternate location, as described in "Changing the Alarm Relay Configuration for the Digital Output (DO) Relay Functions" on page 53.*

Table 4.2 Digital Output (DO) Dry Relay Contacts

Dry Contact	Function	Jumper Connection	Dry Contact State when Alarm is Active
DO1	Fuse / Breaker Fail	JP4, short pin 1 and 2	Open
		JP4, short pin 2 and 3	Closed
DO2	SPD Alarm Fail	JP3, short pin 1 and 2	Open
		JP3, short pin 2 and 3	Closed
DO3	AC OV or AC UV	JP2, short pin 1 and 2	Open
		JP2, short pin 2 and 3	Closed
DO4	Rectifier Fail	JP1, short pin 1 and 2	Open
		JP1, short pin 2 and 3	Closed

Digital Output (DO) Relay Ratings

a) 30 VDC: 1 A resistive.

b) 125 VAC: 0.5 A resistive.

Preliminary (02/23/2022)

Changing the Alarm Relay Configuration for the Digital Output (DO) Relay Functions

The alarm relay contact configurations can be changed. Refer to the following procedure.

Procedure

DANGER! Turn off AC input to unit before performing the following procedure.

1. Refer to "Opening / Closing the Front Access Panel" on page 62, and open the rectifier enclosure front access panel.
2. Locate jumpers JP1, JP2, JP3, and JP4. Set the jumpers per site requirements. See Table 4.2 and Figure 4.8.
3. Refer to "Opening / Closing the Front Access Panel" on page 62, and close the rectifier enclosure front access panel.

Figure 4.8: Changing Alarm Relay Configuration for Digital Output (DO) Relay Functions

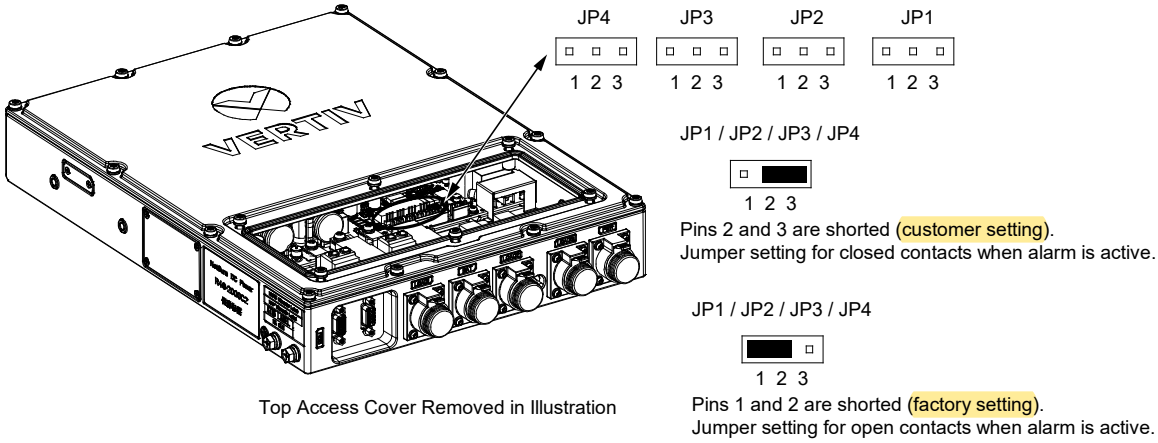

Preliminary (02/23/2022)

4.9 -48 VDC Battery Connections

WARNING! Check for correct polarity before making connections.

ALERT! Battery power must be turned off before connecting or disconnecting the battery plug-in connector.

NOTE! *The rectifier battery port may be used as a Load 4 port. Refer to "Operation in a Batteryless Installation" on page 57.*

The rectifier is equipped with a plug-in battery connector located on the bottom of the enclosure. See Figure 4.1 for location. A separately ordered battery cable assembly with a mating plug is required (refer to Figure 4.9). See also "Pre-Assembled Cables" on page 2

Procedure

1. Connect the separately ordered battery cable assembly to a Narada battery. Refer to Figure 4.11 for a rectifier and Narada battery wiring diagram.

Figure 4.9 Mating Narada Battery Cable Assembly P/N 10023549 and P/N 10023604 (Battery Connector)

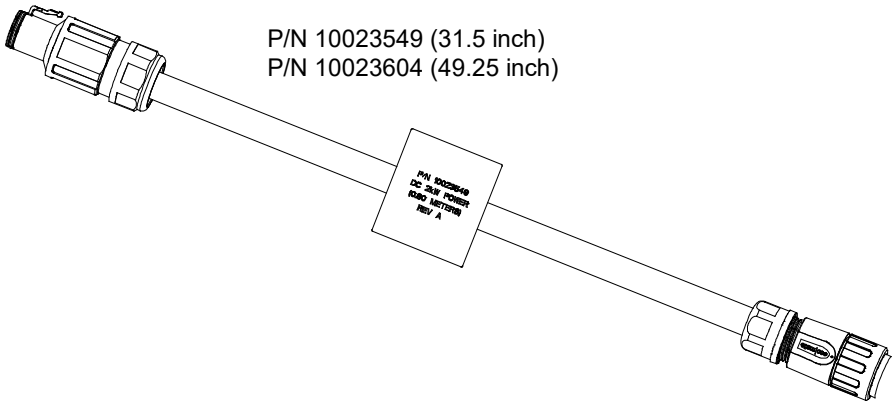

Preliminary (02/23/2022)

4.10 Battery Alarm Interface Connections (DB9)

The rectifier is equipped with a plug-in battery alarm interface connector located on the bottom of the enclosure. See Figure 4.1 for location. A separately ordered battery alarm and communications cable assembly with a mating plug is required (refer to Figure 4.10). See also “Pre-Assembled Cables” on page 2.

Procedure

1. Connect the separately ordered battery alarm and communications cable assembly to a Narada battery. Refer to Figure 4.11 for a rectifier and Narada battery wiring diagram. See also Table 4.3 for connector pin-outs.

Figure 4.10 Mating Narada Battery Alarm Interface Cable Assembly P/N 10023684 and P/N 10023685 (DB9 Connector)

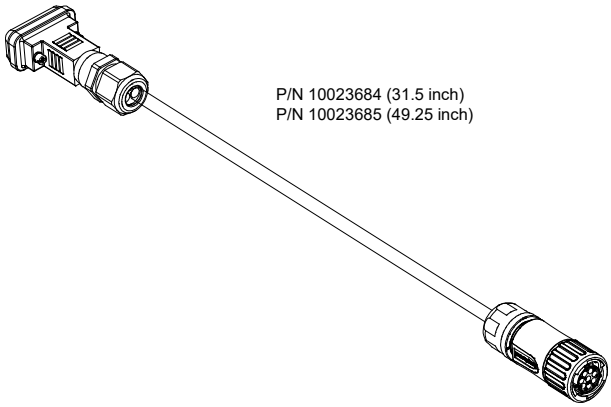

Table 4.3 DB9 Pin Definition

Pin	Signal Name	Description
1	RS485_2A	The southbound RS485 interface to the battery.
2	RS485_2B	The southbound RS485 interface to the battery.
3	--	--
4	--	--
5	--	--
6	CAN+	Communicate with other rectifiers for parallel installation.
7	CAN-	Communicate with other rectifiers for parallel installation.
8	--	--
9	Digital Input	Sense the breaker state for parallel installation.

Note: Pins 6, 7, and 9 and not used in current application (FUTURE use).

Preliminary (02/23/2022)

4.11 Rectifier and Narada Battery Wiring Diagram

See Figure 4.11.

Figure 4.11 Rectifier and Narada Battery Wiring Diagram

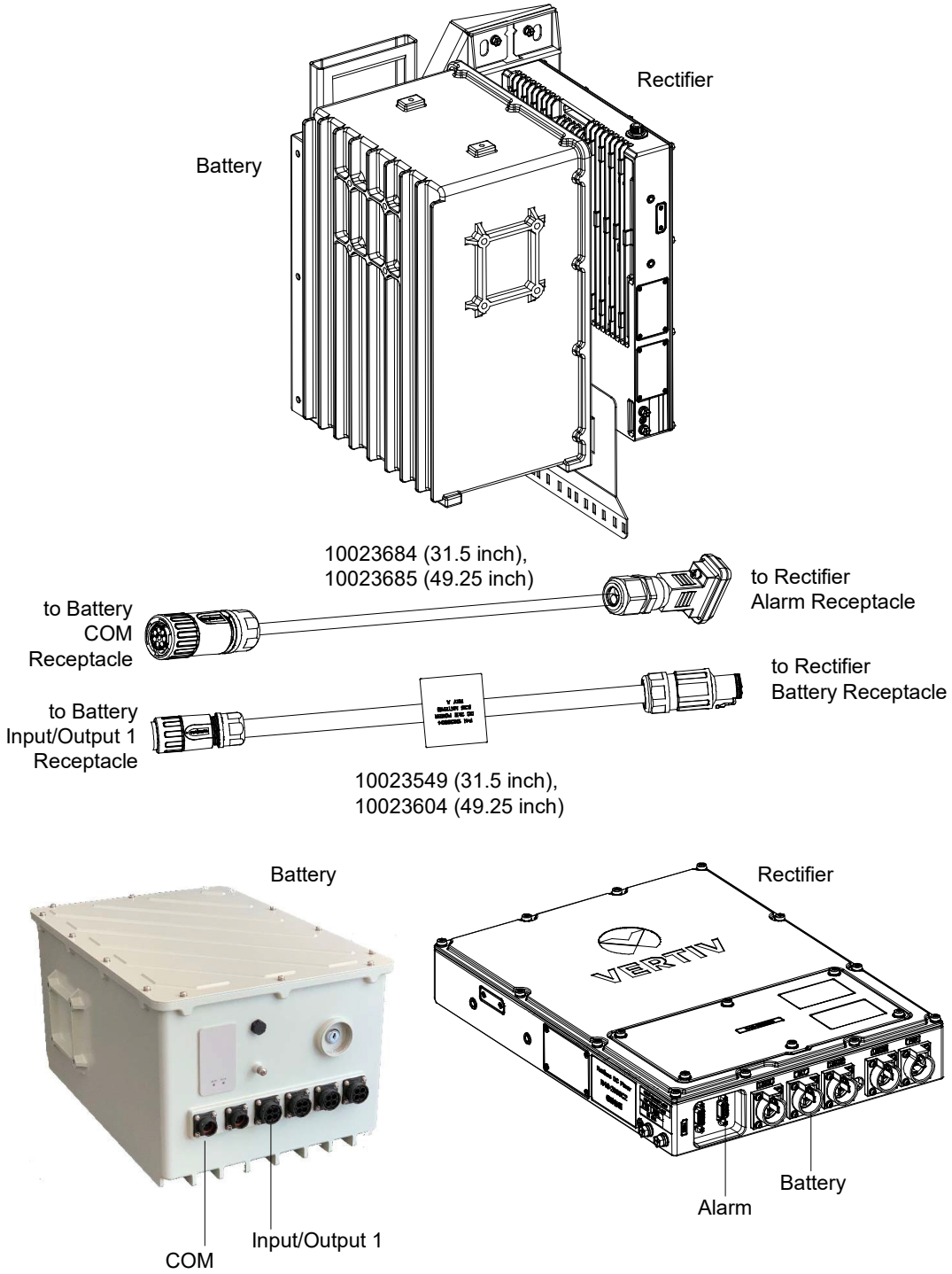

Preliminary (02/23/2022)

4.12 Operation in a Batteryless Installation

The rectifier may be used in a batteryless installation. Refer to this section for batteryless installation notes and to set up the rectifier for batteryless operation.

Batteryless Installation Notes

The rectifier battery port may be used as a Load 4 port. Refer to Figure 4.1 on page 45 for the battery port location. Use the same pre-assembled cable as used for the Load 1 port. See Table 1.3 on page 2 for Load 1 cable part number and description.

-48 VDC Output Load4 Connections (2kW) (to Battery Port when used in a Batteryless Application)

WARNING! Check for correct polarity before making connections.

ALERT! AC power and battery power must be turned off before connecting or disconnecting any DC load plug-in connector.

The rectifier is equipped with a plug-in Battery connector located on the bottom of the enclosure. The rectifier Battery port may be used as a Load4 port in a batteryless application. A separately ordered DC output cable assembly with a mating plug is required (refer to Figure 4.12).

Procedure

1. Connect the separately ordered DC output Load4 cable assembly to Load 4 (2kW) as shown in Figure 4.12. Connect the black lead to Load Return. Connect the white lead to -48 VDC Load.
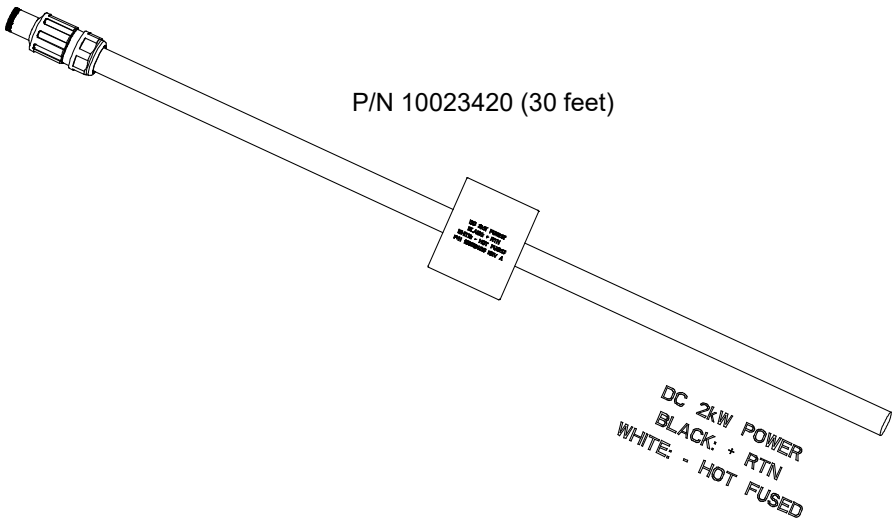
Figure 4.12 Mating Load4 Cable Assembly P/N 10023420 (to Battery Port when used in a Batteryless Application)