Preliminary (02/23/2022)

Figure 3.6 Installing the Top and Bottom Mounting Brackets and Strain Relief Plate to the Rectifier (cont'd on next page)

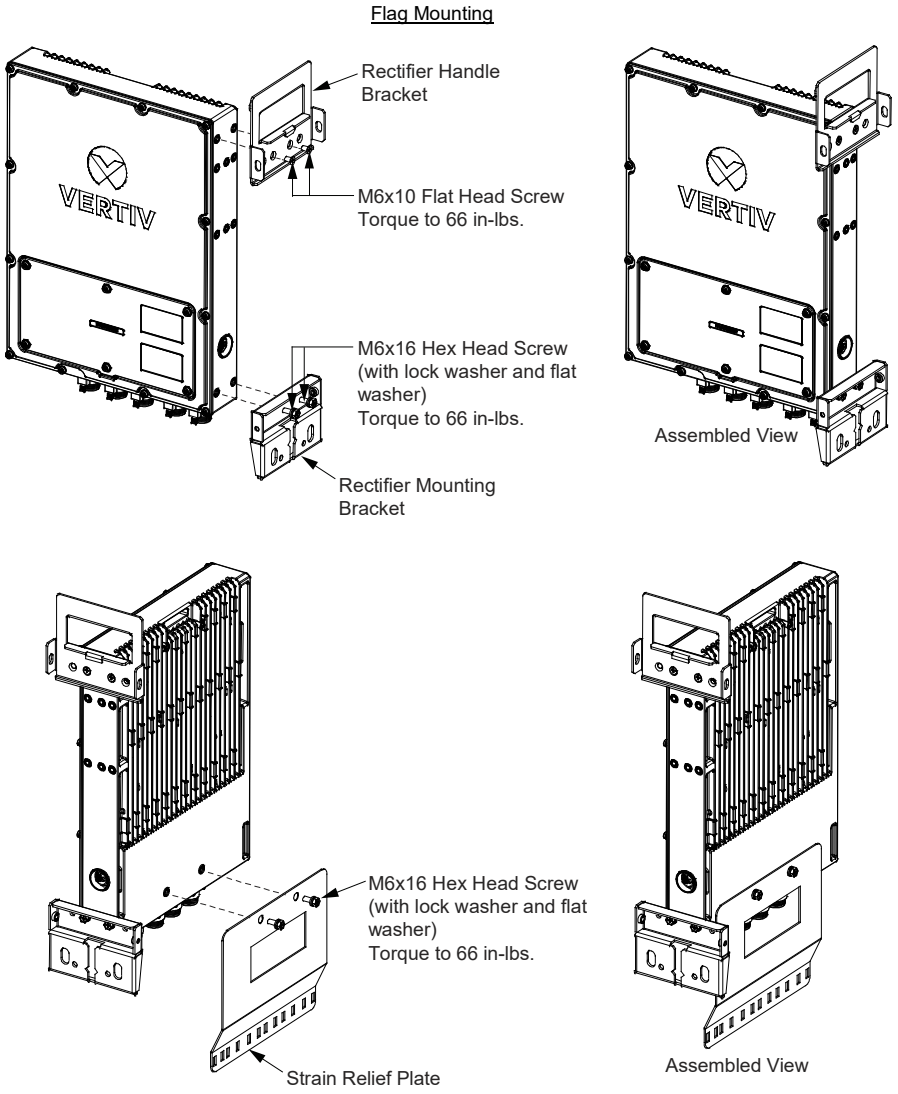

Preliminary (02/23/2022)

Figure 3.6 Installing the Top and Bottom Mounting Brackets and Strain Relief Plate to the Rectifier (cont'd from previous page)

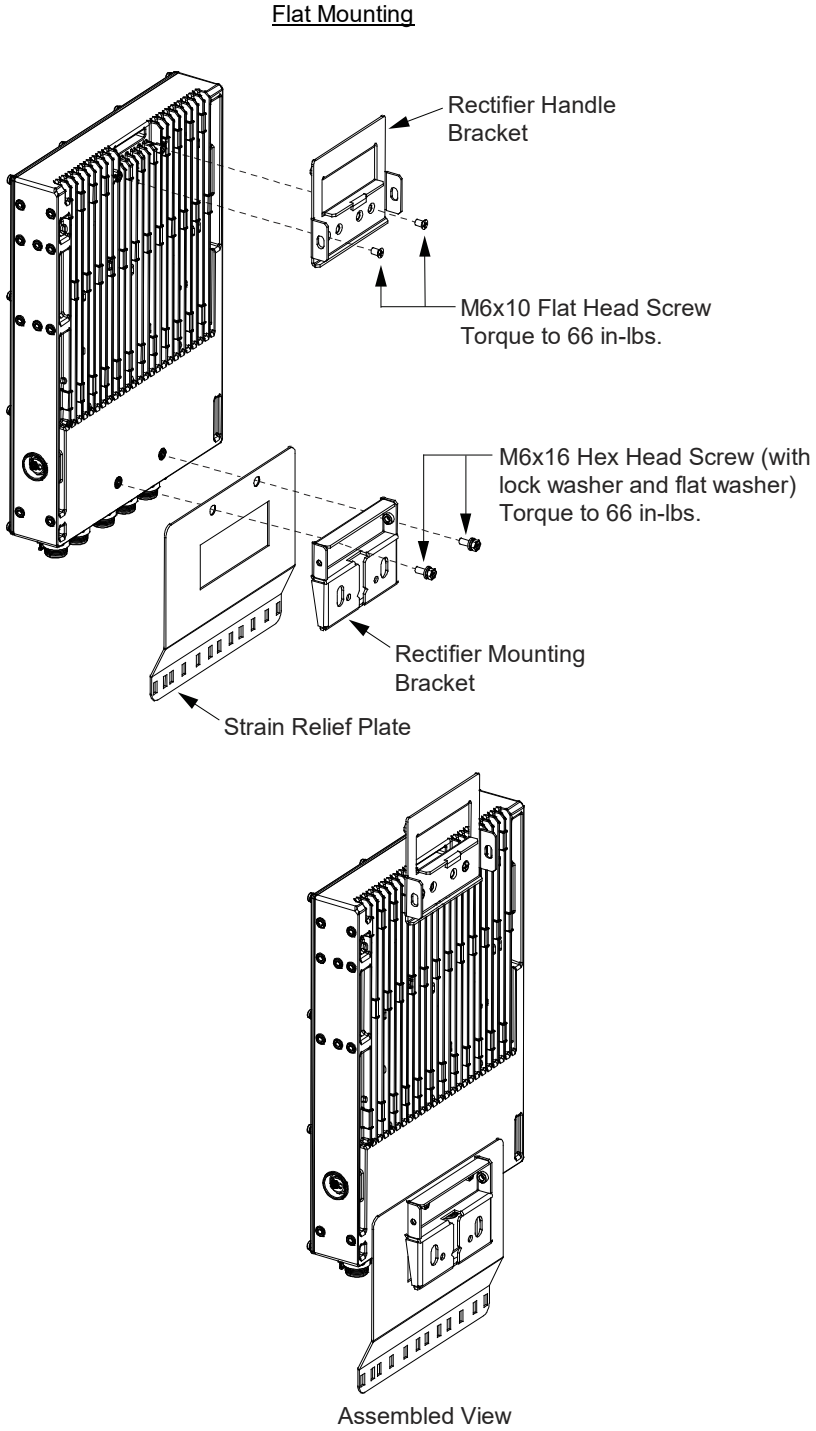

Preliminary (02/23/2022)

Figure 3.7 Securing the Rectifier to the Pole at the Top (Pole Mounting Shown, Wall Mounting Similar)

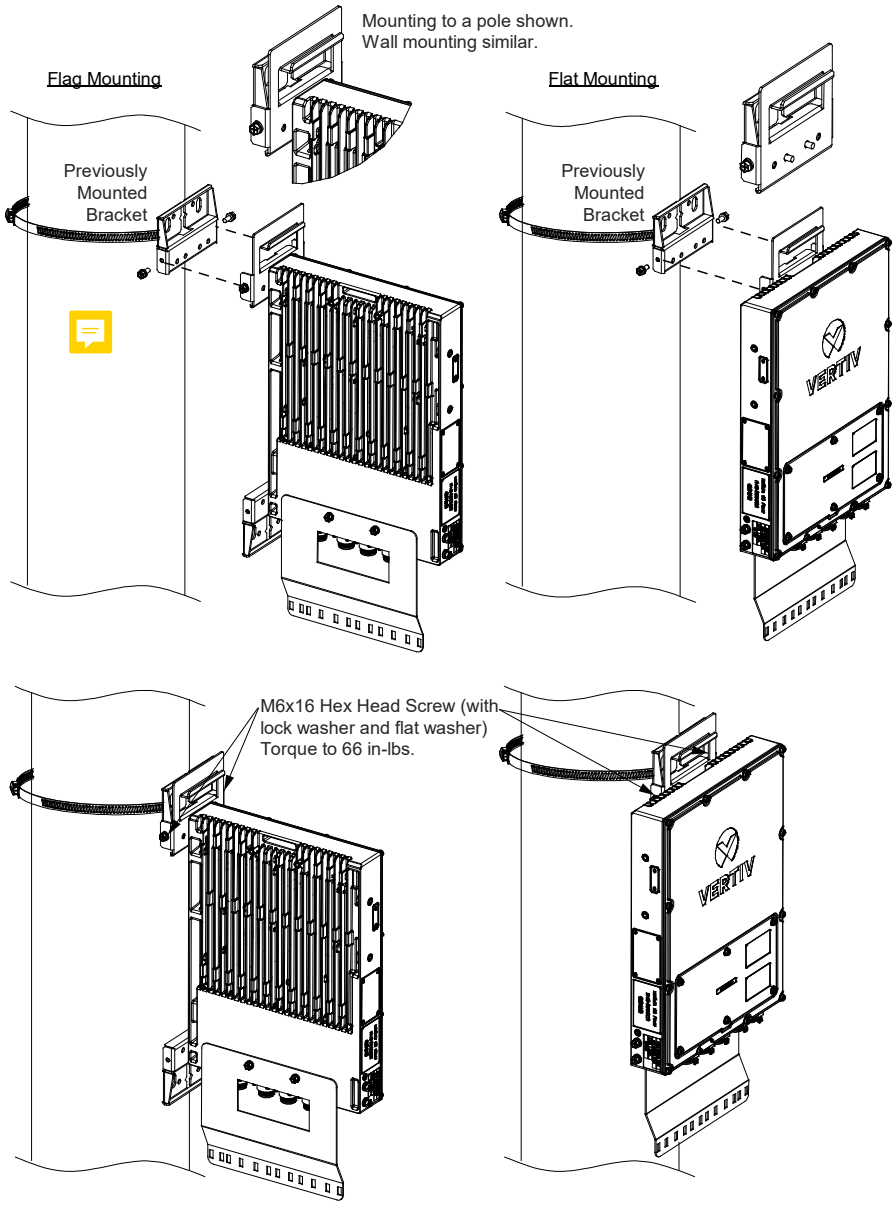

Preliminary (02/23/2022)

Figure 3.8 Securing the Rectifier to the Pole at the Bottom (Pole Mounting Shown, Wall Mounting Similar)

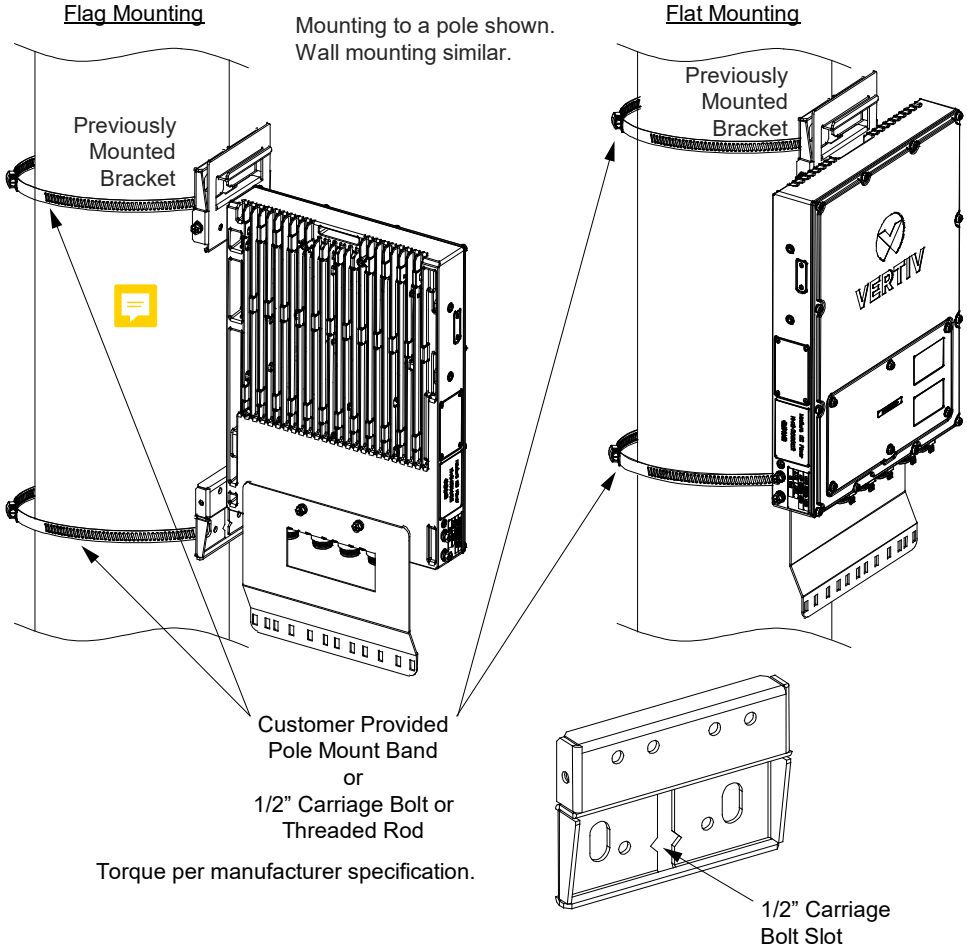

Preliminary (02/23/2022)

3.4.3 Wall Mounting Procedure (Without Using Rectifier Handle Bracket)

NOTE! *Torque all hardware to the values shown in the illustrations.*

1. Unpack the rectifier and mounting accessories.
2. Drill appropriately sized holes into the wall for installation of customer provided M10 wall anchors. See Figure 3.9 for dimensions.
3. Install the customer provided M10 wall anchors into the holes previously drilled.

Figure 3.9 Wall Mounting Anchor Hole Dimensions

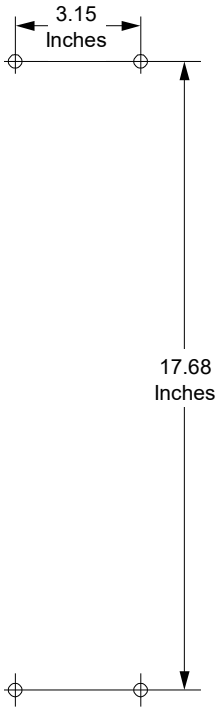

Preliminary (02/23/2022)

4. Install the rectifier mounting brackets to the rear panel of the rectifier using supplied hardware as shown in Figure 3.10. Install the strain relief plate to the rectifier using supplied hardware as shown in Figure 3.10. Note that the rectifier is to be mounted "flat".

Figure 3.10 Installing the Top and Bottom Mounting Brackets and Strain Relief Plate to the Rectifier (cont'd on next page)

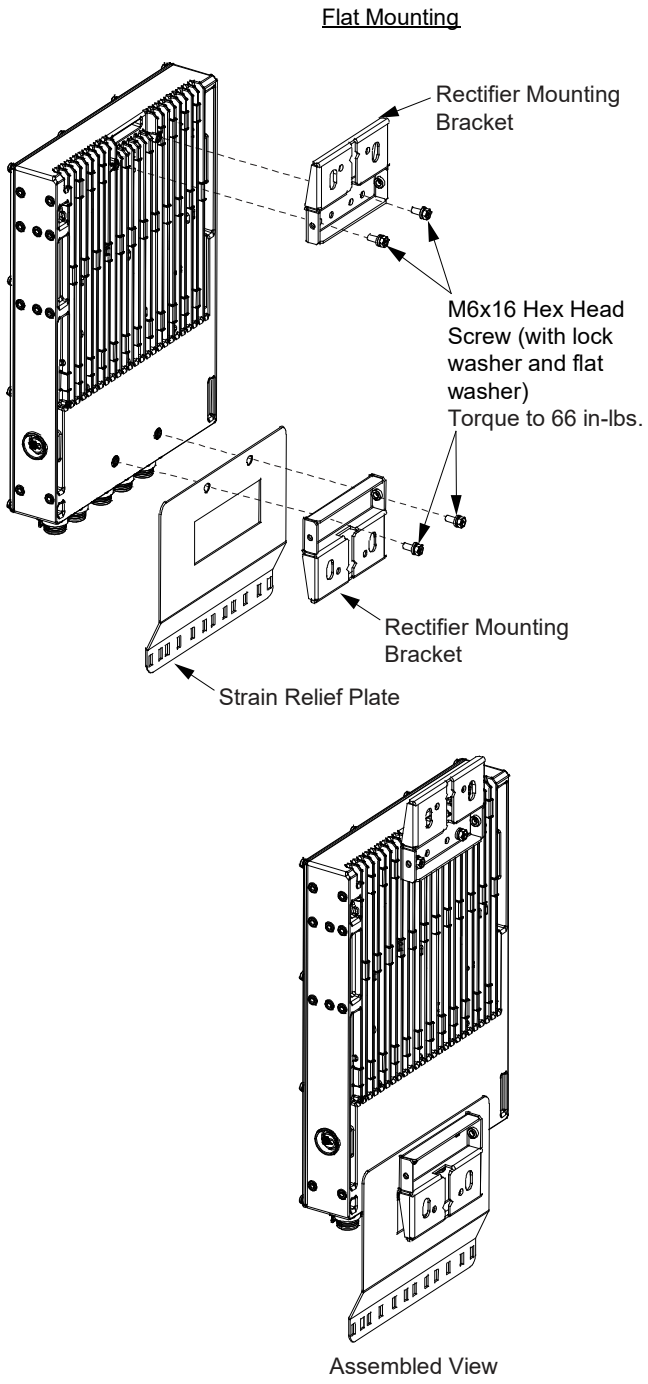

Preliminary (02/23/2022)

5. Secure the rectifier to the wall using the previously installed wall anchors. Refer to Figure 3.11. Torque per anchor manufacturer specifications.

Figure 3.11 Securing the Rectifier to the Wall

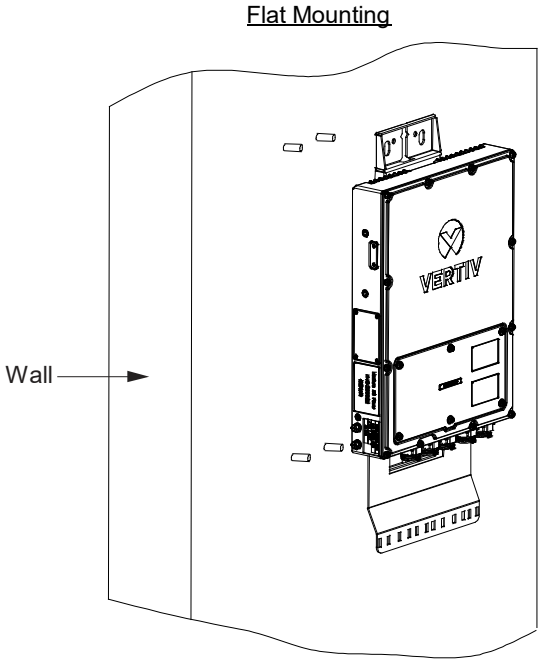

Preliminary (02/23/2022)

3.5 Mounting a Companion Lithium-Ion Battery to a Pole or Wall Using Battery Only Mounting Kit P/N 10025107

3.5.1 General

This kit allows a lithium-ion battery to be mounted to a pole or wall in a "flat" orientation. See "Companion Lithium-Ion Battery Only Mounting Kit P/N 10025107" on page 20.

- For pole mounting, the customer needs to supply either…
  - two (2) 1/2" diameter carriage bolts or threaded rods or,
  - two (2) pole mounting bands (3/4-inch wide, stainless steel, suitable for greater than 100 lbs of support, 0.030-inch thick).
- For wall mounting, the customer needs to supply four (4) M10 wall anchors capable of supporting the weight of the battery.
- Rectifier to battery inter-connect cables are suited for an installation distance of approximately 12-inches apart maximum, using the longer cables (1.25 meter length variant).

3.5.2 Pole / Wall Mounting Procedure

NOTE! *Torque all hardware to the values shown in the illustrations.*

1. Unpack the battery and mounting accessories.
2. Wall Mount: Drill appropriately sized holes into the wall for installation of customer provided M10 wall anchors. See Figure 3.12 for dimensions. Install the customer provided M10 wall anchors into the holes previously drilled.
3. Wall Mount: Install the battery mounting bracket to the wall using the previously installed wall anchors. See Figure 3.12. Torque per anchor manufacturer specifications.

   Pole Mount: Install the battery mounting bracket to the pole in the desired location. Install with either two (2) customer supplied 1/2" carriage bolts or threaded rods, or two (2) pole mount bands (see "3.5.1 General" on page 31). Refer to Figure 3.13. If using 1/2" carriage bolts or threaded rods, refer to Figure 3.13 and drill the two (2) appropriate holes in the pole.
4. Install the battery handle bracket to the rear panel of the battery using supplied hardware as shown in Figure 3.14. Note that the battery is to be mounted in a "flat" orientation.
5. Lift the battery up using the battery handle bracket (previously installed on the battery) and slide the battery handle bracket down into the battery mounting bracket (previously installed on the wall or pole). Note that there are tabs on the battery handle bracket that slide down into slots on the battery mounting bracket. Secure the battery handle bracket to the battery mounting bracket with the supplied hardware as shown in Figure 3.15.

Preliminary (02/23/2022)

Figure 3.12 Installing the Pole/Wall Battery Mounting Bracket to a Wall

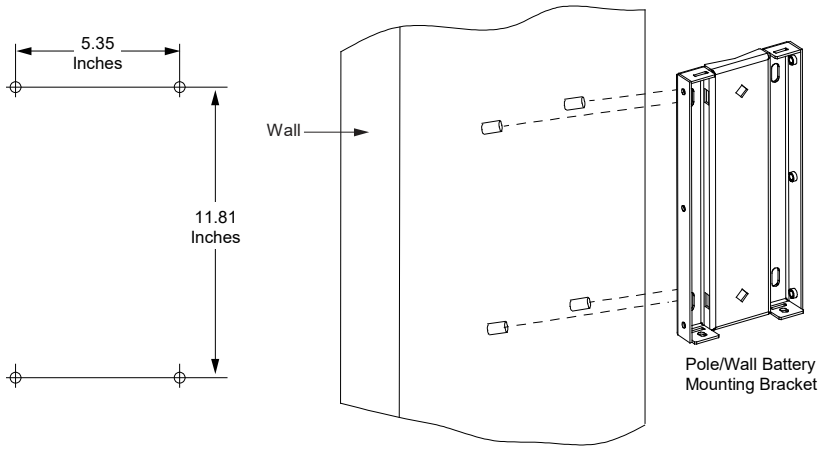

Figure 3.13 Installing the Pole/Wall Battery Mounting Bracket to a Pole

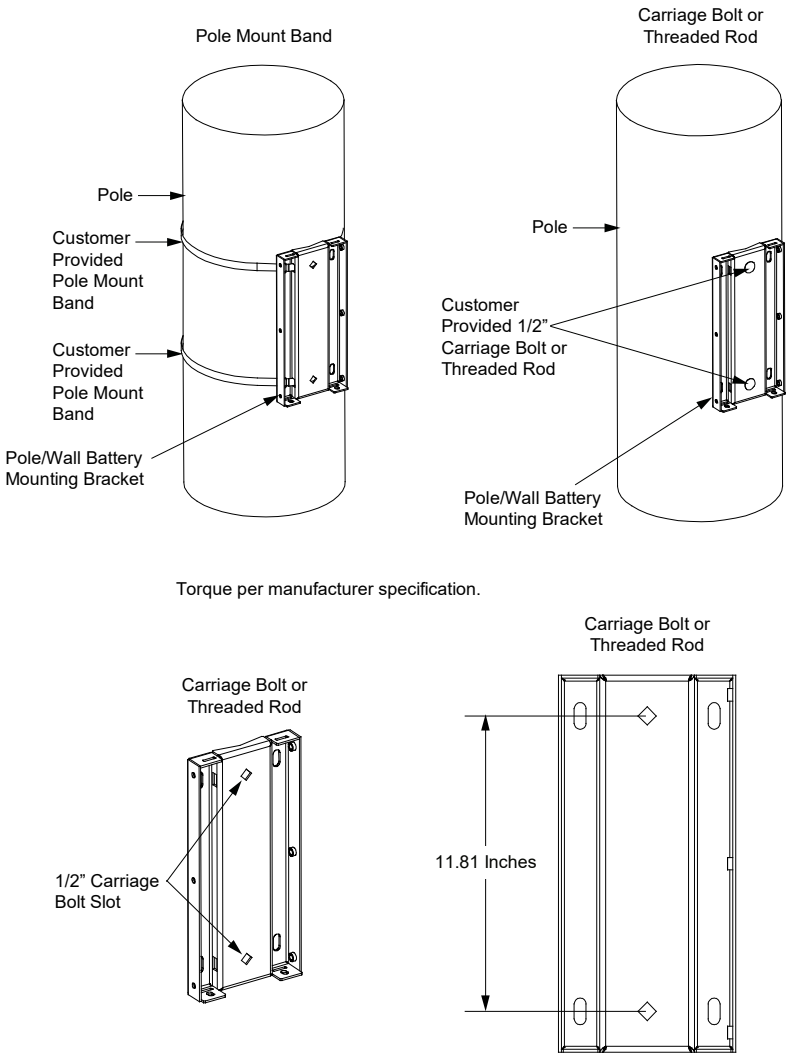

Preliminary (02/23/2022)

Figure 3.14 Installing the Battery Handle Bracket to the Battery

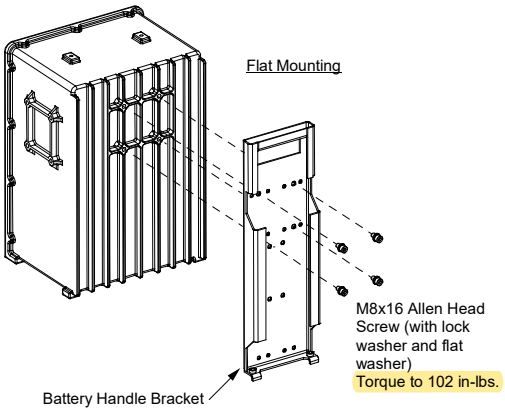

Figure 3.15 Securing the Battery Handle Bracket to the Pole/Wall Battery Mounting Bracket (cont'd on next page)

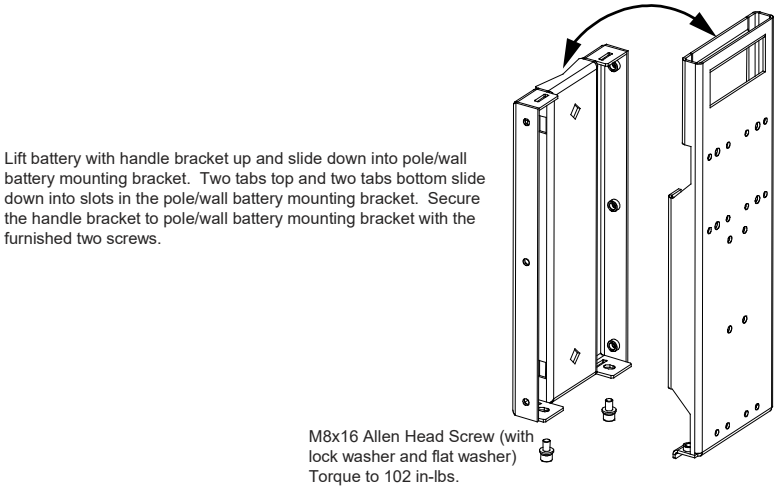

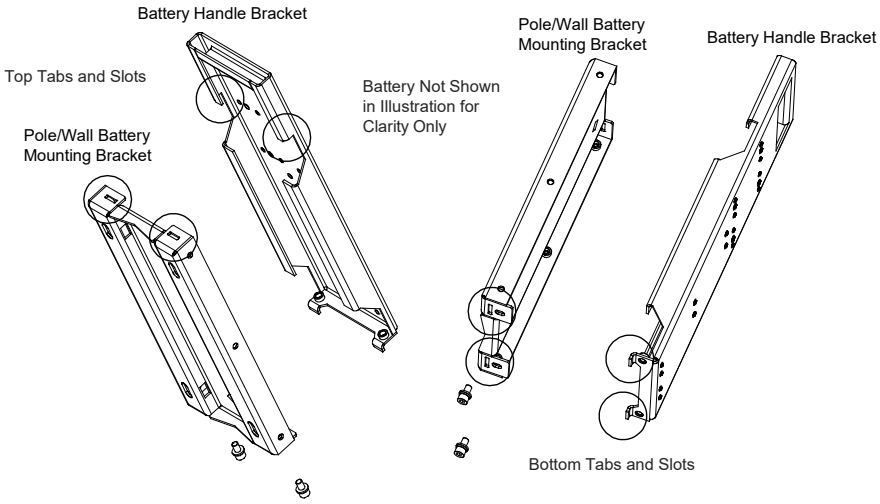

Preliminary (02/23/2022)

Figure 3.15 Securing the Battery Handle Bracket to the Pole/Wall Battery Mounting Bracket (cont'd from previous page)

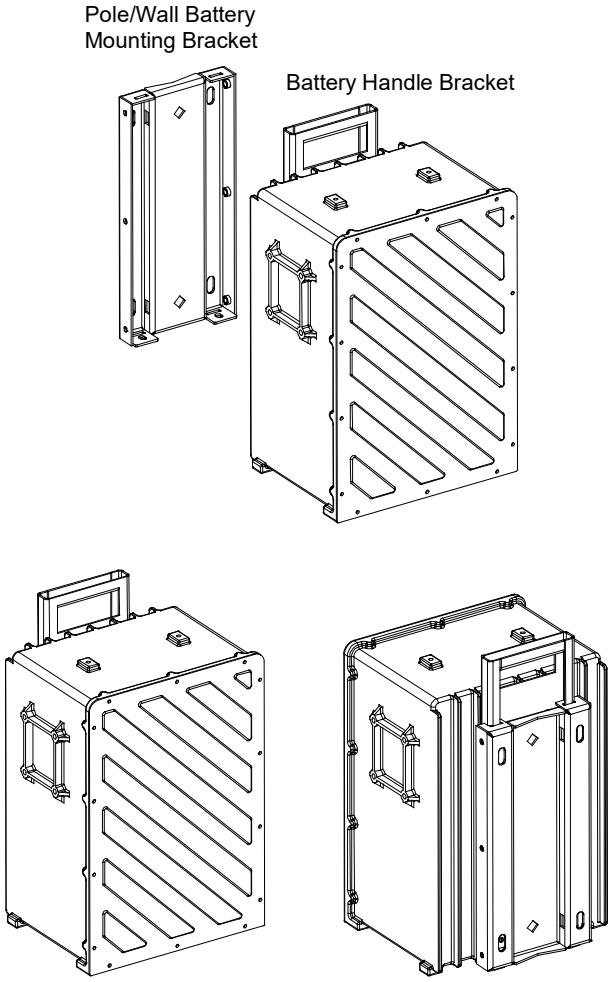

Preliminary (02/23/2022)

3.6 Mounting the Rectifier with a Companion Lithium-Ion Battery to a Pole Using Rectifier Add-On Kit P/N 10025108

3.6.1 General

This kit allows a rectifier and lithium-ion battery to be mounted to a pole in a "side-by-side flag" orientation. Requires both the rectifier only mounting kit P/N 10024600 furnished with each rectifier and the battery only mounting kit P/N 10025107. See "Rectifier Add-On Kit P/N 10025108" on page 21.

NOTE! *For this adjacent (short distance) installation, Vertiv recommends use of the shorter cable set of battery power cable (P/N 10023549) and RS-485 DB-9 communication cable (P/N 10023684).*

3.6.2 Pole Mounting Procedure

NOTE! *Torque all hardware to the values shown in the illustrations.*

1. Unpack the battery, rectifier, and mounting accessories.
2. Install the top rectifier mounting bracket to the rectifier add-on panel using supplied hardware as shown in Figure 3.16.
3. Install the rectifier handle bracket and rectifier mounting bracket to the side panel of the rectifier using supplied hardware as shown in Figure 3.17. Install the strain relief plate to the rectifier using supplied hardware as shown in Figure 3.17. Note that the rectifier can only be mounted in the "Flag" orientation.
4. Install the battery handle bracket to the side panel of the battery using supplied hardware as shown in Figure 3.18. Note that the battery can only be mounted in the "Flag" orientation.
5. Fasten the battery mounting bracket to the pole in the desired location. Install with either two (2) customer supplied 1/2" carriage bolts or threaded rods, or two (2) pole mount bands (see "3.6.1 General" on page 35). Refer to Figure 3.19. If using 1/2" carriage bolts or threaded rods, refer to Figure 3.19 and drill the two (2) appropriate holes in the pole.
6. Install the rectifier add-on panel with the top rectifier mounting bracket to the battery mounting bracket as shown in Figure 3.20.
7. Lift the rectifier up using the rectifier handle bracket (previously installed on the rectifier) and slide the rectifier handle bracket down into the rectifier mounting bracket (previously installed on the rectifier add-on panel). Note that there is a tab on the rectifier handle bracket that slides down into a slot on the rectifier mounting bracket installed on the rectifier add-on panel. Secure the rectifier handle bracket to the rectifier mounting bracket with the supplied hardware as shown in Figure 3.21.
8. Secure the bottom rectifier mounting bracket previously installed on the rectifier to the rectifier add-on panel with supplied hardware as shown in Figure 3.21.
9. Lift the battery up using the battery handle bracket (previously installed on the battery) and slide the battery handle bracket down into the battery mounting bracket (previously installed on the pole). Note that there are tabs on the battery handle bracket that slide down into slots on the battery mounting bracket. Secure the battery handle bracket to the battery mounting bracket with the supplied hardware as shown in Figure 3.22.
10. Secure the battery link plate to the battery and rectifier with the supplied hardware as shown in Figure 3.23.

Preliminary (02/23/2022)

Figure 3.16 Installing the Rectifier Mounting Bracket to the Rectifier Add-On Panel

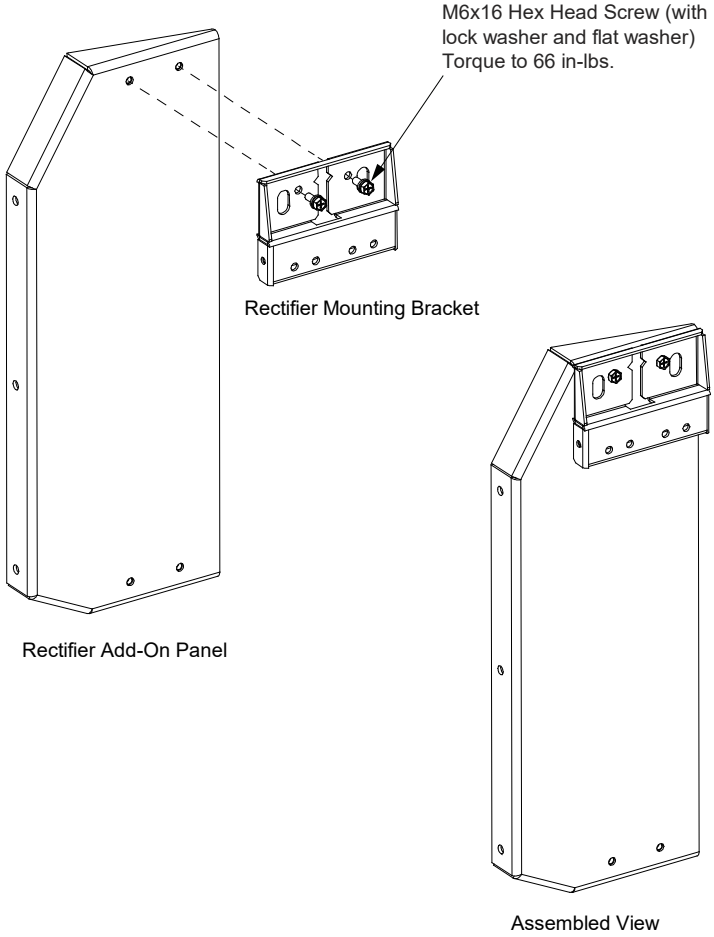

Preliminary (02/23/2022)

Figure 3.17 Installing the Top Rectifier Handle Bracket, Bottom Rectifier Mounting Bracket, and Strain Relief Plate to the Rectifier

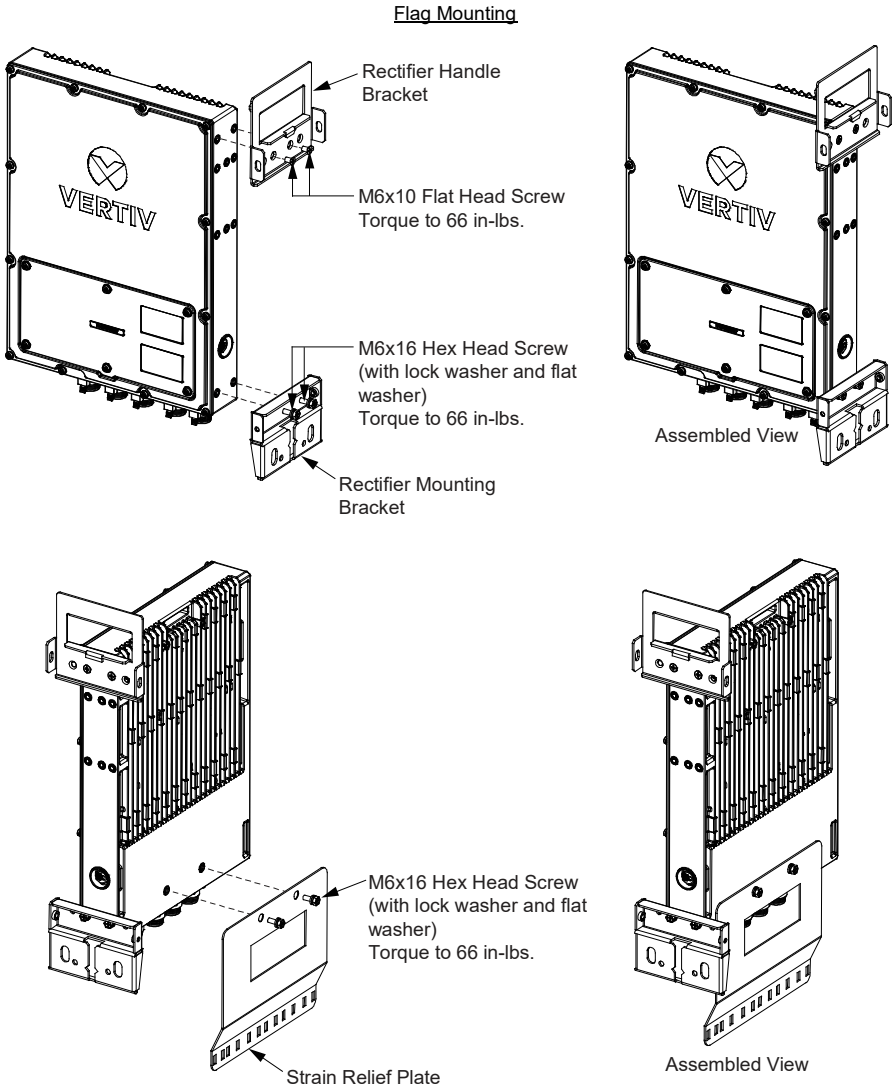

Preliminary (02/23/2022)

Figure 3.18 Installing the Battery Handle Bracket to the Battery

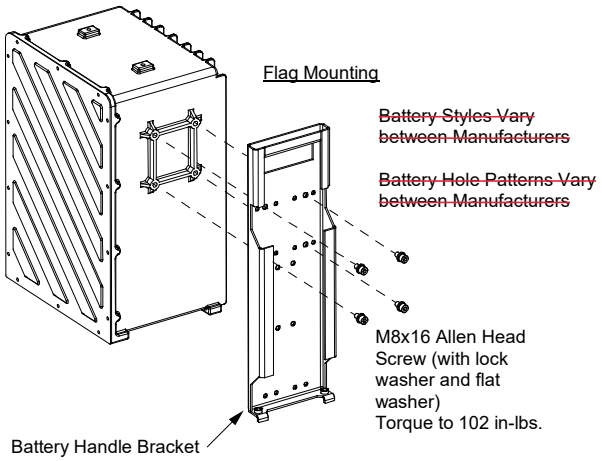

Figure 3.19 Fastening the Battery Mounting Bracket to the Pole

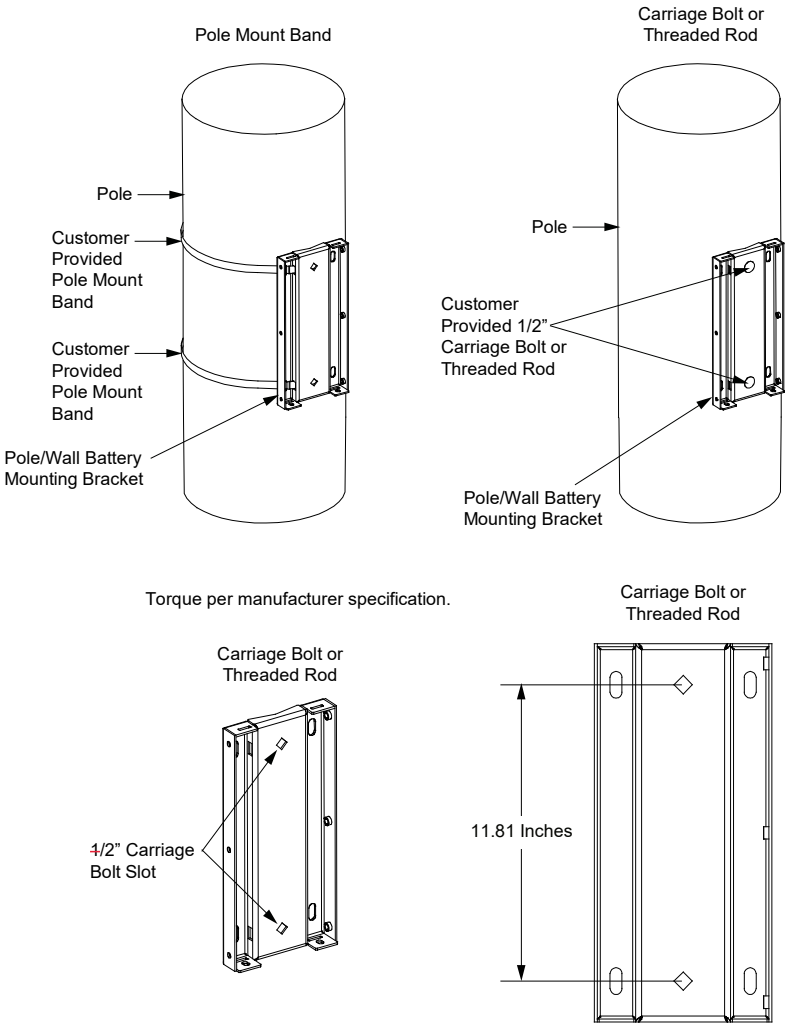

Preliminary (02/23/2022)
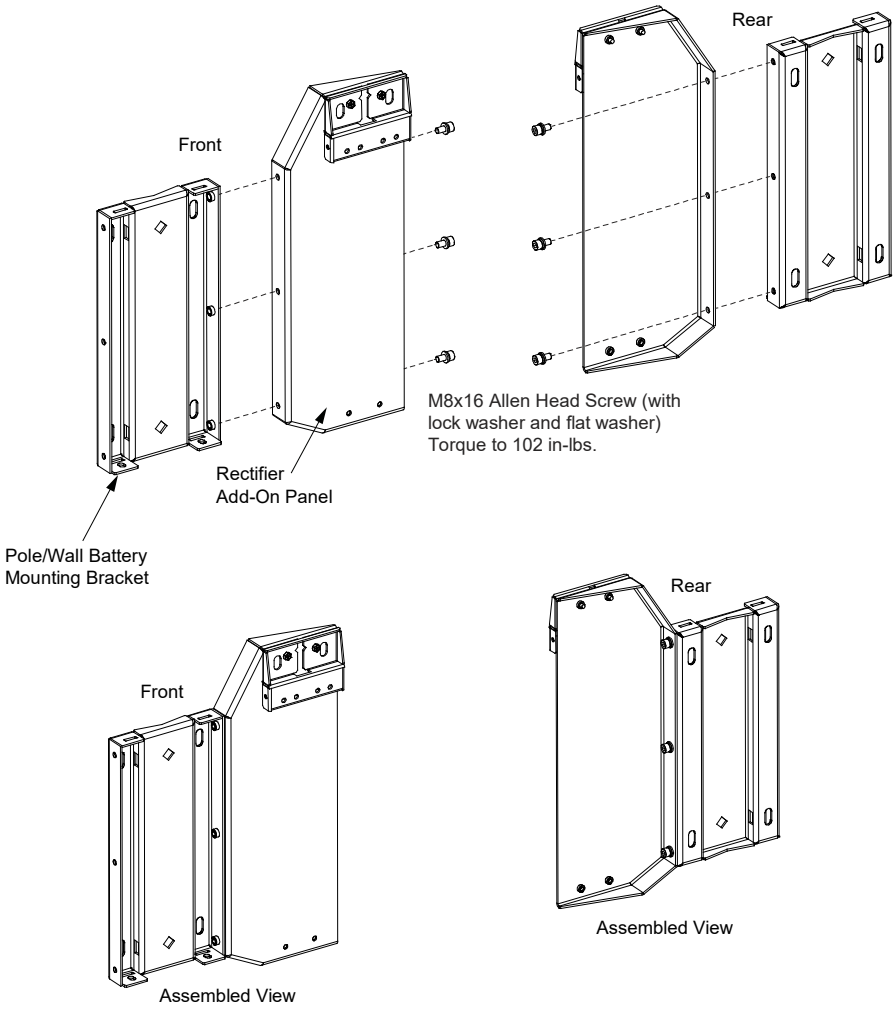
Figure 3.20 Installing the Rectifier Add-On Panel with the Top Rectifier Mounting Bracket to the Battery Mounting Bracket