TES
2’nd Simulate Report WiFi antenna of FCD-215 CBR RevA

2022.07.25 / Raymond Wang

EVERY CONNECTION COUNTS

Building 2, Lane 270, Section 3, Beishen Road, Shenkeng District, Xinbei City, Taiwan.

TEST DETAILS AND SPEC

TE Engineering Location, Engineer	Taiwan, Raymond Wang
Customer Equipment Name	TES
Bands / Frequencies	Band: WiFi F [MHz]: 2400-2500, 5150-5875
Requirements or Targets	Target:
Test Equipment	CST
Test Report Type	Preliminary
Antennas	2234654 -0/-9
Task	Simulate for currently placement
Antenna Gain (Peak)	< 1dBi

© 2020 TE Connectivity. Confidential & Proprietary. Do not reproduce or distribute externally including non-authorized representatives and distributors. Create a sustainable future by limiting print copies, and recycling paper.

FCD-215 CBR

Simulate the antenna performance for currently placement

EVERY CONNECTION COUNTS

Picture for Antenna Position

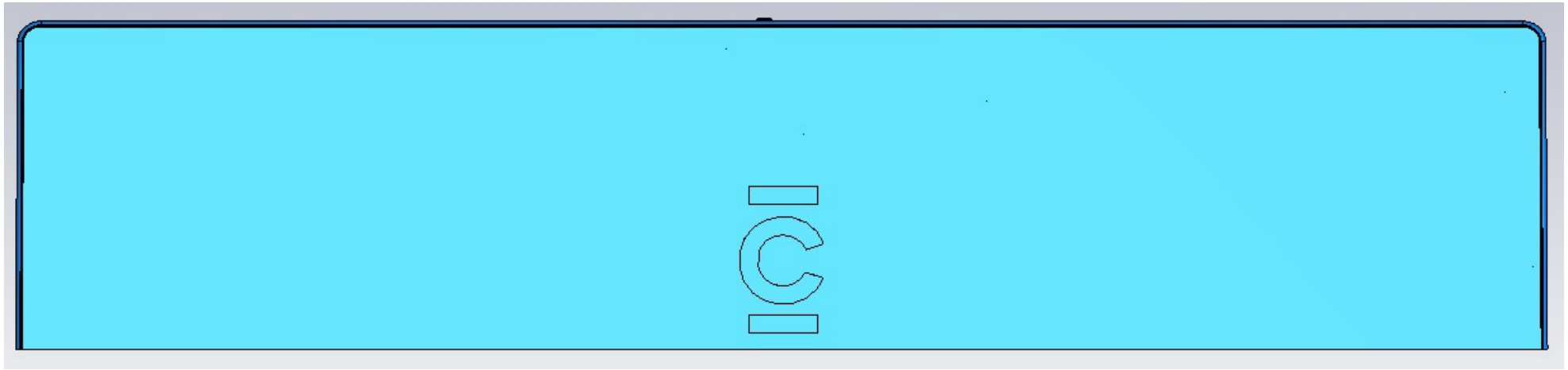

Antenna Position

© 2020 TE Connectivity. Confidential & Proprietary. Do not reproduce or distribute externally including non-authorized representatives and distributors. Create a sustainable future by limiting print copies, and recycling paper.

Picture for Antenna Position

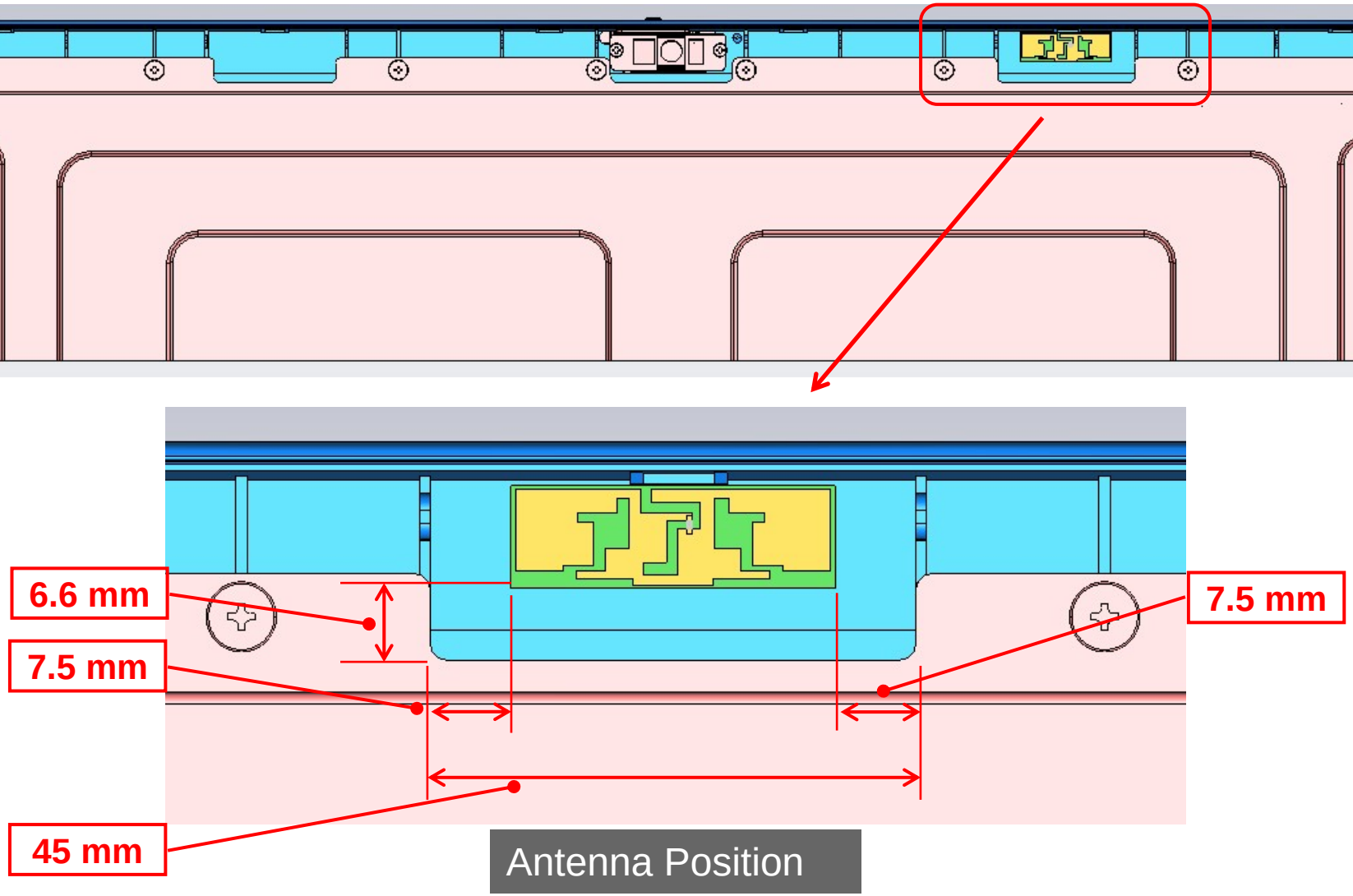

© 2020 TE Connectivity. Confidential & Proprietary. Do not reproduce or distribute externally including non-authorized representatives and distributors. Create a sustainable future by limiting print copies, and recycling paper.

Return Loss

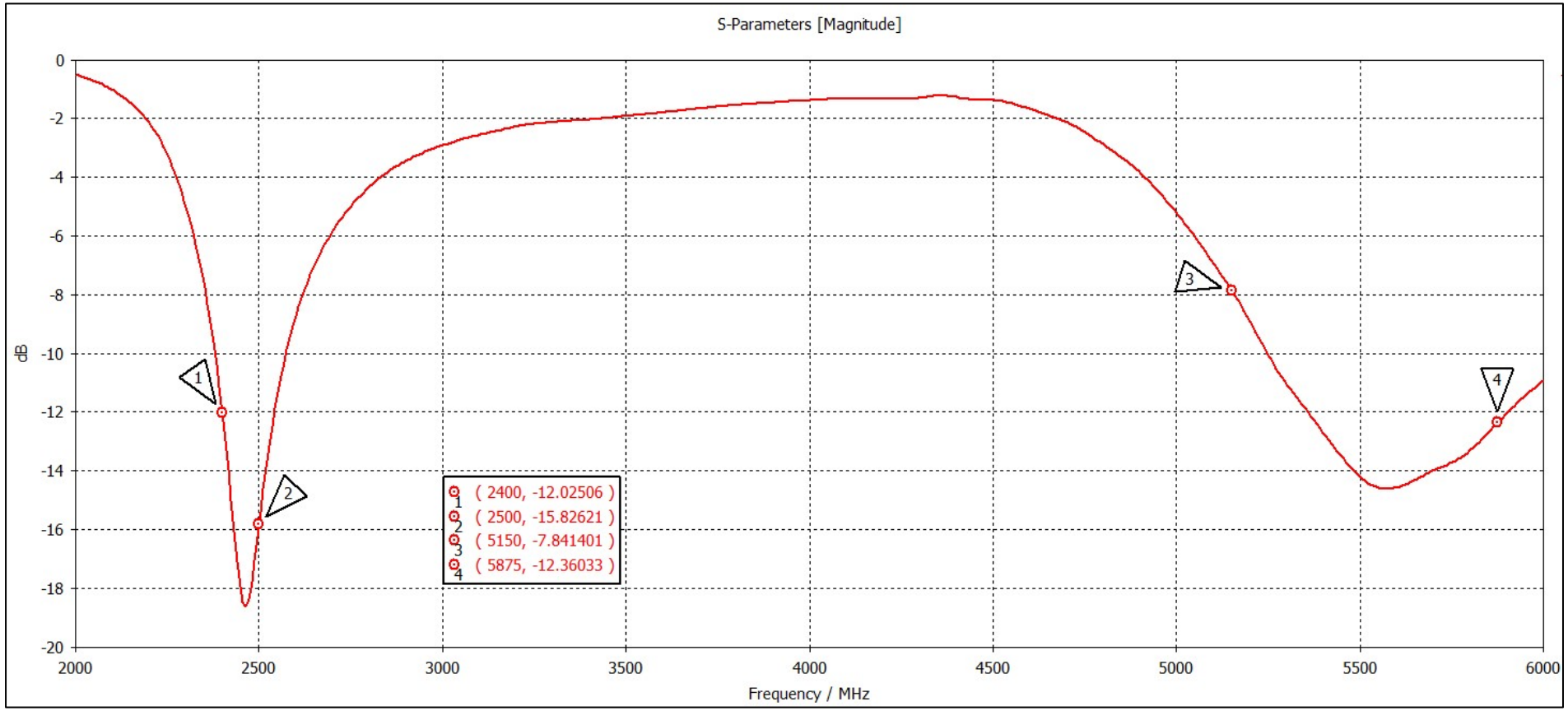

© 2020 TE Connectivity. Confidential & Proprietary. Do not reproduce or distribute externally including non-authorized representatives and distributors. Create a sustainable future by limiting print copies, and recycling paper.

Average Gain

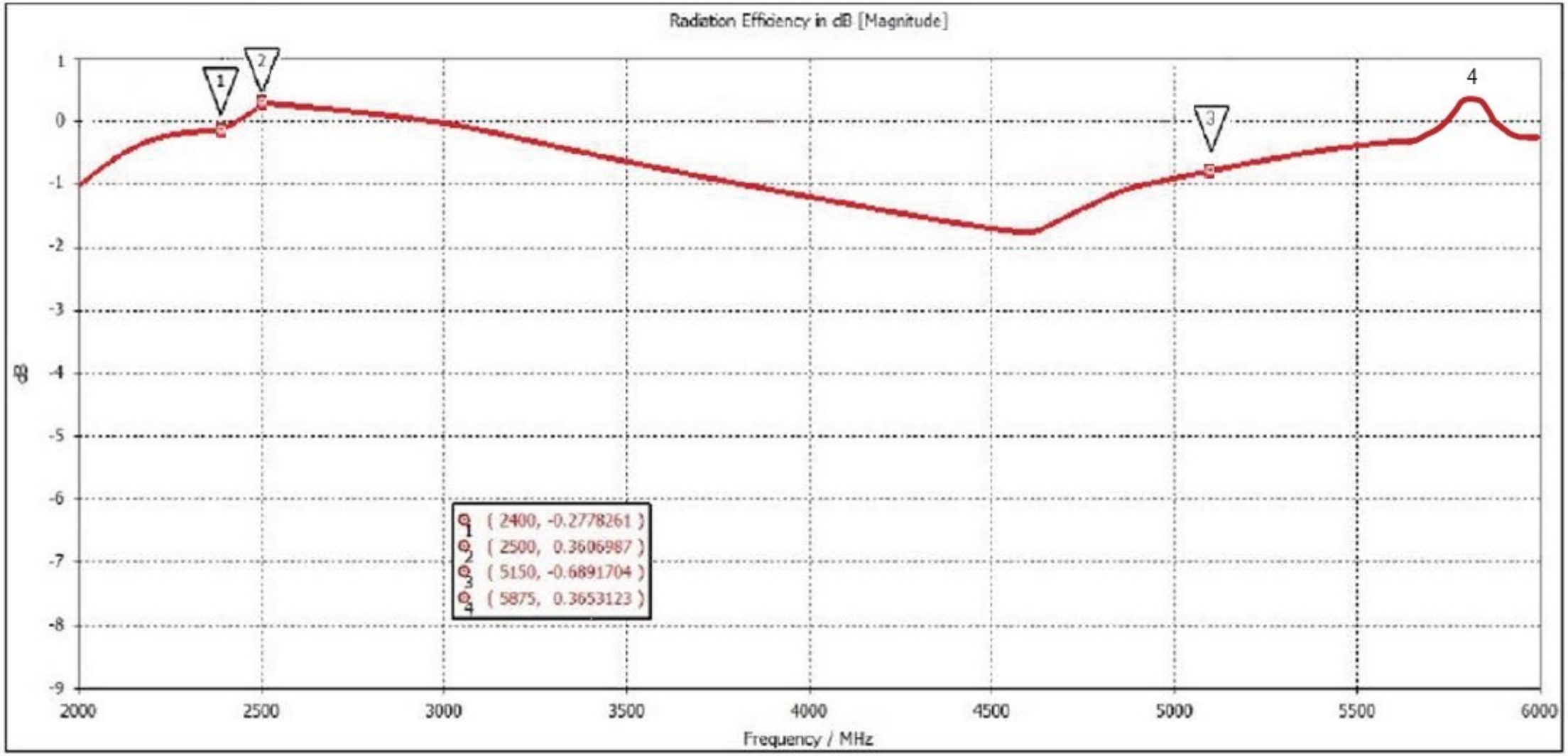

© 2020 TE Connectivity. Confidential & Proprietary. Do not reproduce or distribute externally including non-authorized representatives and distributors. Create a sustainable future by limiting print copies, and recycling paper.

2D Radiation for 2450MHz

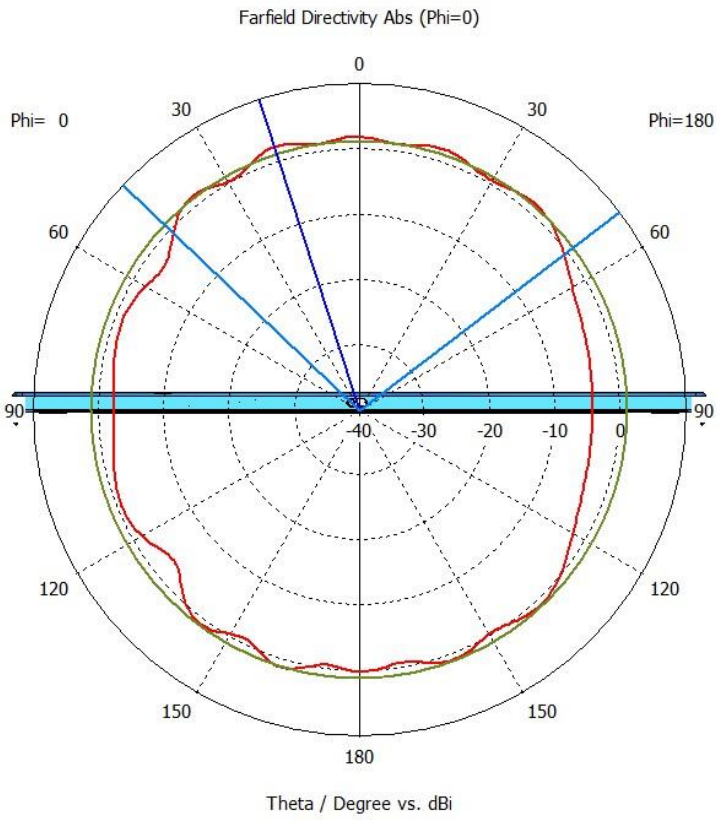

Phi 0

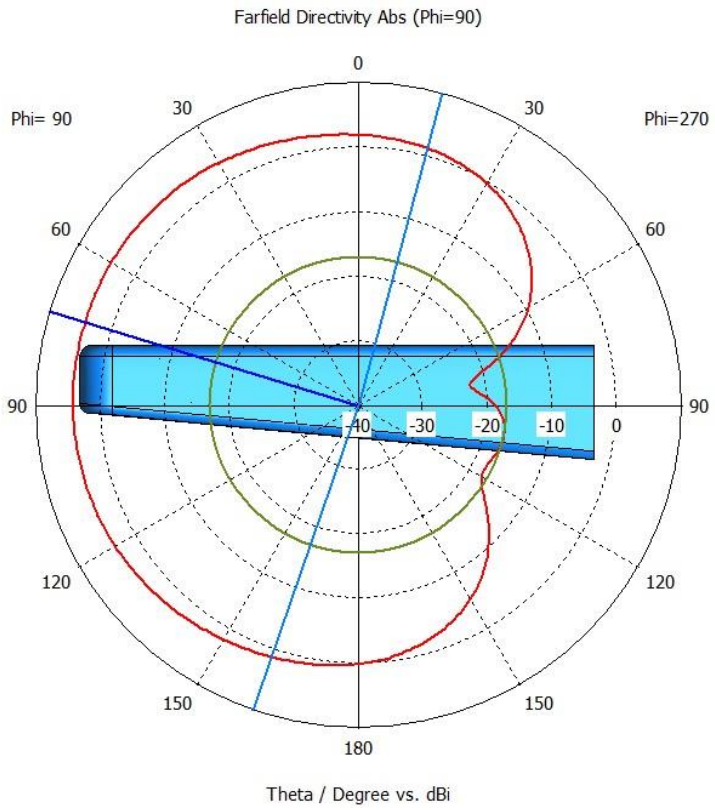

Phi 90

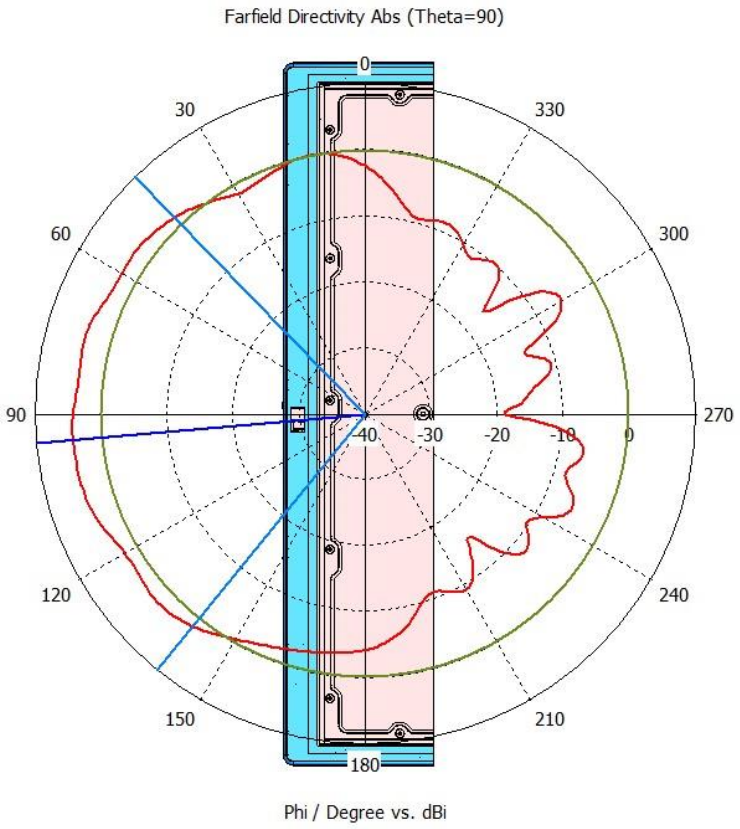

Theta 90

© 2020 TE Connectivity. Confidential & Proprietary. Do not reproduce or distribute externally including non-authorized representatives and distributors. Create a sustainable future by limiting print copies, and recycling paper.

2D Radiation for 5470MHz

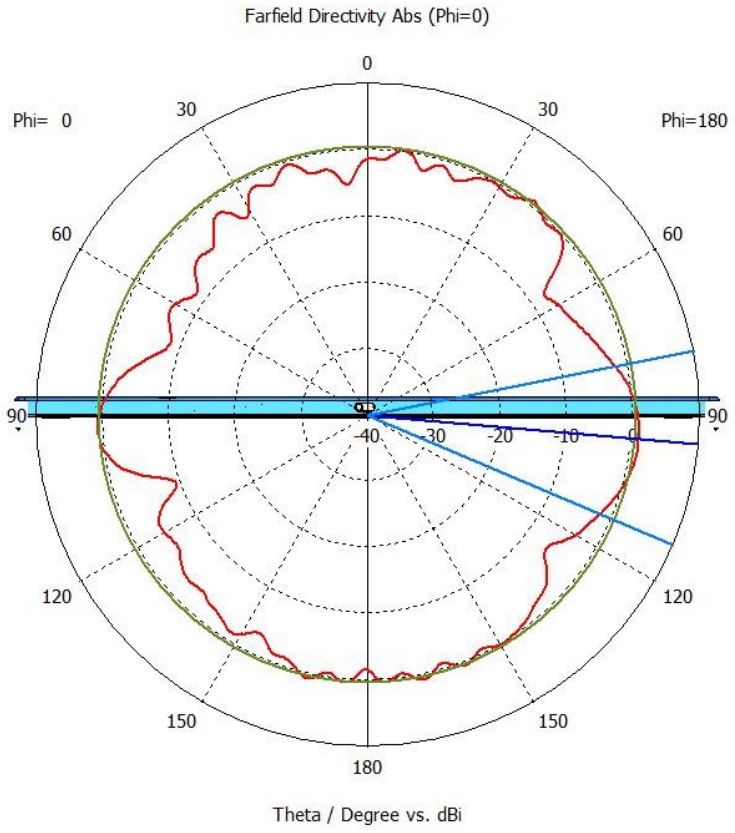

Phi 0

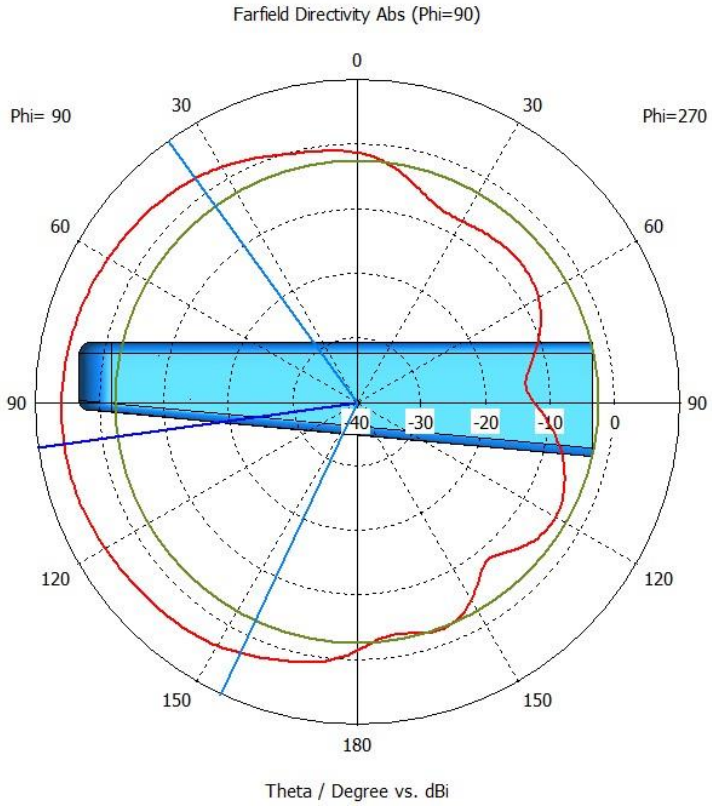

Phi 90

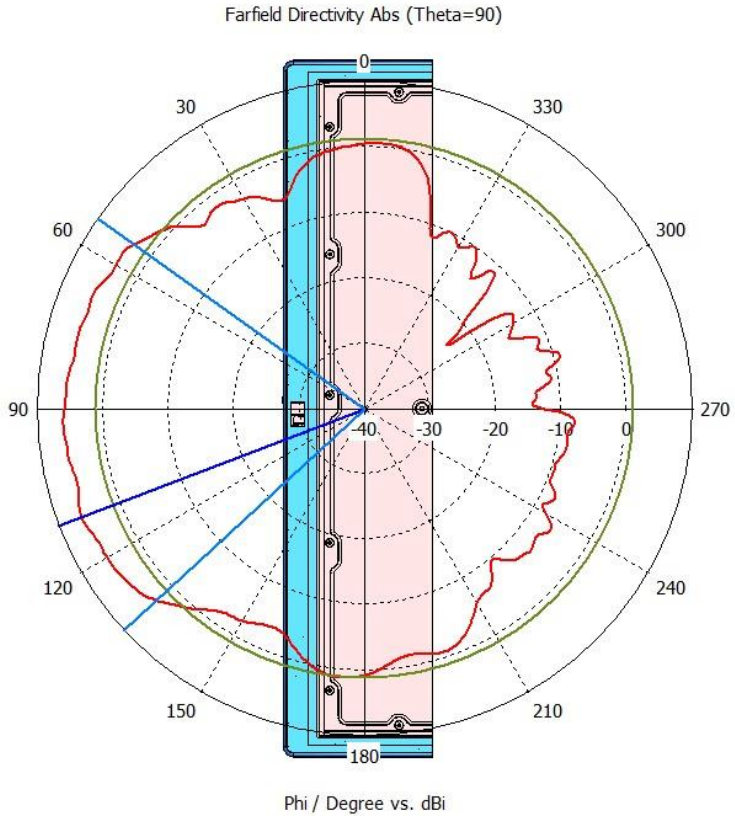

Theta 90

© 2020 TE Connectivity. Confidential & Proprietary. Do not reproduce or distribute externally including non-authorized representatives and distributors. Create a sustainable future by limiting print copies, and recycling paper.

TEST RESULT / CONCLUSION

For the currently placement, the average gain of simulation result is better than -1dBi by CST. The performance of antenna without the antenna cable.

The simulation results shown that the below antenna propose keep out area can provide good antenna performance.

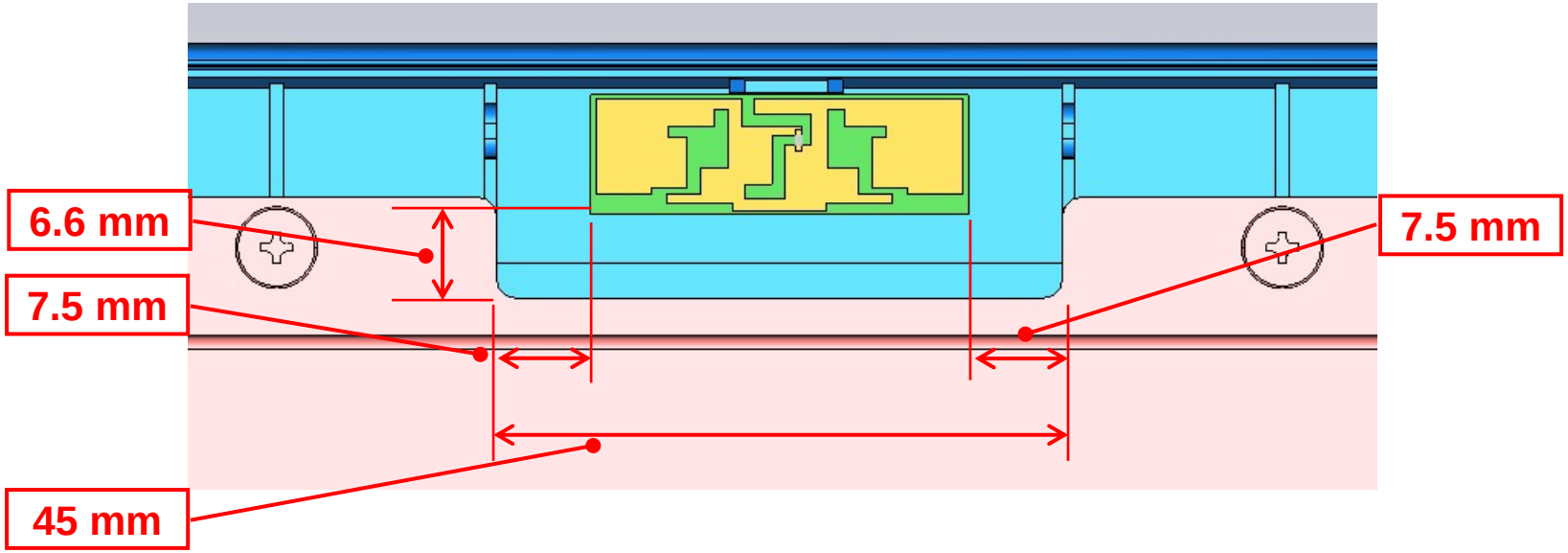

© 2020 TE Connectivity. Confidential & Proprietary. Do not reproduce or distribute externally including non-authorized representatives and distributors. Create a sustainable future by limiting print copies, and recycling paper.

WHEN TECHNOLOGY CONNECTS, SO DOES HUMANITY.

EVERY CONNECTION COUNTS

TE connectivity