Owner's manual

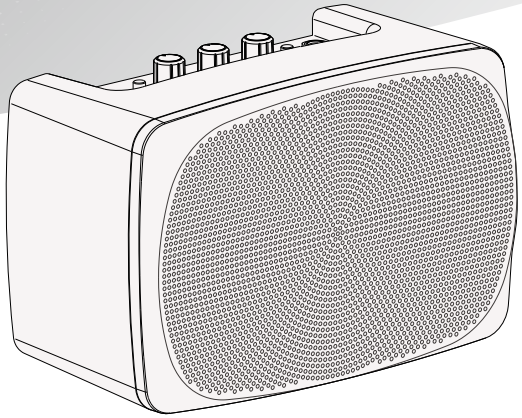

YS-10A
YS-10B
YS-10E

AMP

10WATT

Thank you for purchasing this product!

In order to use this product properly and safely, please read this owner's manual carefully before operating this product and keep it for future reference.

Safety instructions

1. Please make sure the On/Off switch is set to OFF position if the product is not in use.
2. Before use, you must confirm that the adapter is connected to the DC9V input interface, and please use the adapter of the device, the wrong input interface may cause damage to the device.
3. Please use AA batteries, please put the batteries in the battery compartment according to the polarity.

Detailed safety instructions

1. It can only be used within the voltage and current range of this power supply.
2. Don't use it in the rain, near water or damp areas, don' t drop water or other liquid substance into this product.
3. Make sure there is no paper, plastic, metal or other solid object that falls into any of the ventilation openings.
4. Do not collide, throw or vibrate this product.
5. Clean only with a clean dry cloth. Don't use inflammable substances such as benzene, thinner, detergent and so on.
6. Do not open the case for any reason, please switch it off and contact professional maintenance men if it malfunctions, and this product doesn't contain any spare parts for users to do-it-yourself.
7. Don't dump this product with household garbage. Proper treatment can reduce pollution and health hazards. Please contact your local dealer for correct approaches.
8. This product is produced according to strict product specifications, and is supposed to be used in specific areas. If you purchase it online, by mail order or telephone sales, please verify your area is authorized to use this product. It's dangerous to use this product in any unqualified area and you will no longer enjoy the factory warranty. Besides, please keep your invoice as proof of purchase for after-sales service.

Features

YS series is specially designed for different instruments , including 3 multifunctional amps for 3 instruments , that is , YS-10A amp for acoustic-electric guitar , YS-10B for electric bass and YS-10E for electric guitar.

YS series features a Gain control knob , Tone control knob and one channel or tone mode switch , ensuring different instruments can adjust the one comprehensively . You can also install the batteries first and use YS series in the open air. As YS series is compact and portable , With Bluetooth function and aux input access,which guarantees pleasant enjoyment out of music while playing your instruments. YS series meets all your expression needs no matter you own guitar , acoustic-electric guitar or electric bass.

Parts'names and functions

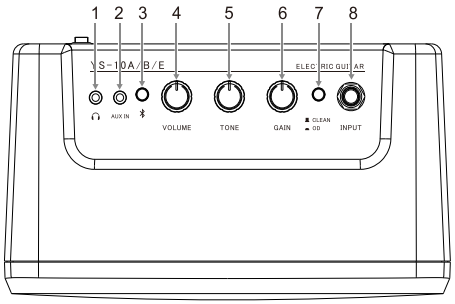

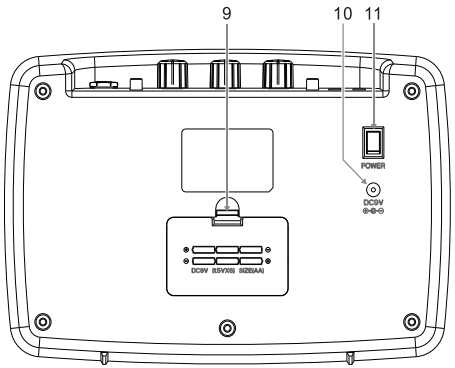

1. **Headphone Output Jack:** it's a 3.5mm stereo output jack, the loudspeaker mutes automatically when it connects to the headphones.
2. **AUX In Jack :** you can use an audio cable to connect with the Aux In Jack for playing accompaniment and enjoying music.
3. **Bluetooth switch:** Turn on/off the Bluetooth function. When the Bluetooth function is turned on, the Bluetooth indicator lights up in blue, the connection is successful, and it stays on, and it flashes slowly when it is not connected or disconnected.
4. **Master volume knob:** turn it clockwise , the volume will be turned up , turn it counterclockwise , the volume will be turned down.
5. **Bright knob :** turn it clockwise , the bright will be turned up , turn it counterclockwise , the bright will be turned down.
6. **Gain control knob:** turn it clockwise , the Gain will be turned up , turn it counterclockwise , the Gain will be turned down.
7. ■ [YS-10A] ---BRIGHT / NORMAL Channel Switch: this switch is the select switch for the BRIGHT and NORMAL Channels . its default Channel is NORMAL when the NORMAL Channel is chosen , the tone of the acoustic-electric guitar can be recovered , and you can increase the high frequency and brightness when you switch it to Bright Channel.
   ■ [YS-10B] ---DRIVE / NORMAL Channel Switch : this switch is the select switch for the DRIVE and NORMAL Channels , its default Channel is NORMAL , when the NORMAL Channel is chosen . the tone of the electric bass can be recovered , and you can obtain a warm overdrive tone when you switch it to Drive Channel.
   ■ [YS-10E]---OD / CLEAN Channel Switch : this switch is the select switch for the OD and CLEAN Channels , its default Channel is CLEAN , when the CLEAN Channel is chosen , the tone of the electric guitar can be recovered , and you can obtain hard Distortion tone when you switch it to OD.
   ■ Power indicator : the power indicator becomes red when the power switch is switched on.
8. **Input Jack:** it s a 6 . 35mm unbalanced Input Jack , use a music instrument cable to connect your instruments (YS-10 A : acoustic-electric guitar / YS-10B bass / YS-10E electric guitar) to it.
9. **Battery compartment:** Please use AA batteries (six) in the battery compartment for use.
10. **Power Input :** use the attached power adapter and connect it to the power Input Jack , this Jack is DC 9V center minus.
11. **Power switch:** it starts to work once the power switch is turned on , please turn it off when not in use.

How to connect

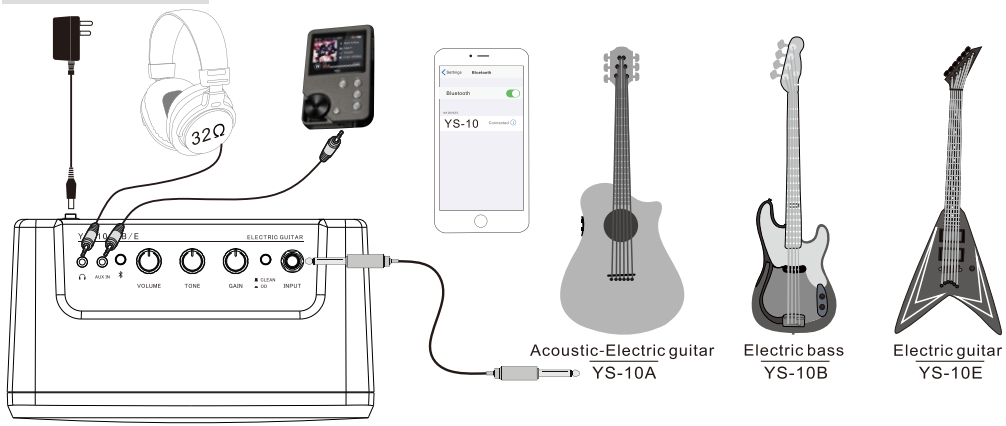

Packing list

YS-10: x1 (dimensions:L220xW123xH150mm , weight:900g)
Power adapter:x1(DC9V/1.2A)
Owner's manual: x1

CE FC

MADE IN CHINA

FCC Statement

This equipment has been tested and found to comply with the limits for a Class B digital device, pursuant to part 15 of the FCC Rules. These limits are designed to provide reasonable protection against harmful interference in a residential installation. This equipment generates, uses and can radiate radio frequency energy and, if not installed and used in accordance with the instructions, may cause harmful interference to radio communications. However, there is no guarantee that interference will not occur in a particular installation. If this equipment does cause harmful interference to radio or television reception, which can be determined by turning the equipment off and on, the user is encouraged to try to correct the interference by one or more of the following measures:

- Reorient or relocate the receiving antenna.
- Increase the separation between the equipment and receiver.
- Connect the equipment into an outlet on a circuit different from that to which the receiver is connected.
- Consult the dealer or an experienced radio/TV technician for help.

Caution: Any changes or modifications to this device not explicitly approved by manufacturer could void your authority to operate this equipment.

This device complies with part 15 of the FCC Rules. Operation is subject to the following two conditions: (1) This device may not cause harmful interference, and (2) this device must accept any interference received, including interference that may cause undesired operation.

RF Exposure Information

This equipment complies with FCC radiation exposure limits set forth for an uncontrolled environment. This equipment should be installed and operated with minimum distance 20cm between the radiator and your body.