FHD LCD PROJECTOR

USER MANUAL

LED SOURCE

ANXONIT

INFINITE S1

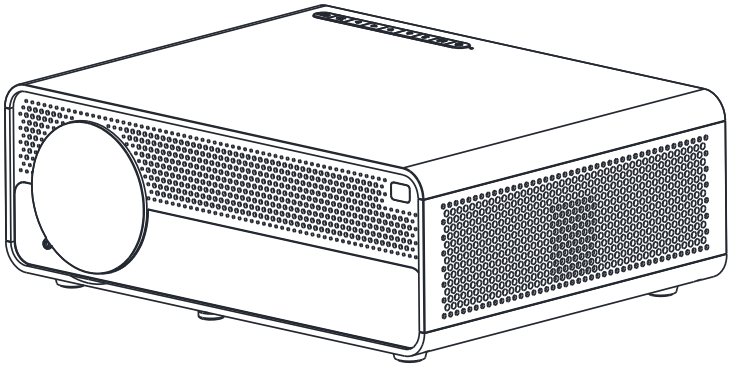

@2021-2022 Anxonit Inc all right reserved
The ANXONIT logo and associated characters, trademarks
& design elements are owned and licensed by Anxonit company.
https://www.anxonit.com

First of all, thank you for your choosing!

The instructions of this manual are for you reference about the product.There maybe differences due to updates,Please check manufacturer's website to obtain the latest version of the instruction manual.

⚠ *WARNING*

Please do not open the case in order to prevent electric shock. Customers cannot repair parts of inside device. Please contact professional maintenance staff to repair it.

CHARACTERISTICS

1. With this FHD home theater projector, you can enjoy movies, sports, videos, pictures and more, like if you were watching a 300 inches dynamic image.

2. You can use AV/HDMI/USB/ VGA with different devices.

3. The products have built-in speakers to match daily needs, You can also connect an external speaker or headset through a 3.5mm audio interface.

4. The product adopts LED as the light source, The LED light used is up to 30,000 hours.

5. LED projector is best for home video and entertainment. Video playback should not be in bright light environments.

Not recommend the projector for Word or spreadsheet. This is not suitable for use in the education domain, video playback is the main function.

PARTS AND FUNCTIONS OF PROJECTOR

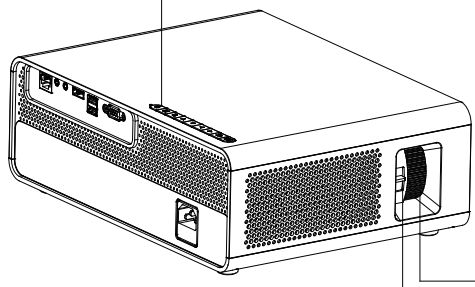

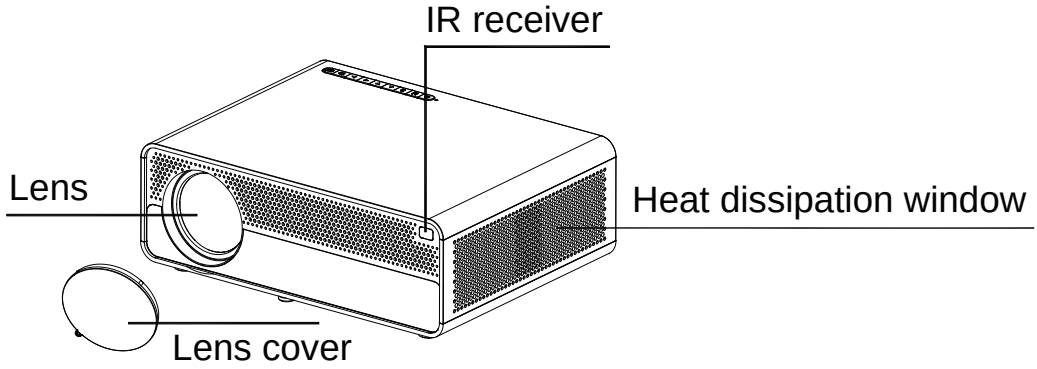

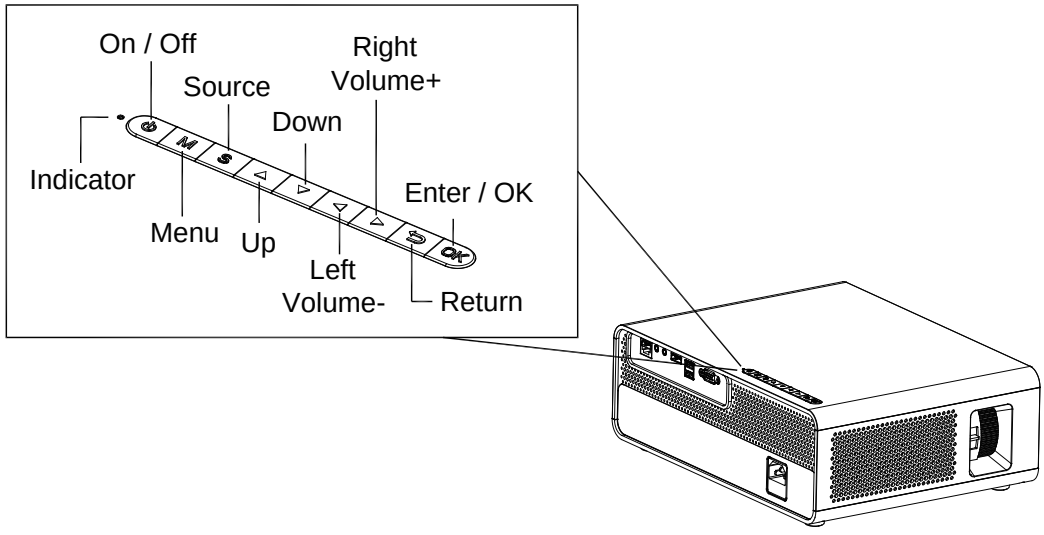

PARTS AND FUNCTIONS OF PROJECTOR

(Basic version)

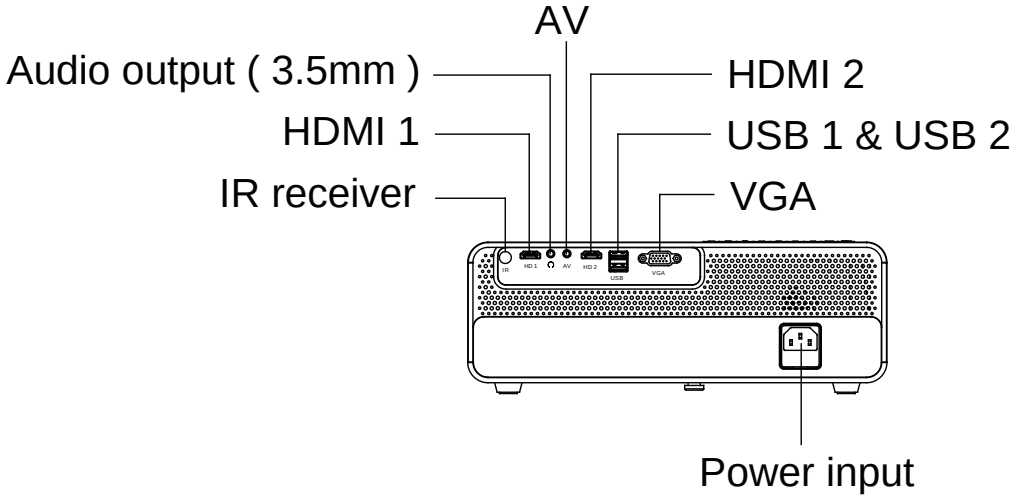

(Android version)

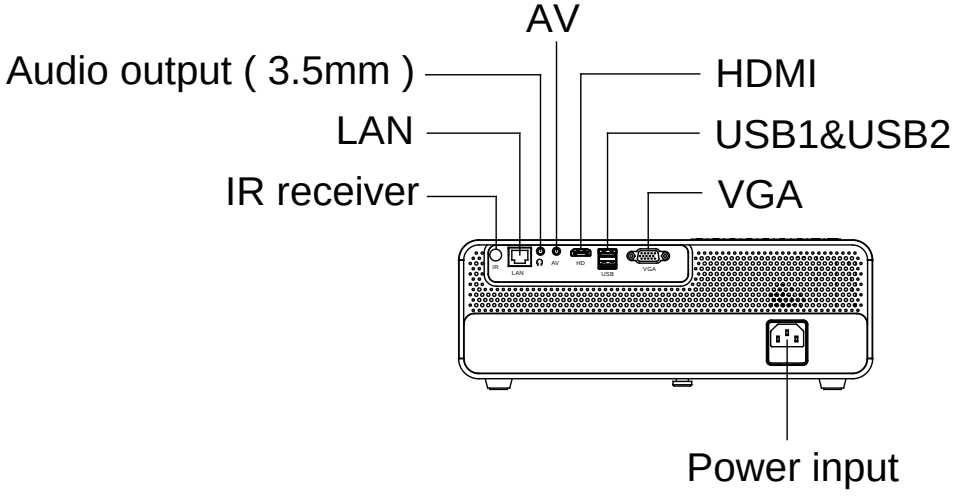

PARTS AND FUNCTIONS OF PROJECTOR

Introduction Of Keyboard (Basic version)

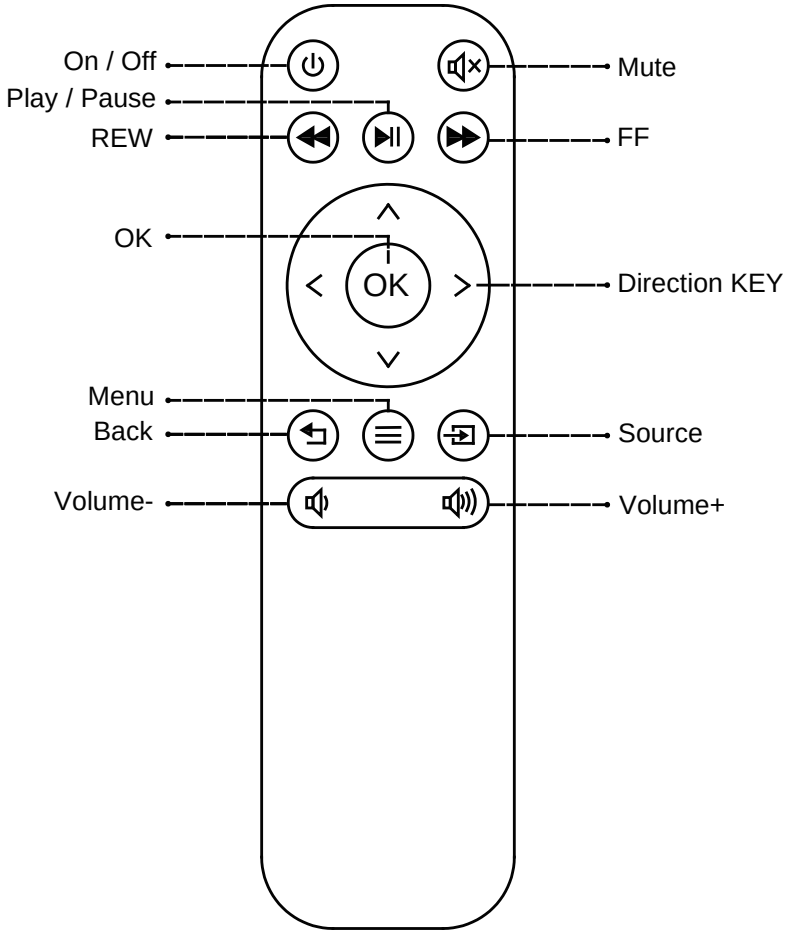

PARTS AND FUNCTIONS OF PROJECTOR

Introduction Of Keyboard (Android version)

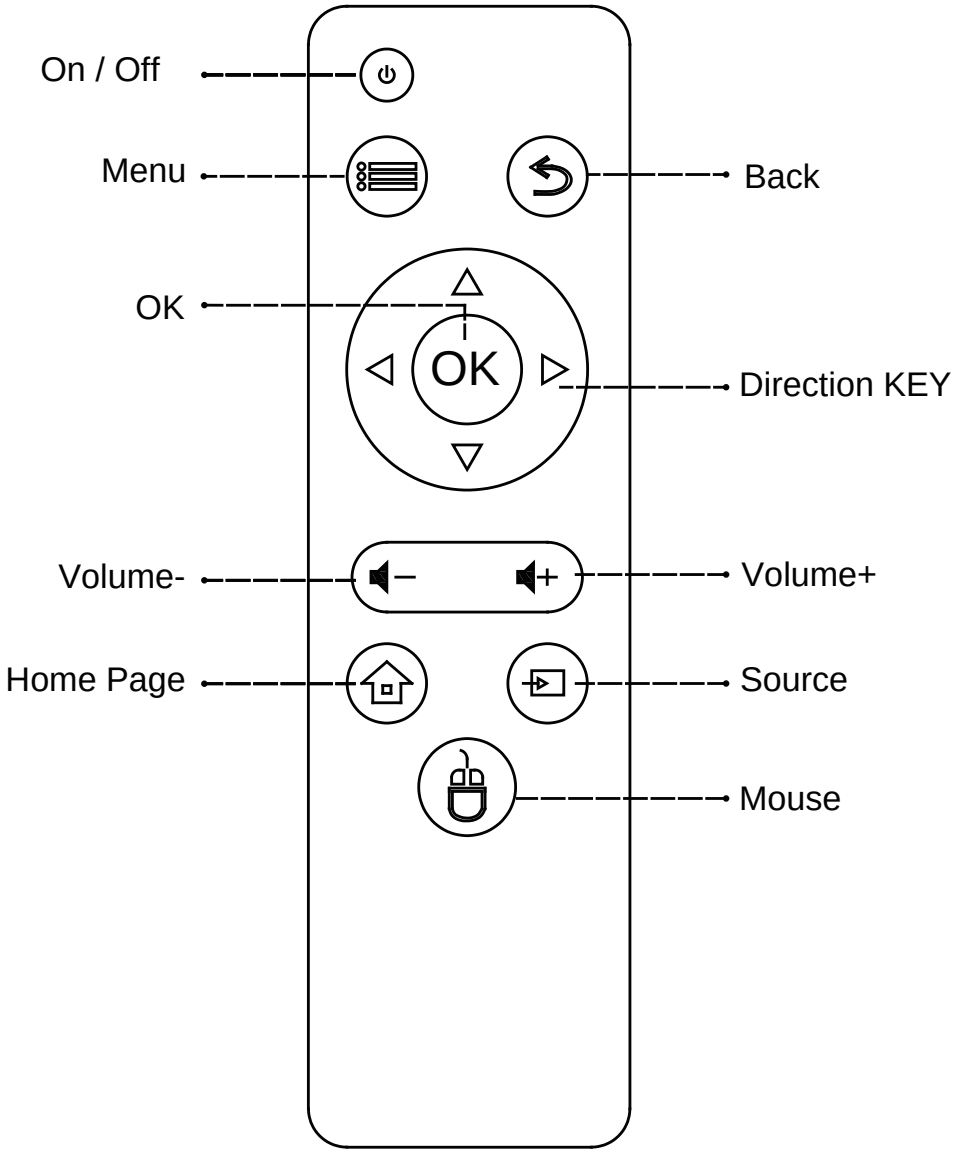

First USE

1. When turn on, display content (USB signals)

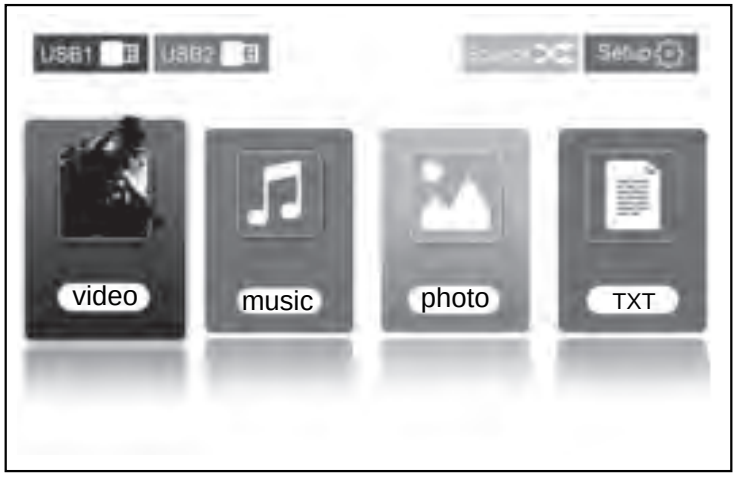

*Read the contents of the usb drive

2. Selecting the input source

Press the button,Select signal source.

*Significant differences based on different versions ,
Different UI has different "Input Source"

First USE

3. Adjust the image

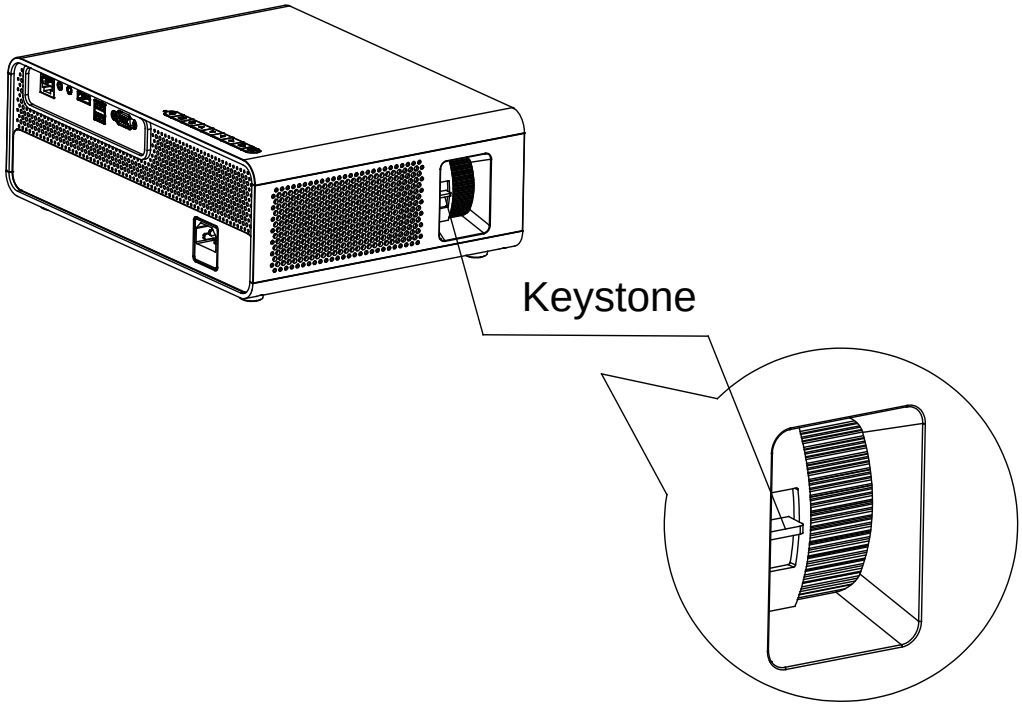

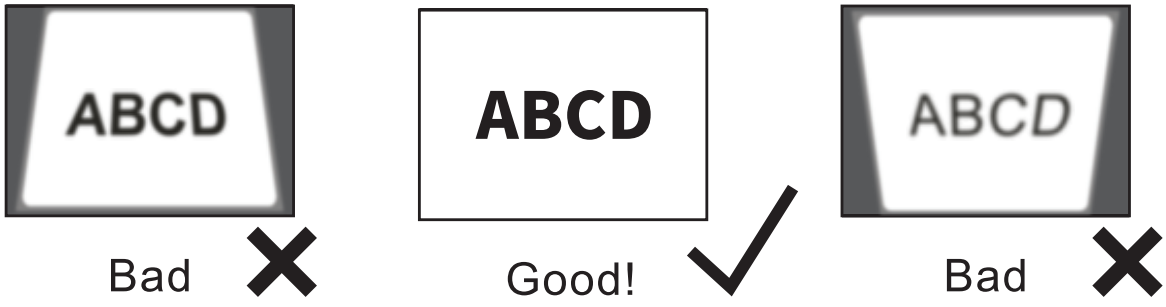

First USE

3. Adjust the image

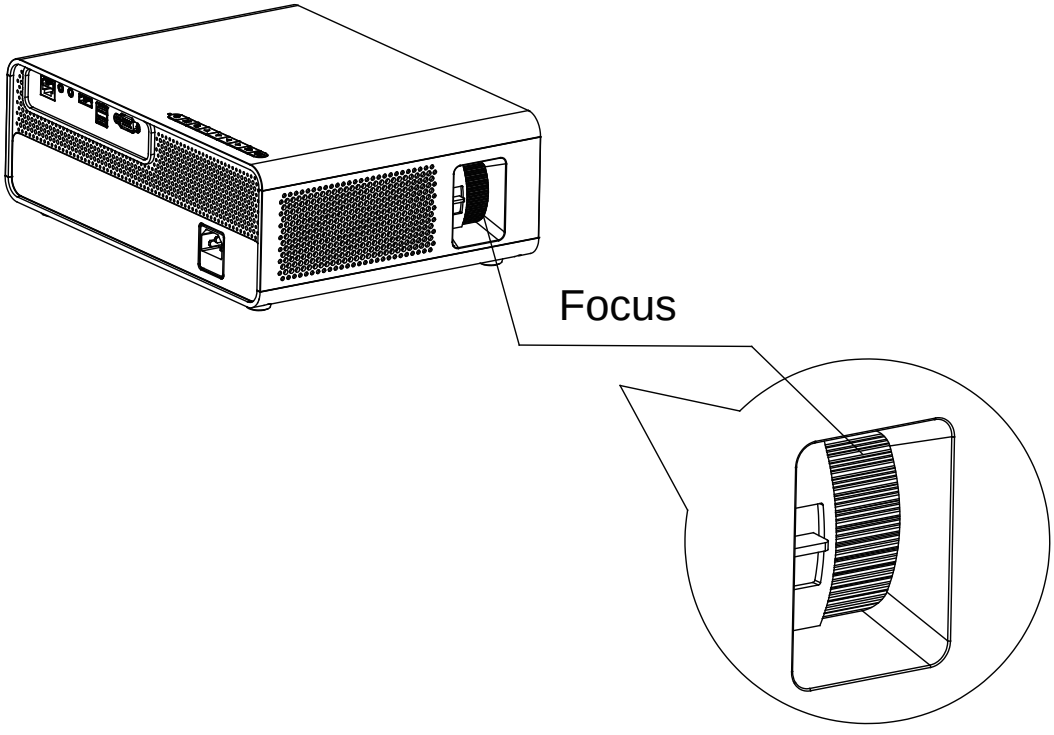

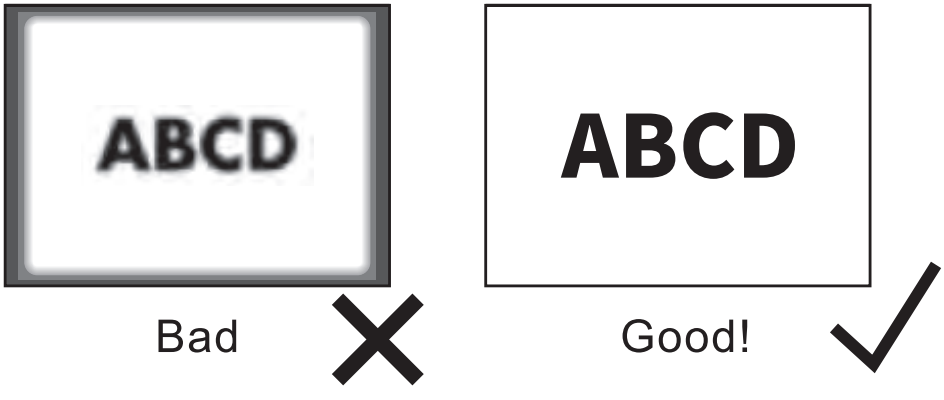

PACKING LIST

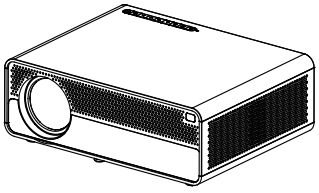

Projector

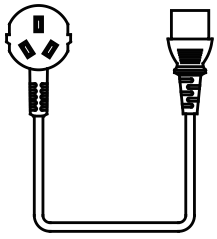

Power Cable

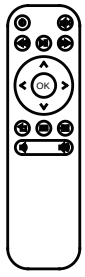

Remote Controller
(Not Standard Accessory)

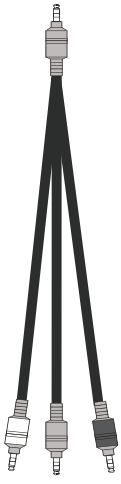

AV Cable

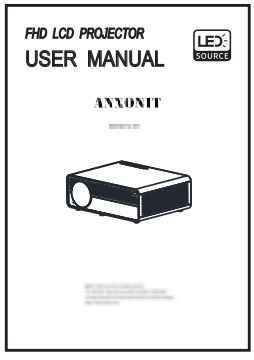

User Manual

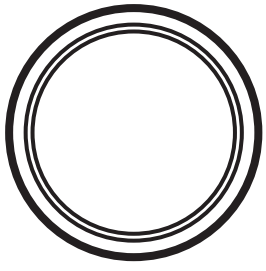

Lens Cover

FCC Warning Statement

Changes or modifications not expressly approved by the party responsible for compliance could void the user's authority to operate the equipment. This equipment has been tested and found to comply with the limits for a Class B digital device, pursuant to Part 15 of the FCC Rules. These limits are designed to provide reasonable protection against harmful interference in a residential installation. This equipment generates uses and can radiate radio frequency energy and, if not installed and used in accordance with the instructions, may cause harmful interference to radio communications. However, there is no guarantee that interference will not occur in a particular installation. If this equipment does cause harmful interference to radio or television reception, which can be determined by turning the equipment off and on, the user is encouraged to try to correct the interference by one or more of the following measures:

-- Reorient or relocate the receiving antenna.

-- Increase the separation between the equipment and receiver.

-- Connect the equipment into an outlet on a circuit different from that to which the receiver is connected.

-- Consult the dealer or an experienced radio/TV technician for help.

FCC Radiation Exposure Statement

The antennas used for this transmitter must be installed to provide a separation distance of at least 20 cm from all persons and must not be co-located for operating in conjunction with any other antenna or transmitter.