GAINSTRONG

EverMesh Module

Specification Version 1.0.0

Author：WSY

March 31, 2021

GainStrong Industry Co.,Ltd. http://www.gainstrong.cn
Tell:+86-755-81720165 support@gainstrong.cn

Rev.	Date	Contents of Revision Change	Remark
1.0.0	2020-3-31	release	WSY

FCC Radiation Exposure Statement

FCC standards: FCC CFR Title 47 Part 15 Subpart C Section 15.247
External Antenna with gain ANT: 5dBi
FCC Regulatory Compliance:
This device complies with Part 15 of the FCC Rules. Operation is subject to the following two conditions:
(1) this device may not cause harmful interference, and
(2) this device must accept any interference received, including interference that may cause undesired operation.
Note: This equipment has been tested and found to comply with the limits for a Class B digital device, pursuant to Part 15 of the FCC Rules. These limits
are designed to provide reasonable protection against harmful interference in a residential installation. This equipment generates, uses and can radiate
radio frequency energy and, if not installed and used in accordance with the instructions, may cause harmful interference to radio communications.
However, there is no guarantee that interference will not occur in a particular installation.
If this equipment does cause harmful interference to radio or television reception, which can be
determined by turning the equipment off and on, the user is encouraged to try to correct the interference by one or more of the following measures:
-- Reorient or relocate the receiving antenna.
-- Increase the separation between the equipment and receiver.
-- Connect the equipment into an outlet on a circuit different from that to which the receiver is connected.
-- Consult the dealer or an experienced radio/TV technician for help.
If power exceeds the limit and the distance(Over 20cm distance in actual use between the device and user) is compliance with the requirement
Warning: changes or modifications not expressly approved by the party responsible for compliance could void the user's authority to operate the equipment.

RF Exposure Compliance:

This equipment complies with FCC radiation exposure limits set forth for an uncontrolled environment. This equipment should be installed and operated with a minimum distance of 20cm between the radiator and any part of your body.

Notice to OEM integrator

If the FCC ID is not visible when the module is installed inside another device, then the outside of the device into which the module is installed must also display a label referring to the enclosed module. The end product shall haves the words "Contains Transmitter Module FCC ID: 2AZCME380-0001".
The device must be professionally installed.
The intended use is generally not for the general public. It is generally for industry/commercial use.
The connector is within the transmitter enclosure and can only be accessed by disassembly of the transmitter that is not normally required. The user has no access to the connector.
Installation must be controlled. Installation requires special training.
Any company of the host device which installs this modular with unlimited modular approval should perform the test of radiated & conducted emission and
spurious emission, etc. according to FCC part 15C: 15.247 and15.207, 15B Class B requirement, only if the tests result comply with FCC part 15C: 15.247 and15.207, 15B Class B requirement, then the host can be sole legally.
When the module is installed inside another device, the user manual of the hose contain below
1) This device may not cause harmful interference.
2) This device must accept any interference received, including interference that may cause undesired operation

1. INTRODUCTION

EverMesh is a highly integrated and cost effective IEEE 802.11n 1x1 2.4 GHz Systemon-a-Chip(SoC) for wireless local area network(WLAN) AP and router module.

EverMesh includes a MIPS 24K processor and integrated serial Flash, DDR2, two-port IEEE 802.3 Ethernet Switch with MAC/PHY, one USB 2.0 interface , I2S/SPDIF-Out audio interface, SLIC VOIP/PCM interface, UART, and GPIOs that can be used for LED controls or other general purpose interface configurations.

EverMesh is designed for smart home deice, wifi hard disk, WiFi router board, remote monitoring, remote video, Industrial control DIY and so on

EverMesh power consumption is very low,usually no more than 0.4W, suitable for battery products, it has a 150M wireless transmission rate, up to 21 gpios. All can be defined for input or output.

2. CHARACTERISTICS

- CPU: AR9331 400Mhz MIPS core
- RAM: 64M DDR2 RAM
- Flash: 16M SPI flash (4/8/32m option)
- Wireless speed: 150Mbps
- General GPIO: 21 (except TX, RX)
- USB: Usb 2.0 master interface, support USB hub extension
- Power supply voltage: 3.3V.
- Port: 1WAN and 1LAN 10/100Mbps network interface
- Antenna: the built-in PCB /IPX external antenna.
- Debug: serial debugging interface has been out.
- Board Power: 0.5W
- Product size: 27.5 * 51.4MM +- 0.1mm

3. PINS

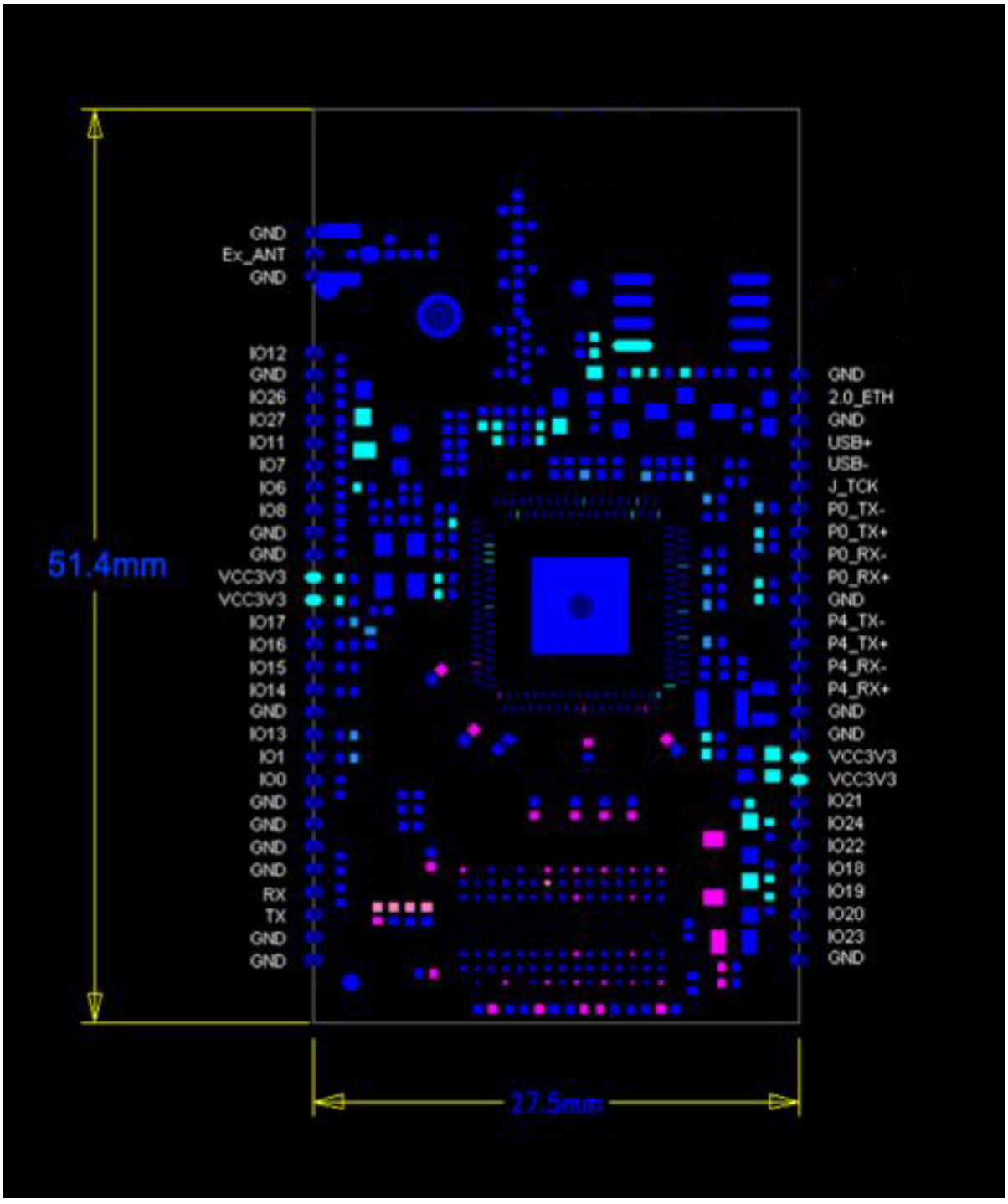
GND
Ex_ANT
GND
IO12
GND
IO26
IO27
IO11
IO7
IO6
IO8
GND
GND
VCC3V3
VCC3V3
IO17
IO16
IO15
IO14
GND
IO13
IO1
IO0
GND
GND
GND
GND
RX
TX
GND
GND
GND
2.0_ETH
GND
USB+
USB-
J_TCK
P0_TX-
P0_TX+
P0_RX-
P0_RX+
GND
P4_TX-
P4_TX+
P4_RX-
P4_RX+
GND
GND
VCC3V3
VCC3V3
IO21
IO24
IO22
IO18
IO19
IO20
IO23
GND
51.4mm
27.5mm

Pin No	Name	GPIO state	spec
1	GND		GROUND
2	EX_ANT	disconnected	Extenal Antenna reserved
3	GND		GROUND
4	GPIO12	10K GND	I/O I2S_MICIN/UART_CTS
5	GND		GROUND
6	GPIO26	Floating ouput	I/O
7	GPIO27/SYS_LED	3K led 3.3v output	I/O
8	GPIO11	1K 100PF GND input	I/O Reset button I2S_MCK/UART_RTS
9	GPIO7	10K GND output	I/O JTAG_TDO/I2S_WS
10	GPIO6	10K GND output	I/O JTAG_TDI/I2S_CK
11	GPIO8	10K GND output	I/O JTAG_TMS/I2S_SD
12	GND		
13	GND		
14	VCC3V3		
15	VCC3V3		
16	GPIO17	10K 2.5v output	I/O
17	GPIO16	10K GND output	I/O
18	GPIO15	10K GND output	I/O
19	GPIO14	10K GND output	I/O
20	GND		
21	GPIO13	10K 2.5v output	I/O
22	GPIO1	10K 2.5v output	I/O
23	GPIO0	10K GND output	I/O
24	GND		
25	GND		
26	GND		

GainStrong Industry Co.,Ltd. http://www.gainstrong.cn
Tell:+86-755-81720165 support@gainstrong.cn

27	GND		
28	Uart RX / GPIO9		RX SPI_CS_1/UART_SIN
29	Uart TX / GPIO10		TX SPI_CS_2/UART_SOUT
30	GND		GROUND
31	GND		
32	GND		
33	GPIO23	Floating output	I/O SPDIF_OUT
34	GPIO20	Floating output	I/O I2S_SD/SLIC_FS_IN
35	GPIO19	Floating output	I/O I2S_WS/SLIC_FS_OUT
36	GPIO18	Floating output	I/O I2S_CK/SLIC_CLK
37	GPIO22	Floating output	I/O I2S_MICIN/SLIC_DATA_IN
38	GPIO24	Floating output	I/O
39	GPIO21	Floating output	I/O I2S_MCK/SLIC_DATA_OUT
40	VCC3V3		
41	VCC3V3		
42	GND		
43	GND		
44	P4_RX+		P4 Network Port
45	P4_RX-		
46	P4_TX+		
47	P4_TX-		
48	GND		
49	P0_RX+		P0 Network Port
50	P0_RX-		
51	P0_TX+		
52	P0_TX-		
53	JTAG_TCK		JTAG TCK
54	USB-		USB Master USB+

55	USB+		USB Master USB-
56	GND		GROUND
57	E_2.0V		Bias power output
58	GND		GROUND

NOTE:

1. All power supply pins (VCC3V3) can power on, recommended 14 and 15 pin
2. Unused GPIOs can floating, no need pull-up or pull-down.
3. The power supply voltage of GPIO is 2.62V, when the GPIO outputs high, the voltage is 2.62V, the low voltage is 0V.
   If the control circuit of GPIO access to 3.3V, recommended circuit:
   Input mode:

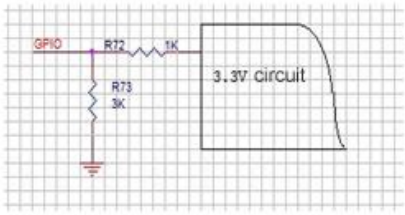

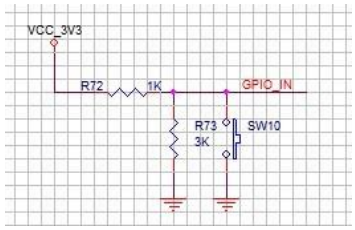

(A) (B)

4. NET_POW, Network transformer bias power output. The output of 2.2V, to offset the use of wired network transformer
5. network port(default): P0、P4 Lan/Wan can be programmer

6. Bootstrap setting

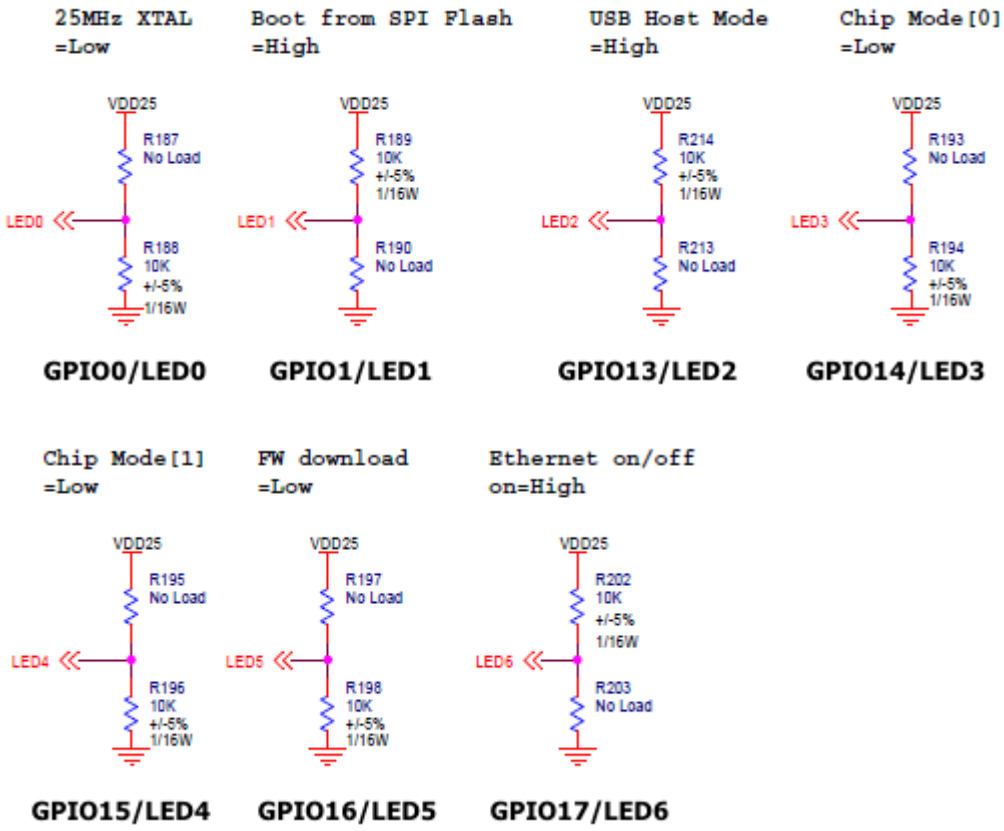

7. MODULE OPERATING ENVIRONMENT

Working temperature: 0 ℃ to 40 ℃;

Storage temperature: -40 ℃ to 70 ℃;

Humidity: 10% to 90% RH no condensation;

Storage humidity: 5% to 90% RH no condensation.

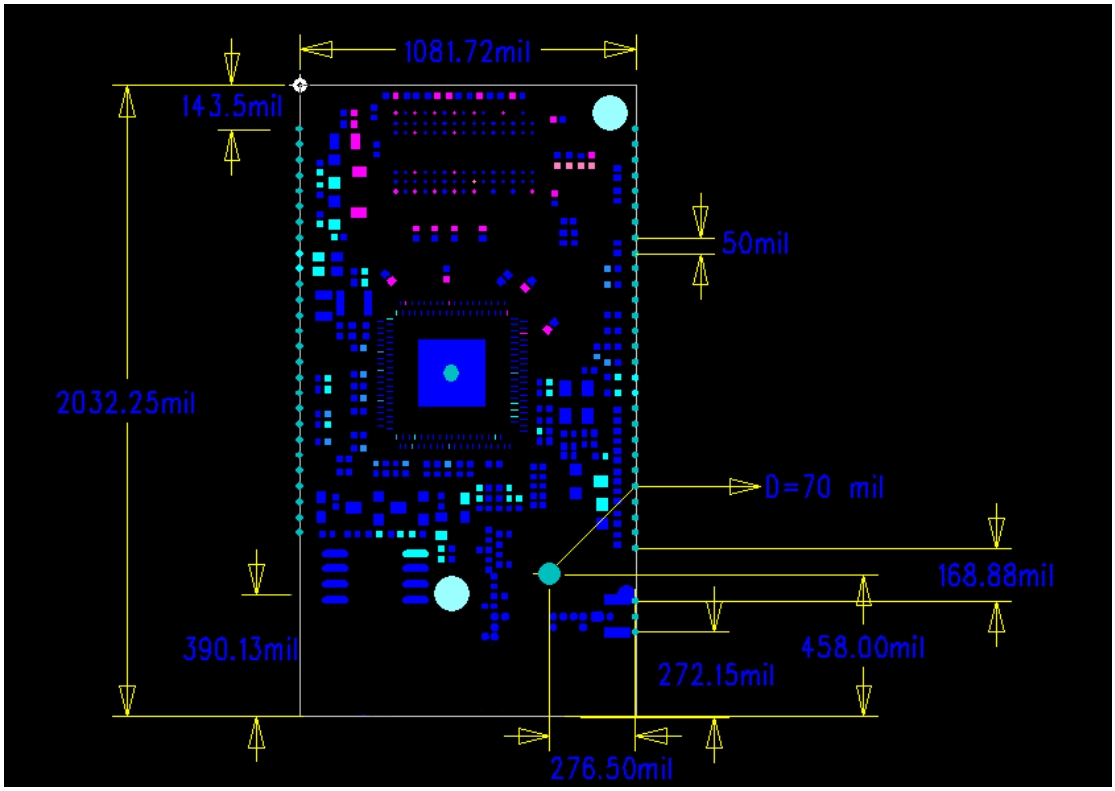

GainStrong Industry Co.,Ltd. http://www.gainstrong.cn
Tell:+86-755-81720165 support@gainstrong.cn

8. REFLOW SOLDERING TEMPERATURE CURVE

My First Product 周一 **2014年04月07日, 15:27:55**

炉子名称：**JTR-800** 制程界限名称：**System Default for Reflow**

温度设置 (摄氏度)

温区	1	2	3	4	5	6	7	8
上温区	125	135	155	185	195	225	240	230
下温区	125	135	155	185	195	225	240	230

传送带速度 (公分/分): **70.0**

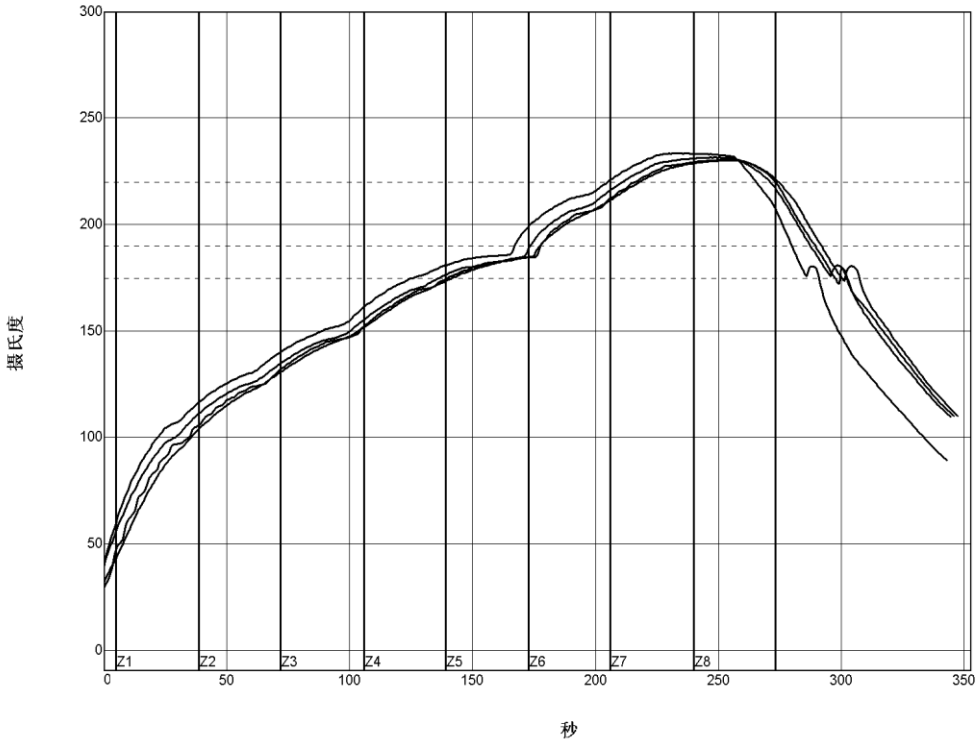

PWI= 94%	恒温时间175至190C		回流时间 /220C		最高温度	
<TC2>	35.53	-82%	55.58	-72%	230.28	-94%
<TC3>	37.66	-74%	58.66	-57%	230.56	-89%
<TC4>	41.52	-62%	60.63	-47%	233.62	-28%
<TC5>	37.07	-76%	60.44	-48%	231.67	-67%
温差	5.99		5.05		3.34	

制程界限:

锡膏: System Default for Reflow

统计数名称	最低界限	最高界限	单位
恒温时间175-190摄氏度	30	90	秒
回流以上时间 - 220摄氏度	50	90	秒
最高温度	230	240	度 摄氏度

描述:

温度曲线是由 KIC 科技所得

KIC
San Diego, CA USA

电话: +1-858-673-6050
传真: +1-858-673-0085

www.kicthermal.com
tech@kicmail.com