SULONG TOYS

REMOTE CONTROL CAR SMART ASSEMBLY KIT

THE COOL GIFT FOR CAR LOVERS AND FUTURE AUTO ENGINEERS

ITEM NO.: SL-00003

ILLUSTRATION OF PLACEMENT OF THE UV STICKERS

How to use the UV stickers:

1.Take off the transfer printing sticker
2.Align and paste it
3.Press and then peel off the transparent film to complete

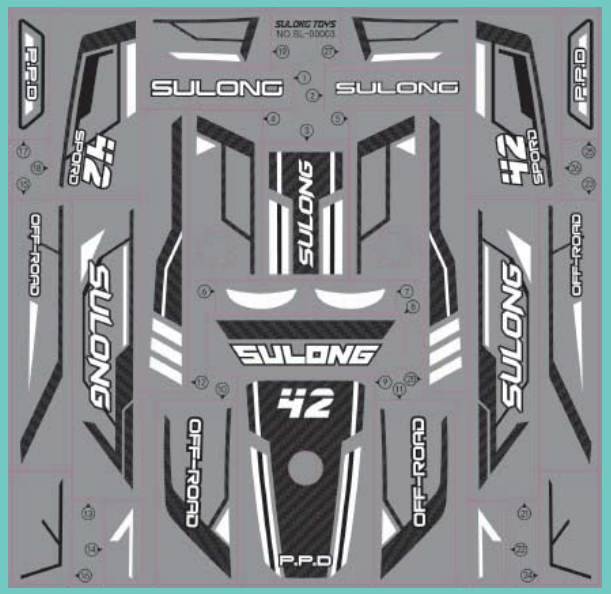

Please apply No.7 sticker before assembly

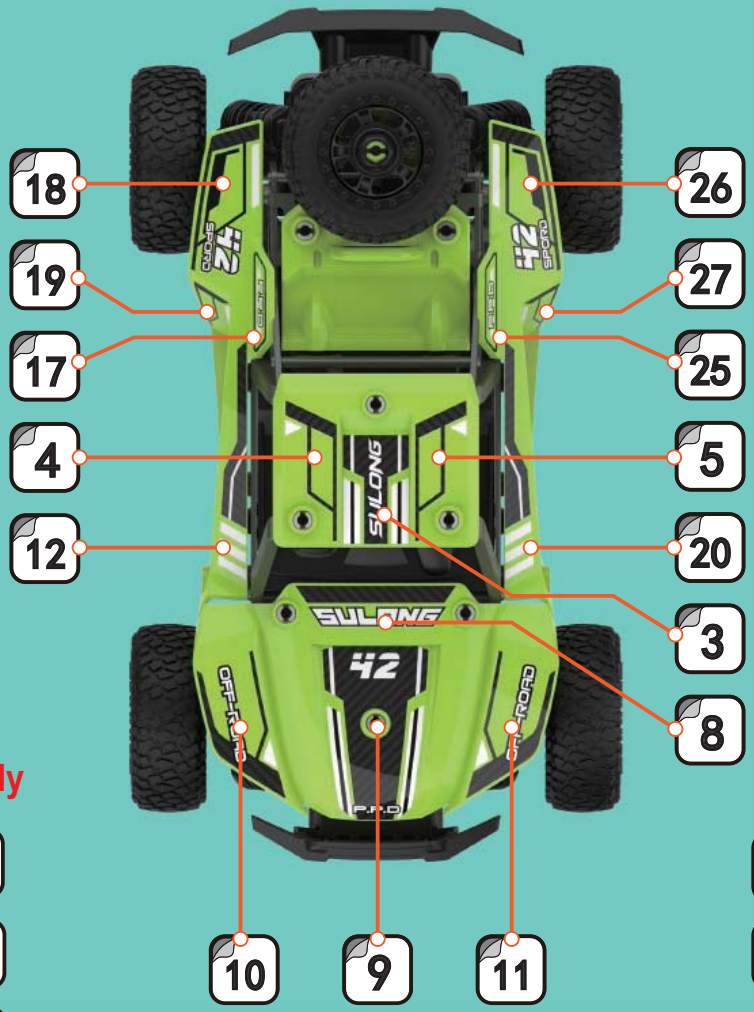

Please apply No.6 sticker before assembly

IMPORTANT NOTICE

ATTENTION

- Before using the product, the guardian bear the responsibility to understand the instructions in this manual and give guidance to use this product in the right way.
- When using tools like knives to assemble this product, adult supervision is needed, and special attention should be paid to avoid personal injury.
- This product should be kept properly to prevent children from accidental ingestion.
- The removed parts shall be properly placed where is out of children's reach of.
- Plastic bags are not toys and might cause a choking hazard. Please dispose of them properly after unboxing.
- These rubber parts may contain sharp tips. To avoid personal injury, please be careful while assembling and transporting the model.
- Only alkaline batteries or rechargeable batteries is applicable.
- Do not mix different types of batteries or old and new batteries. Depleted batteries should be removed from the model.
- The battery replacement shall be implemented under adult supervision with the two poles aligned correctly to avoid short-circuit.
- Do not charge non-rechargeable batteries. Take the rechargeable batteries from the model before charging.
  Make sure the charging process is under adult supervision. Do not charge when the batteries are damaged or leaks.
- Only use batteries of identical type or equivalent to the recommended type.
- Do not insert the wires or components into sockets. Do not connected the toy with excessive power supplies than recommended.
- Do not place the batteries near the source of fire or waters, or knock or have it exposed to the sun.
- If your skin or clothes have contacts with the battery leakage, please have it or them rinsed immediately.
- Charging the rechargeable batteries on a regular basis is conductive to their storage.
  Please use chargers that are identical or equivalent to the recommended ones for charging.

NOTE: This equipment has been tested and found to comply with the limits for a Class B digital device, pursuant to part 15 of the FCC Rules. These limits are designed to provide reasonable protection against harmful interference in a residential installation. This equipment generates uses and can radiate radio frequency energy and, if not installed and used in accordance with the instructions,may cause harmful interference to radio communications. However, there is no guarantee that interference will not occur in a particular installation. If this equipment does cause harmful interference to radio or television reception, which can be determined by turning the equipment off and on, the user is encouraged to try to correct the interference by one or more of the following measures:
- Reorient or relocate the receiving antenna.
- Increase the separation between the equipment and receiver.
-Connect the equipment into an outlet on a circuit different from that to which the receiver is connected.
-Consult the dealer or an experienced radio/TV technician for help
Changes or modifications not expressly approved by the party responsible for compliance could void the user's authority to operate the equipment.
This device complies with Part 15 of the FCC Rules. Operation is subject to the following two conditions:
(1) this device may not cause harmful interference, and
(2) this device must accept any interference received, including interference that may cause undesired operation.

REMOTE CONTROLLER PANELS DIAGRAM

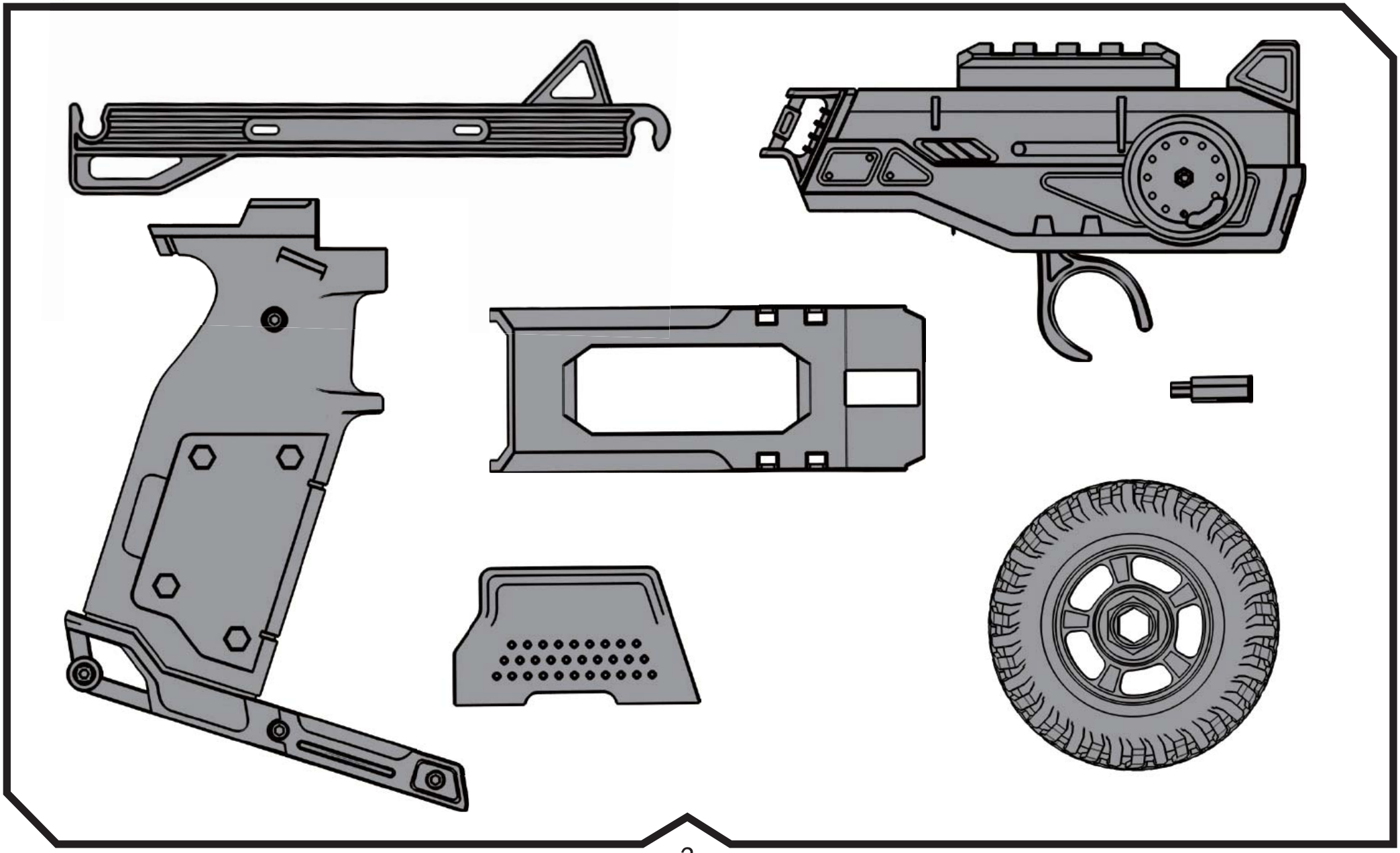

STEP-BY-STEP ASSEMBLY INSTRUCTIONS

REMOTE CONTROLLER

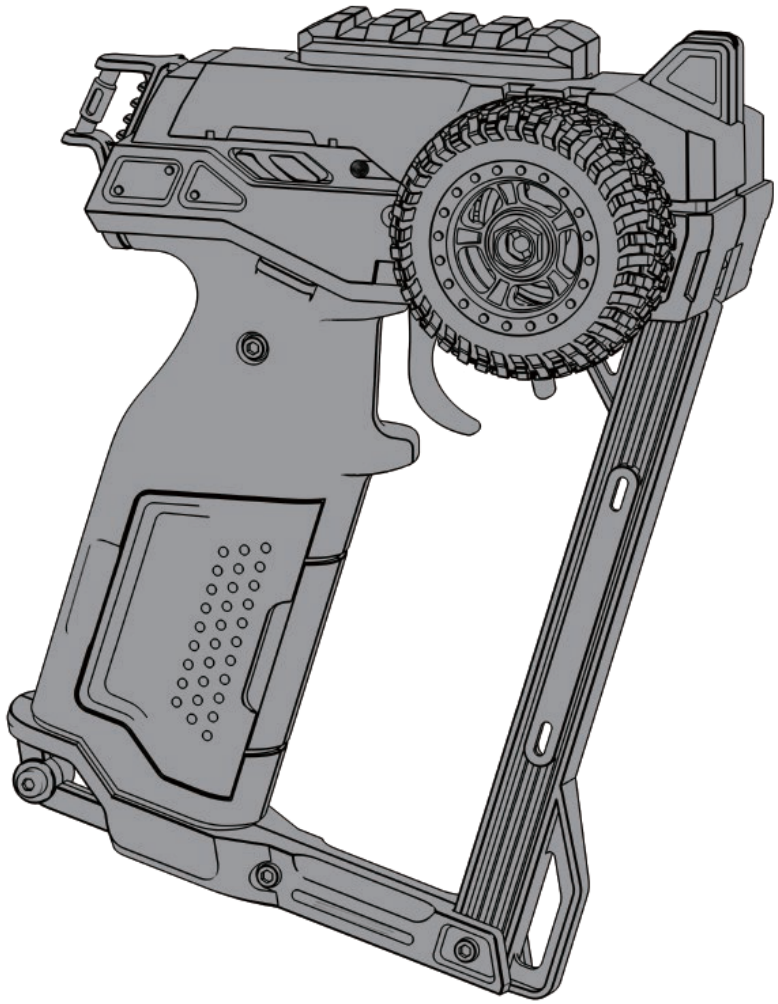

ASSEMBLY-REQUIRED ACCESSORIES

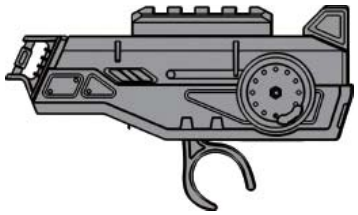

Main Remote Controller Module *1

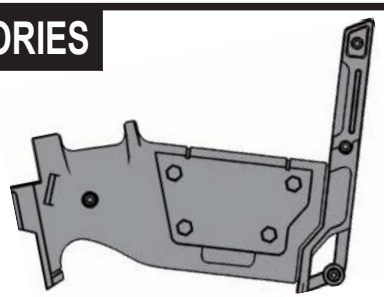

Power Handle Module *1

STEP-BY-STEP ASSEMBLY INSTRUCTIONS

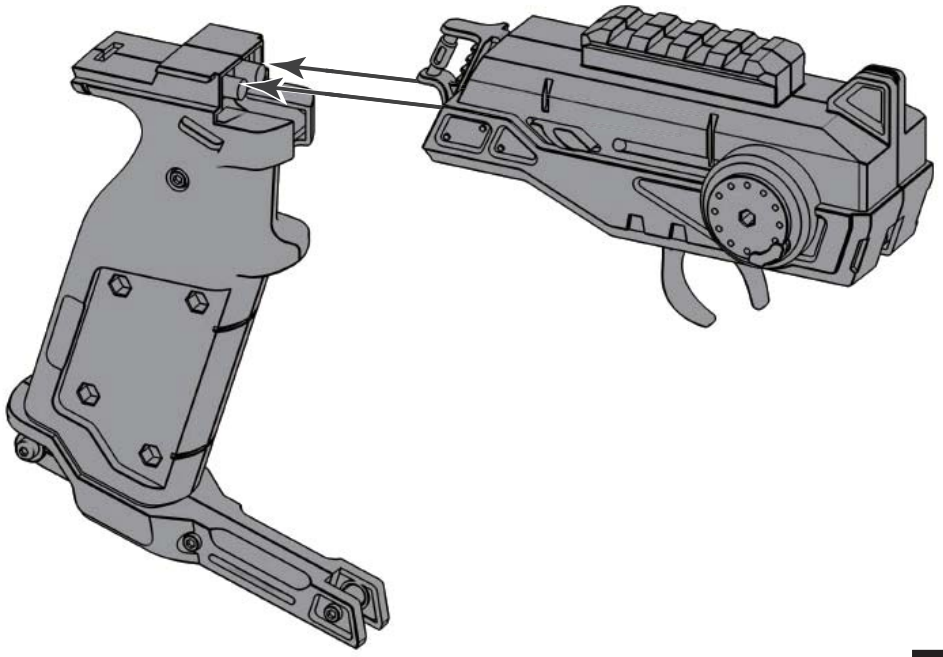

1

ASSEMBLY-REQUIRED ACCESSORIES

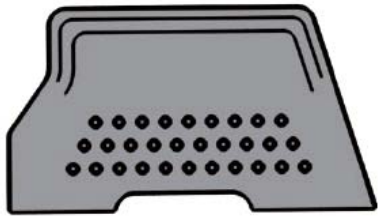

Handle Patch * 1

STEP-BY-STEP ASSEMBLY INSTRUCTIONS

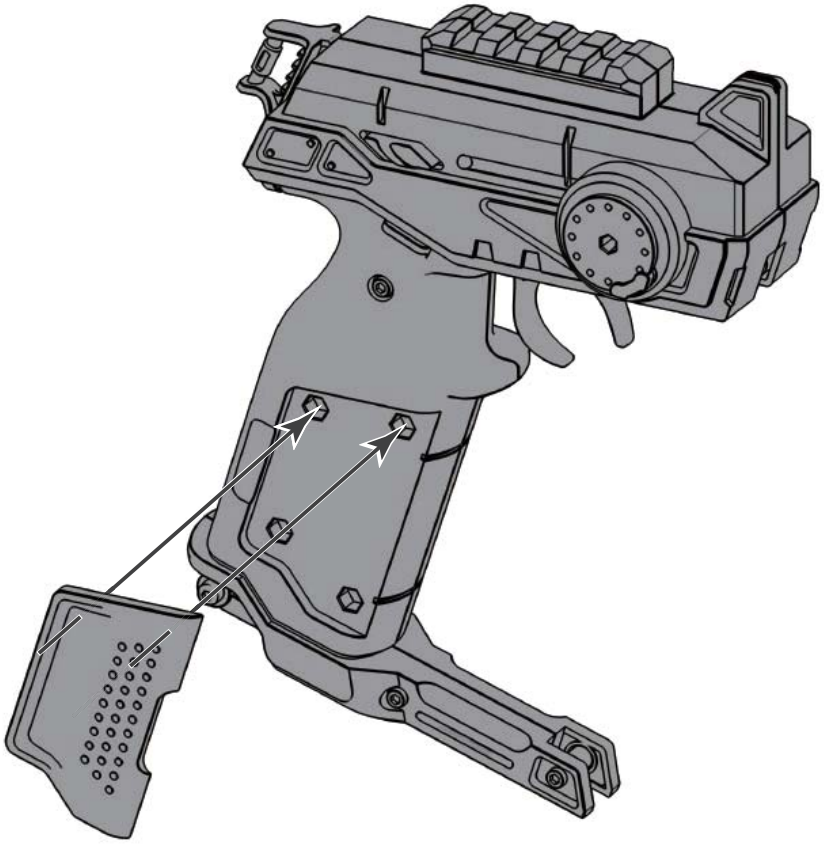

2

ASSEMBLY-REQUIRED ACCESSORIES

Shaft Plug* 1

Wheel * 1

STEP-BY-STEP ASSEMBLY INSTRUCTIONS

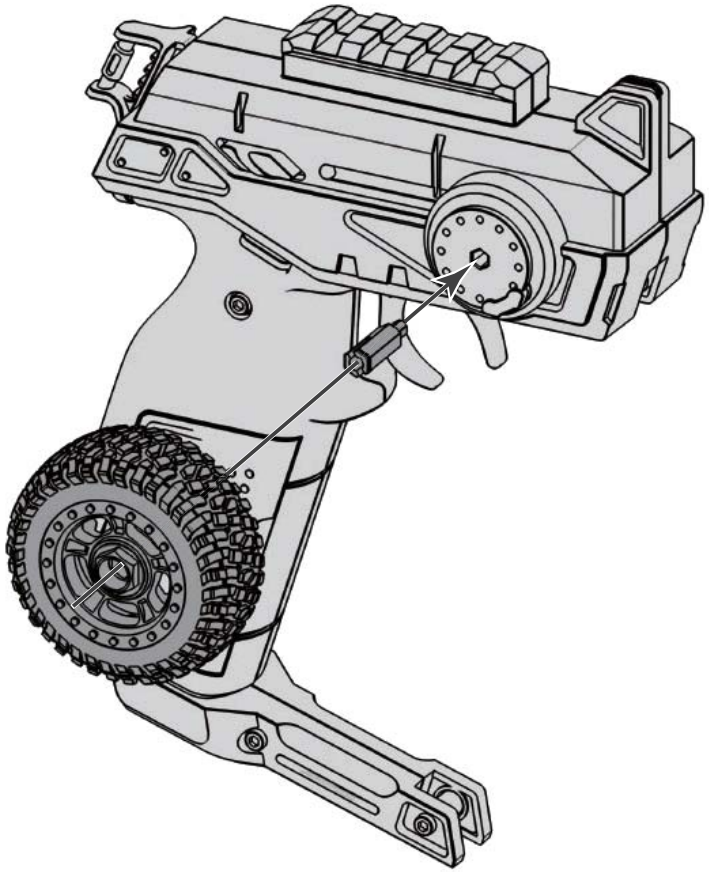

3

ASSEMBLY-REQUIRED ACCESSORIES

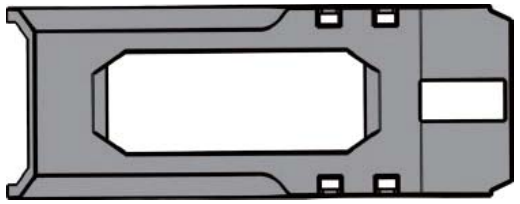

Cover Casing * 1

STEP-BY-STEP ASSEMBLY INSTRUCTIONS

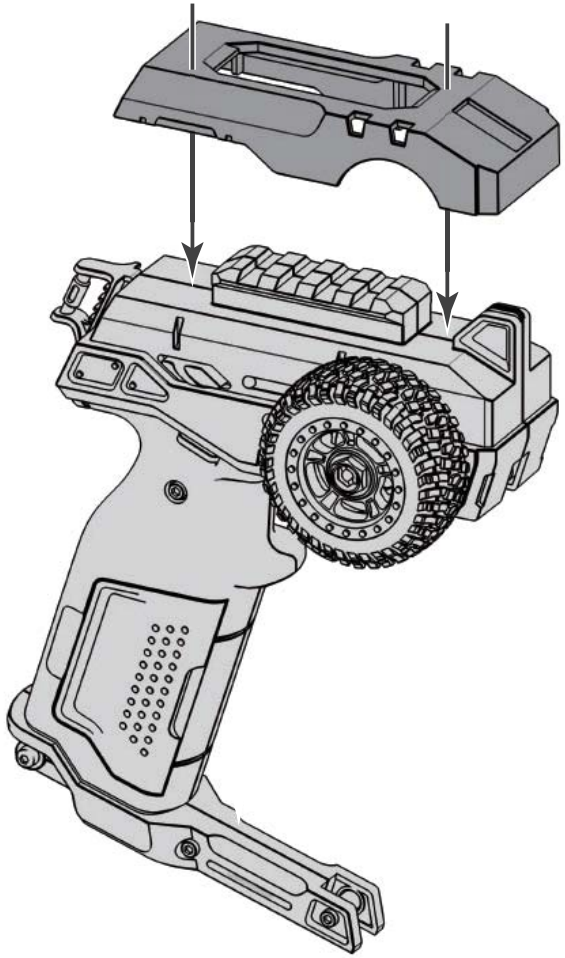

4

ASSEMBLY-REQUIRED ACCESSORIES

Guard Bar * 1

STEP-BY-STEP ASSEMBLY INSTRUCTIONS

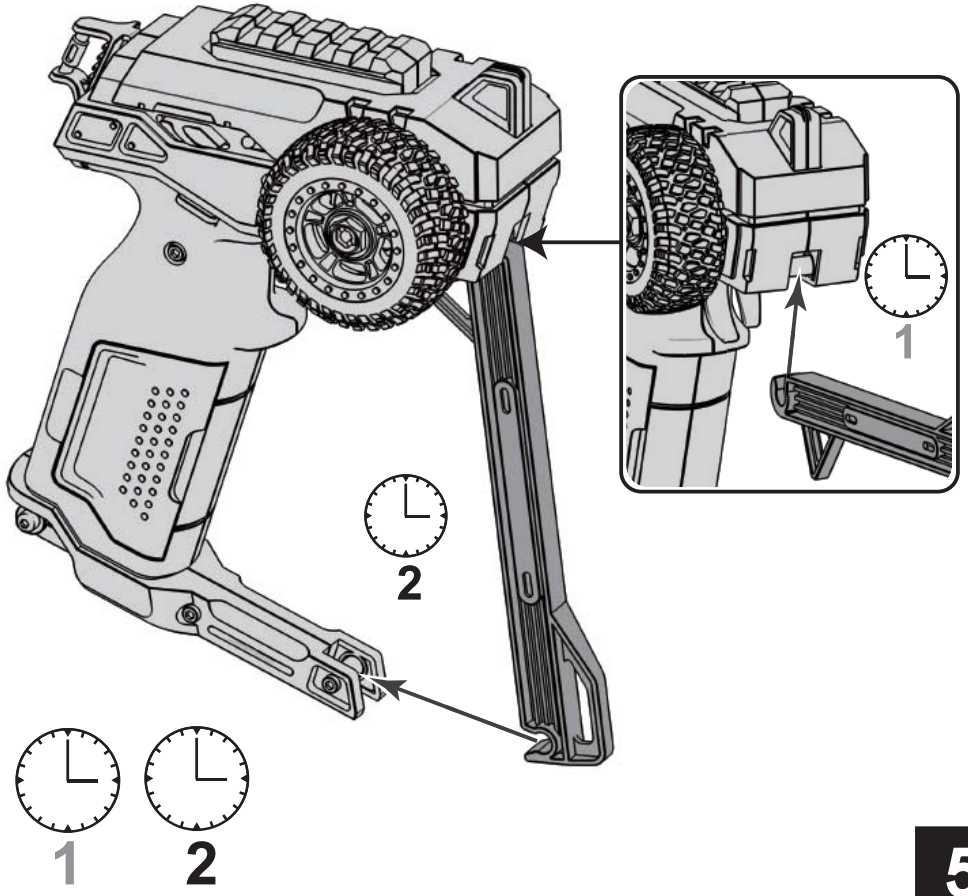

5

CAR BODY PANEL DIAGRAM

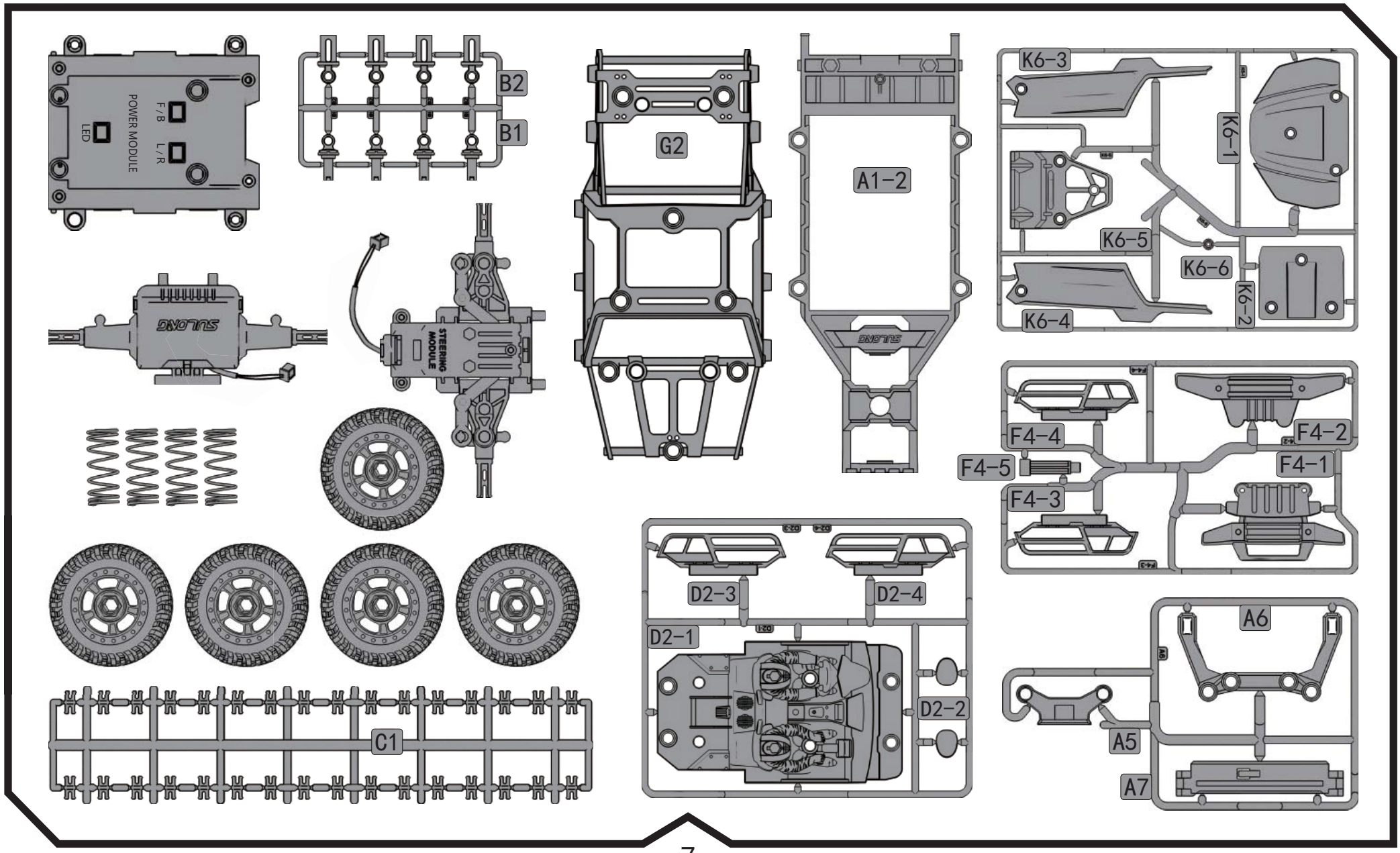

STEP-BY-STEP ASSEMBLY INSTRUCTIONS

UNDER-BODY DIAGRAM

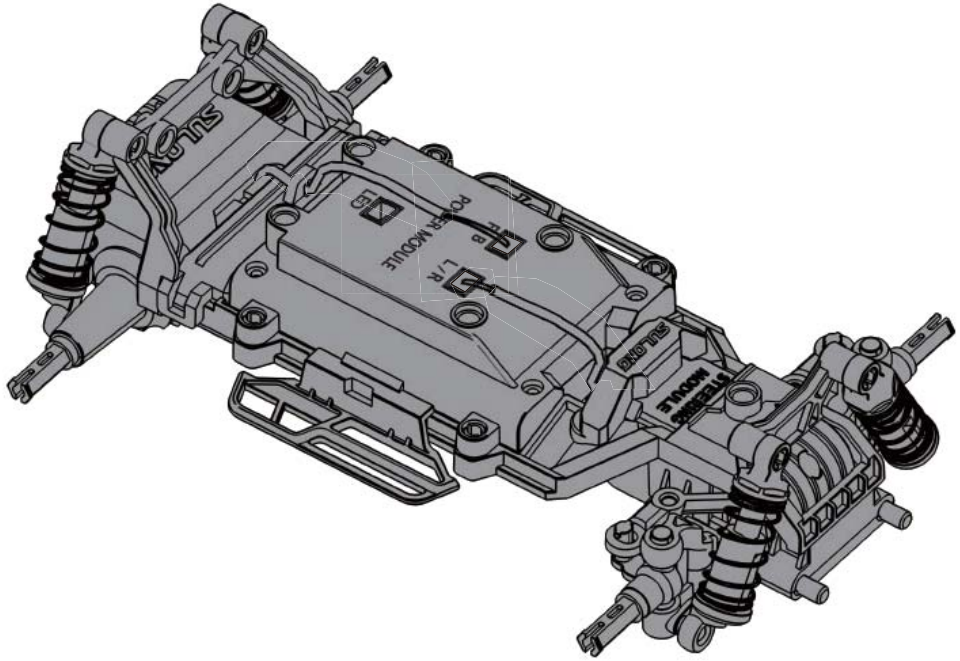

ASSEMBLY-REQUIRED ACCESSORIES

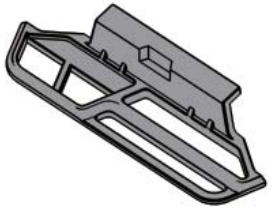

D2-4 * 1

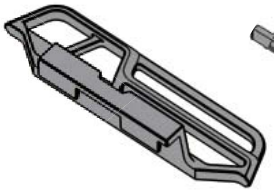

D2-3 * 1

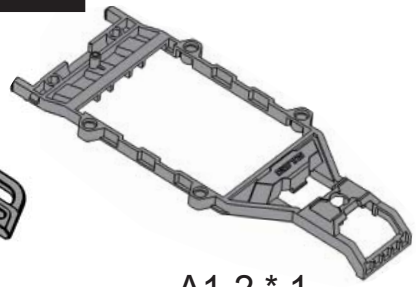

A1-2 * 1

STEP-BY-STEP ASSEMBLY INSTRUCTIONS

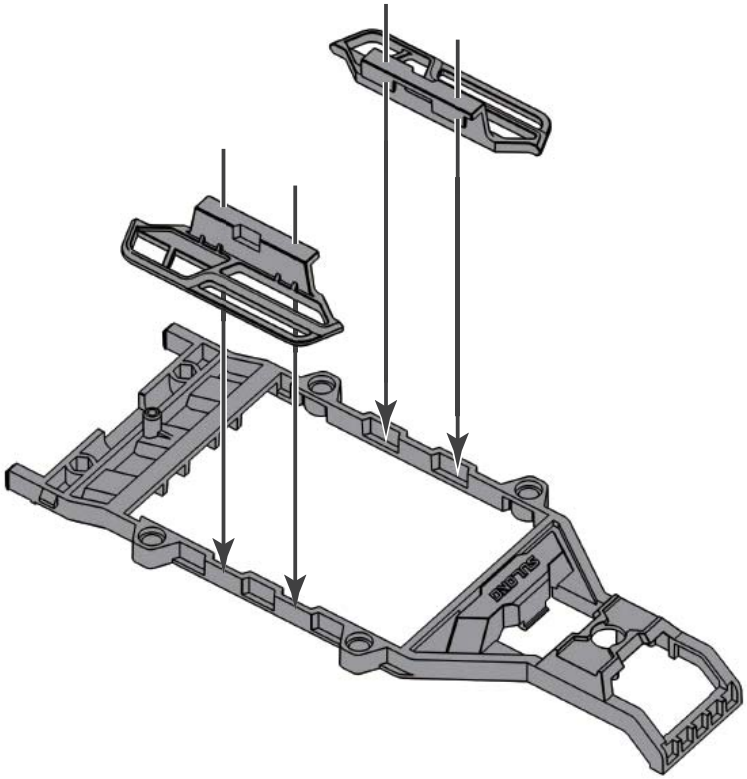

1

ASSEMBLY-REQUIRED ACCESSORIES

Latch C1 * 4

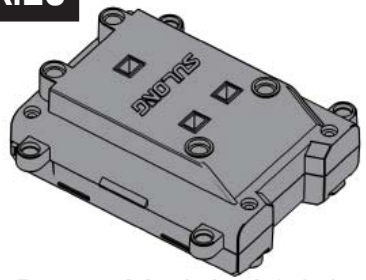

Power Module A2 * 1

STEP-BY-STEP ASSEMBLY INSTRUCTIONS

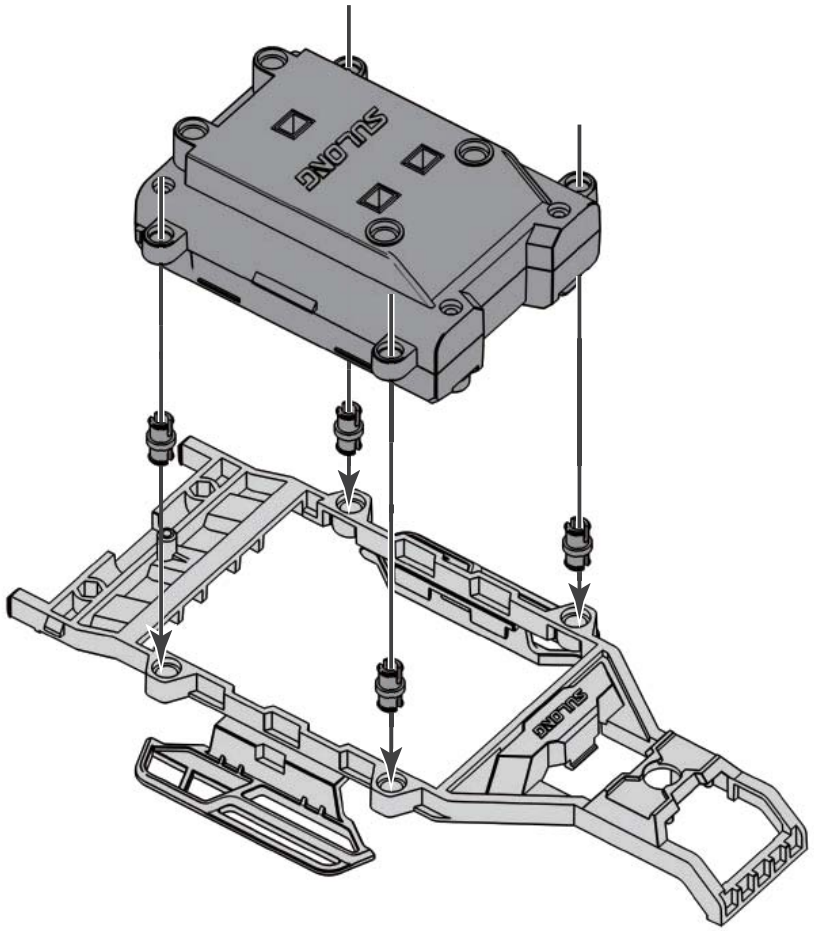

2

ASSEMBLY-REQUIRED ACCESSORIES

Latch C1 * 2

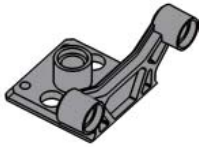

A5 * 1

STEP-BY-STEP ASSEMBLY INSTRUCTIONS

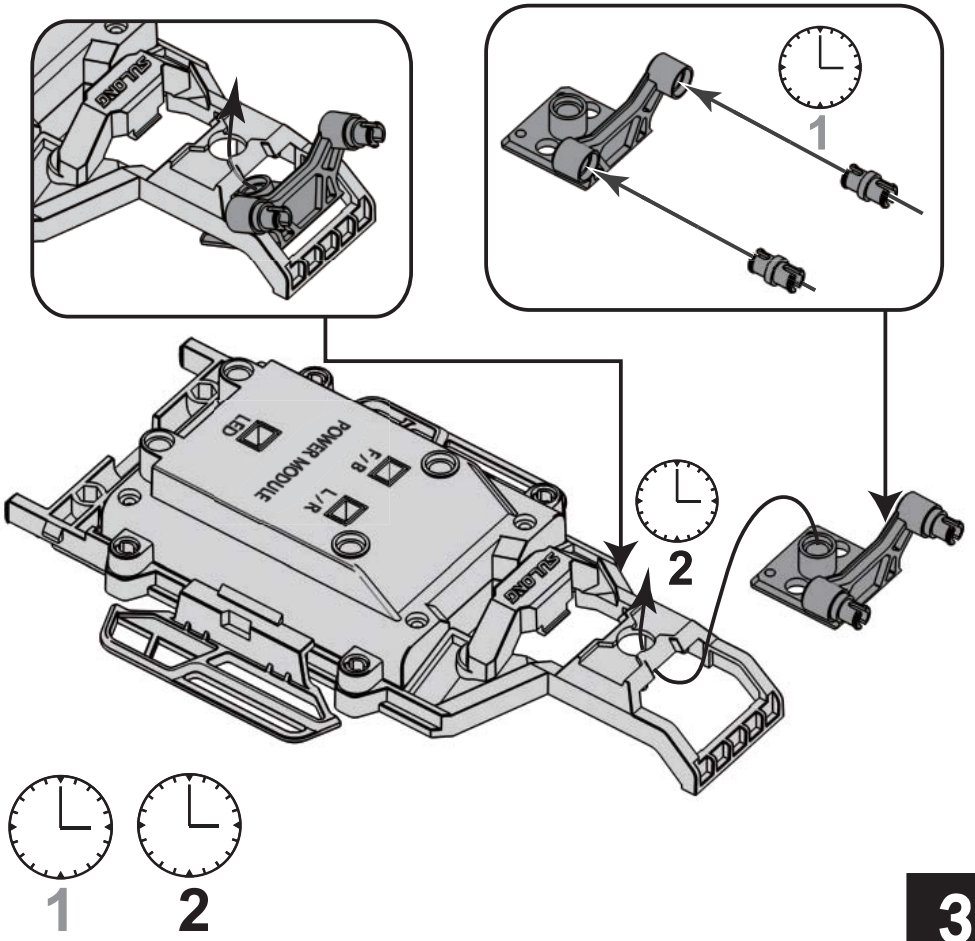

3

ASSEMBLY-REQUIRED ACCESSORIES

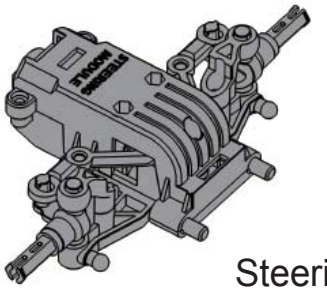

Steering Module A3 * 1

STEP-BY-STEP ASSEMBLY INSTRUCTIONS

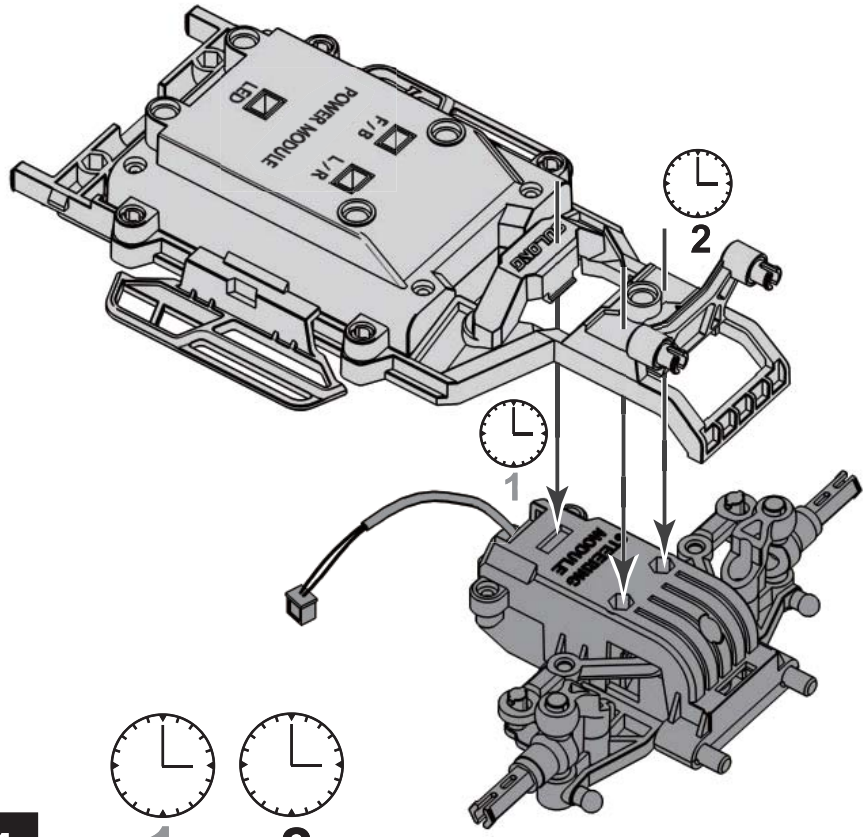

4

ASSEMBLY-REQUIRED ACCESSORIES

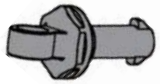

Shock Absorber B1 * 2

Spring * 2

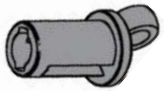

Shock Absorber Tube B2 * 2

STEP-BY-STEP ASSEMBLY INSTRUCTIONS

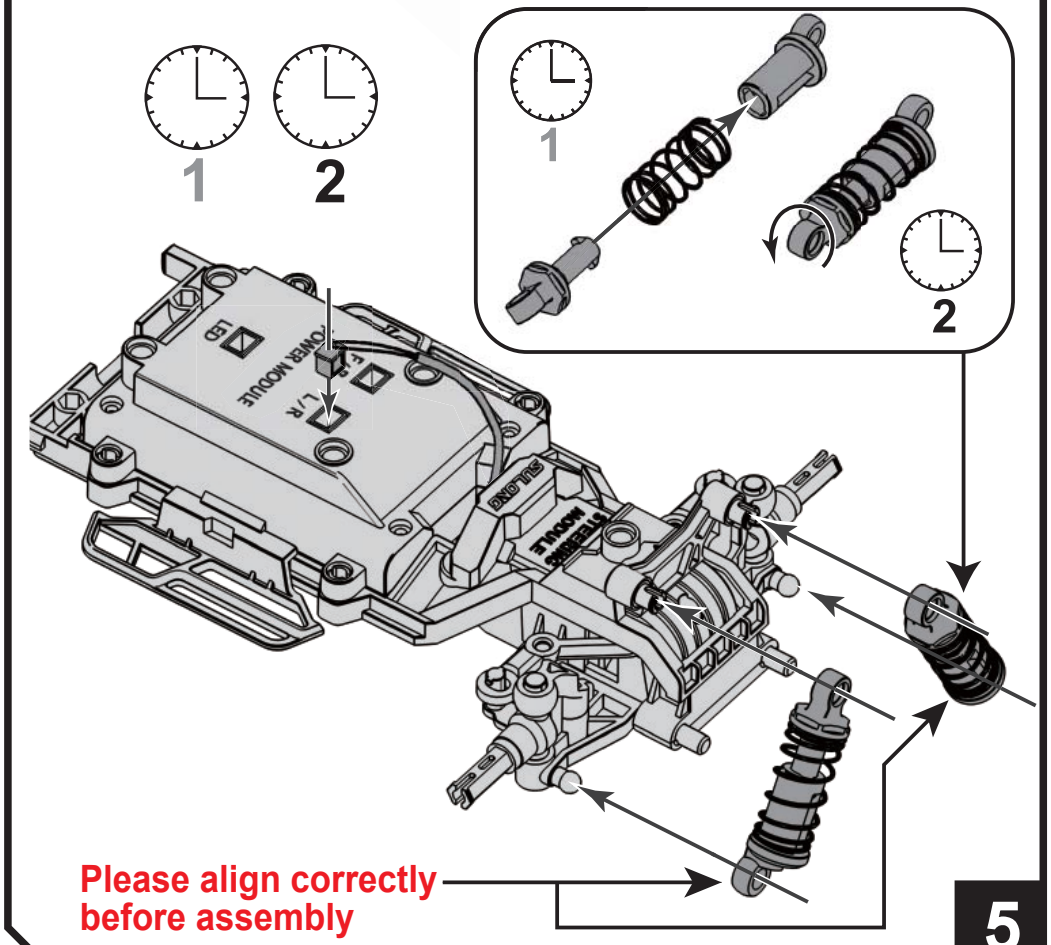

5

ASSEMBLY-REQUIRED ACCESSORIES

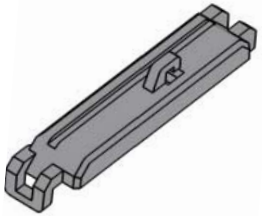

Pressure Strip A7 * 1

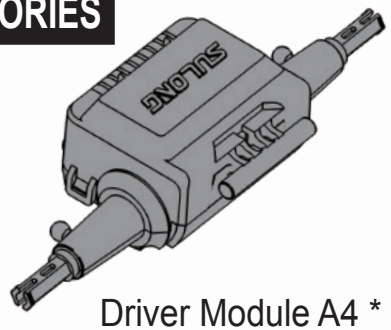

Driver Module A4 * 1

STEP-BY-STEP ASSEMBLY INSTRUCTIONS

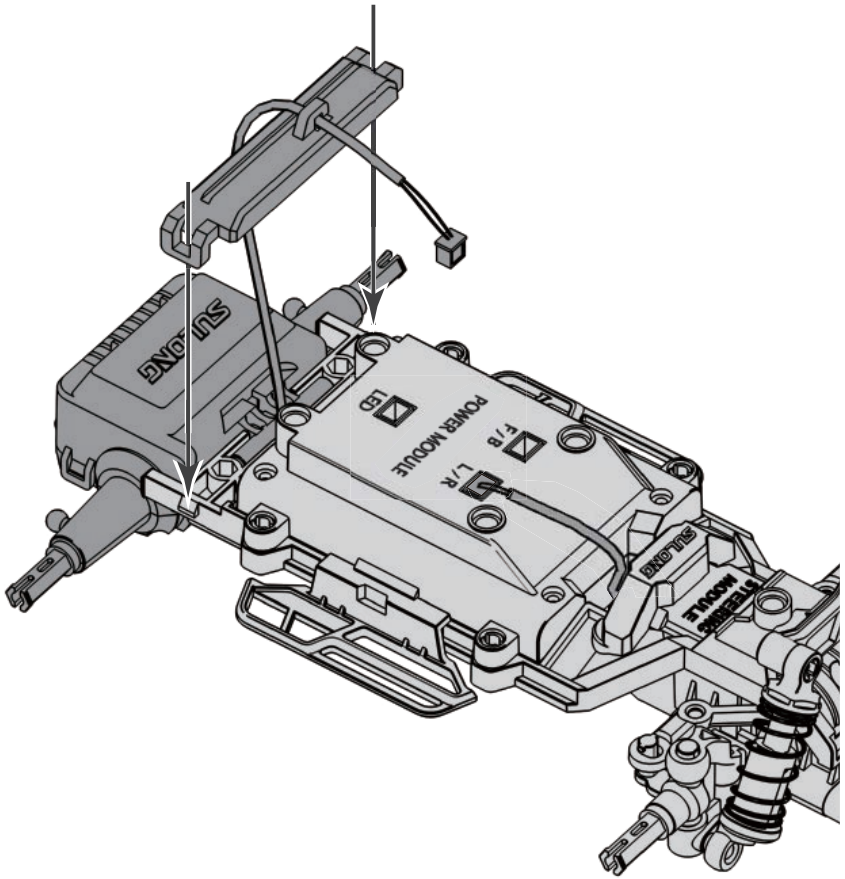

6 Identify the A7 direction and fasten it on both sides with force

ASSEMBLY-REQUIRED ACCESSORIES

Latch C1 * 2

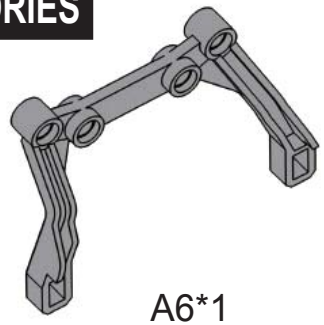

A6*1

STEP-BY-STEP ASSEMBLY INSTRUCTIONS

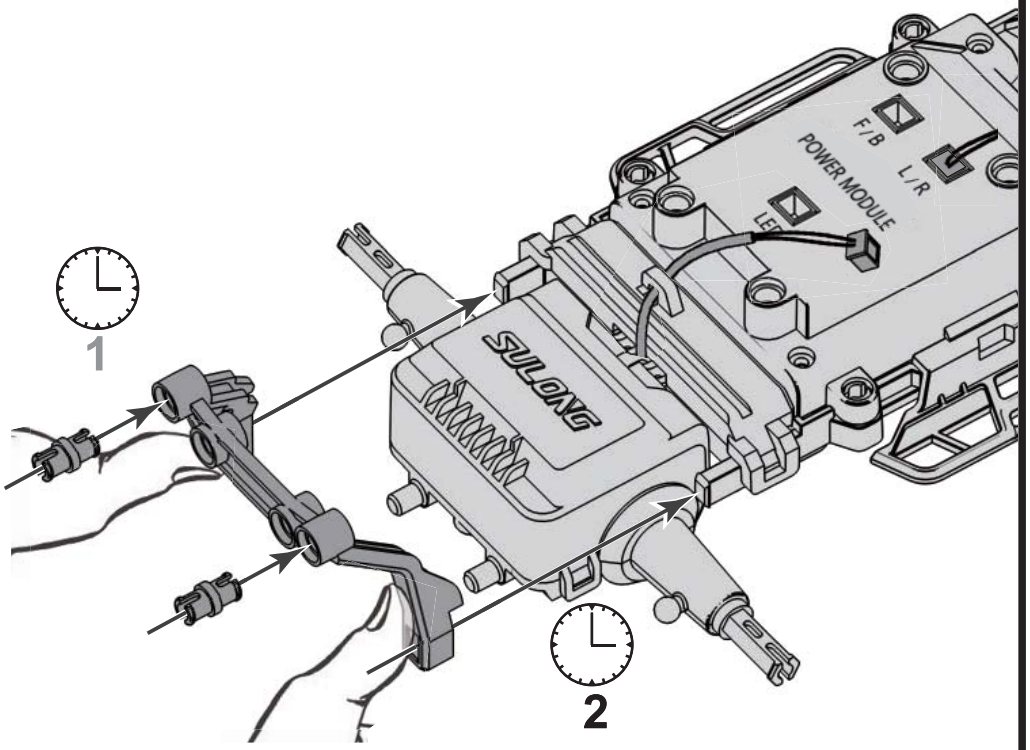

Press firmly in the direction of the arrow to install A6 into the underbody **7**

ASSEMBLY-REQUIRED ACCESSORIES

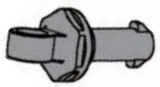

Shock Absorber B1 * 2

Spring * 2

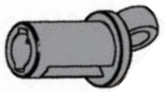

Shock Absorber Tube B2 * 2

STEP-BY-STEP ASSEMBLY INSTRUCTIONS

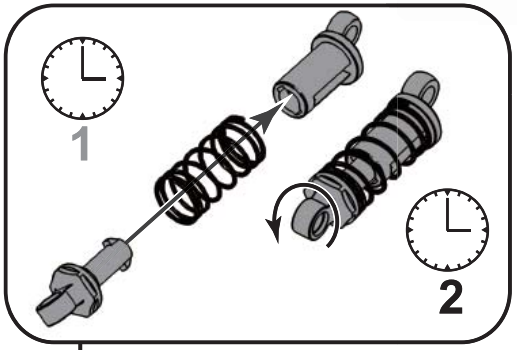

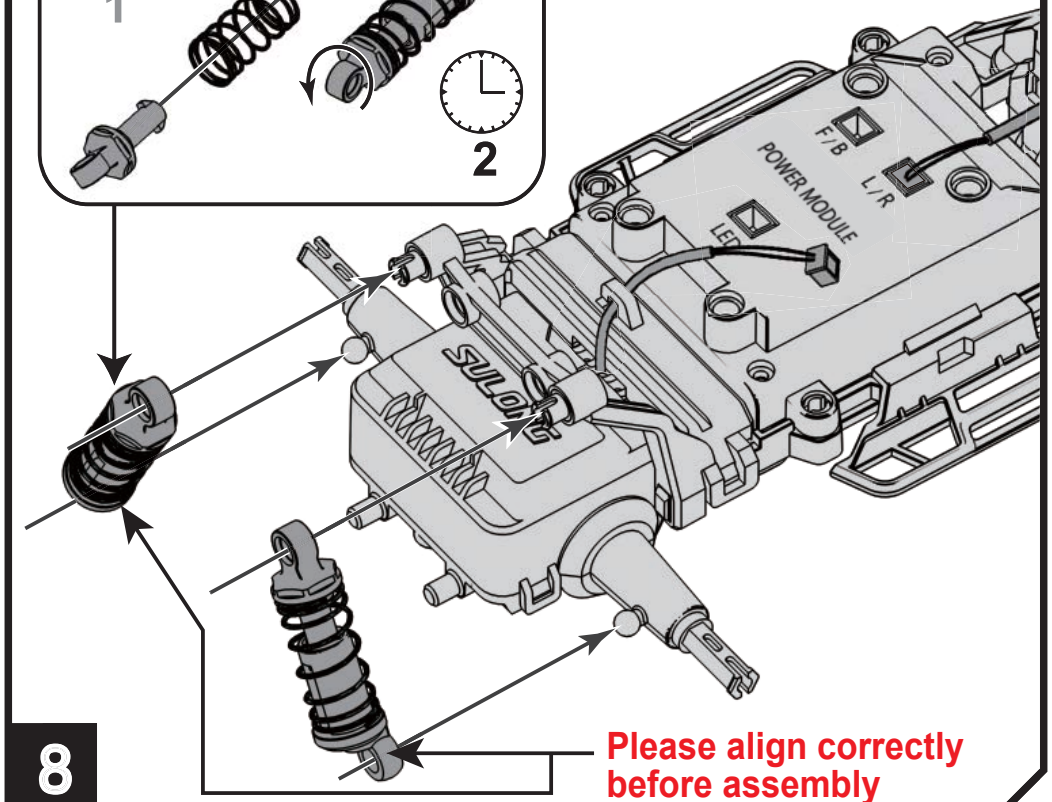

Please align correctly before assembly

8

ASSEMBLY-REQUIRED ACCESSORIES

Insert the driver module lead wire into the port of the battery module F/B

STEP-BY-STEP ASSEMBLY INSTRUCTIONS

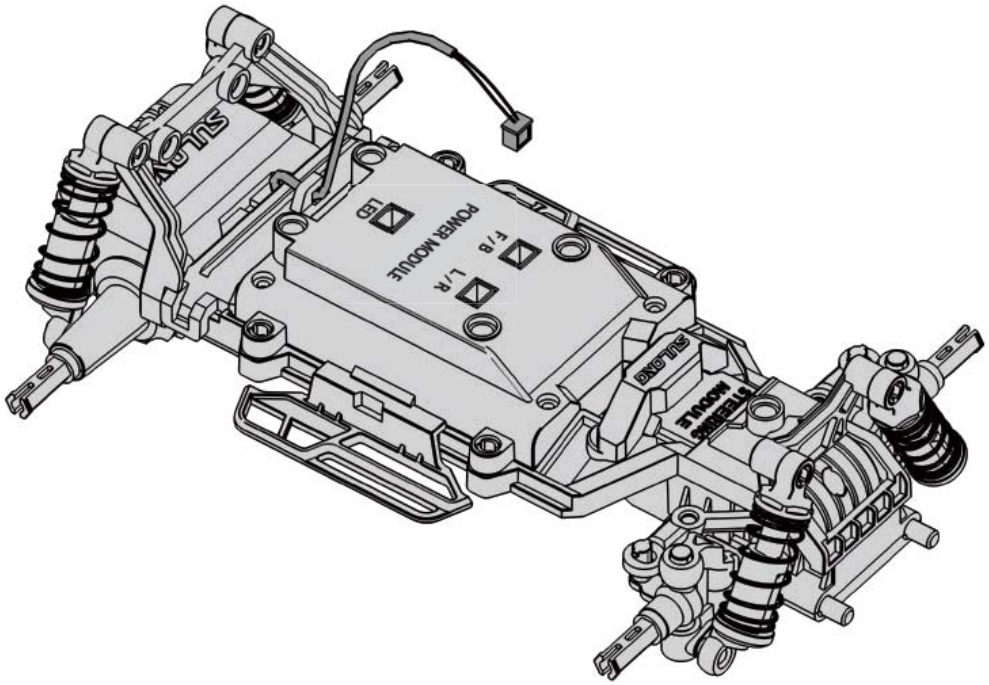

9

VEHICLE DIAGRAM

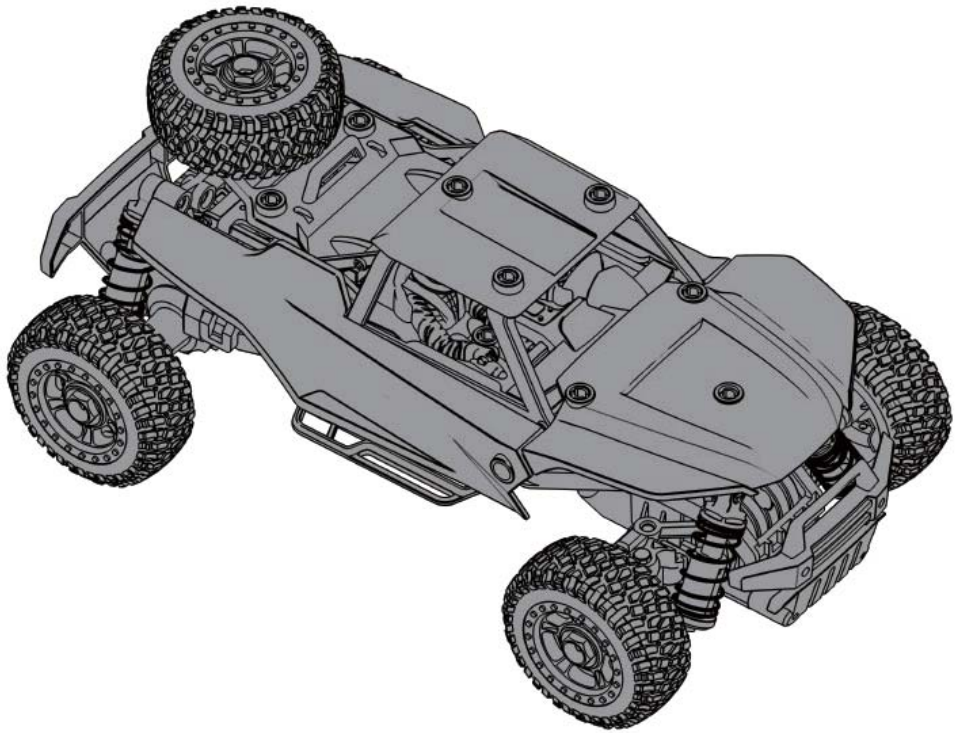

ASSEMBLY-REQUIRED ACCESSORIES

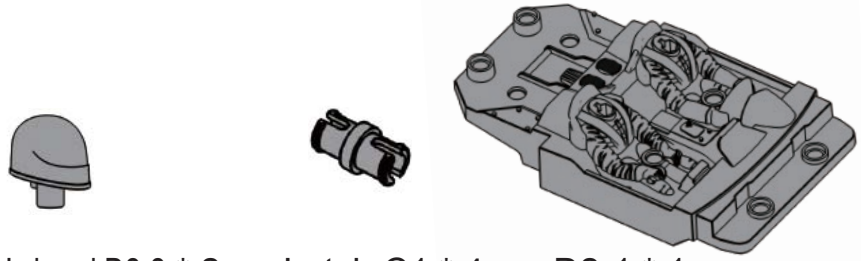

Driver's head D2-2 * 2 Latch C1 * 4 D2-1 * 1

STEP-BY-STEP ASSEMBLY INSTRUCTIONS

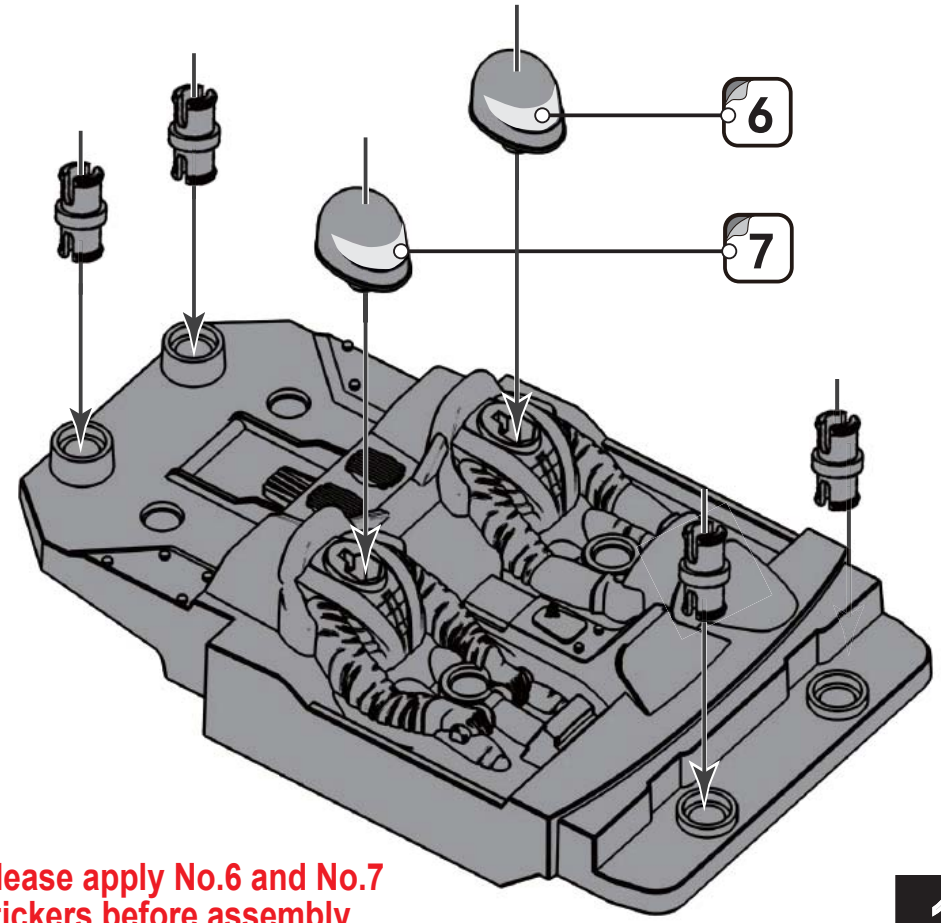

Please apply No.6 and No.7 stickers before assembly

1

ASSEMBLY-REQUIRED ACCESSORIES

Latch C1 * 2

K6-5 * 1

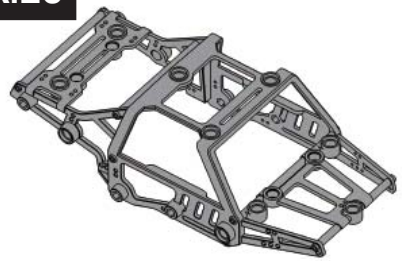

Vehicle Frame G2* 1

STEP-BY-STEP ASSEMBLY INSTRUCTIONS

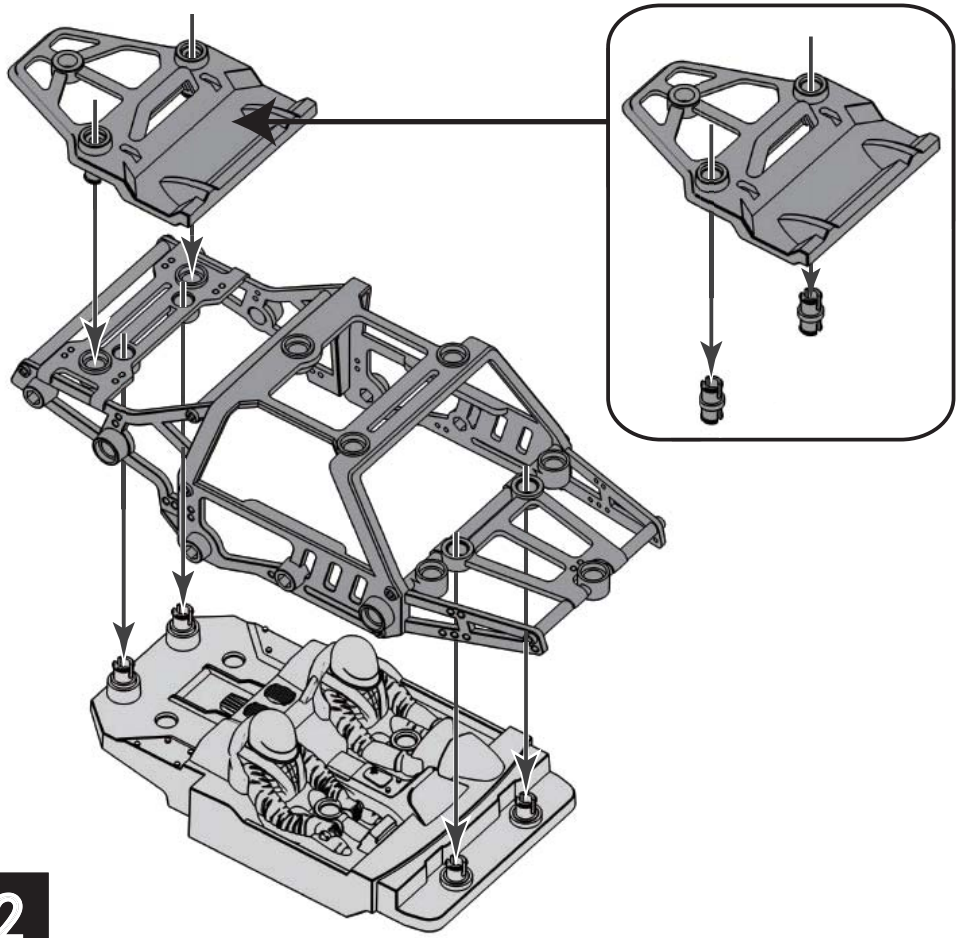

2

ASSEMBLY-REQUIRED ACCESSORIES

Latch C1 * 2

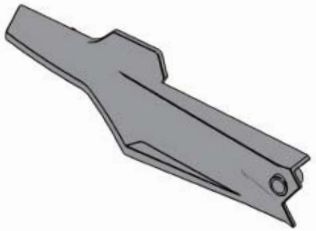

Left Door K6-4 * 1

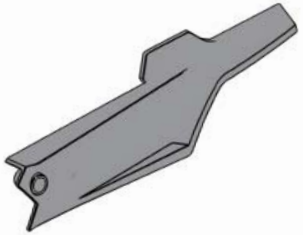

Right Door K6-3 * 1

STEP-BY-STEP ASSEMBLY INSTRUCTIONS

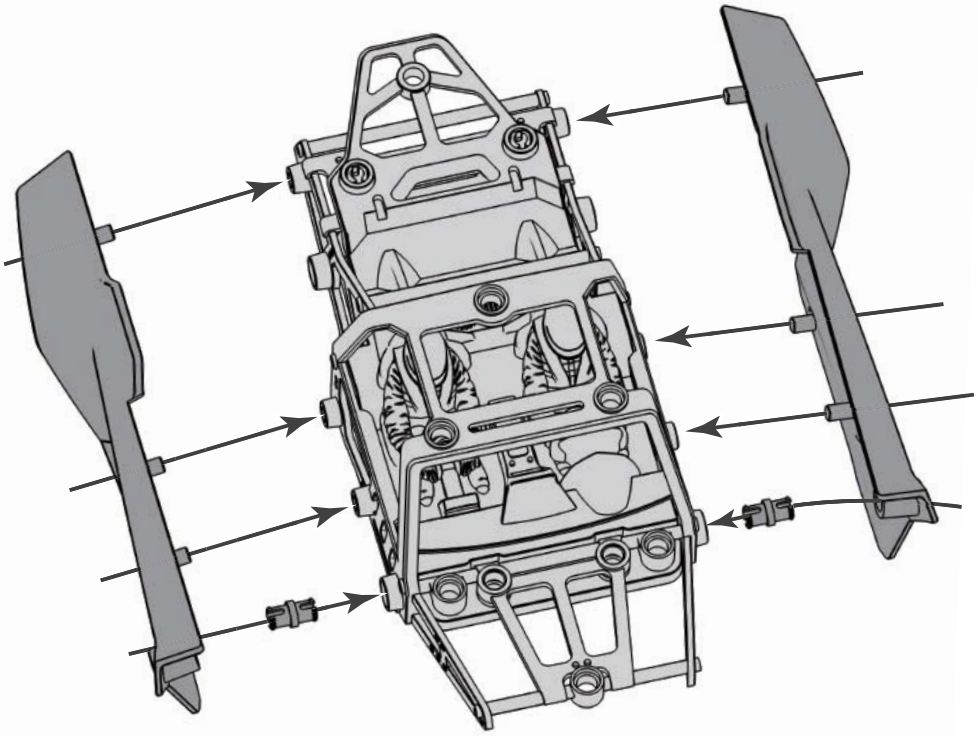

3

ASSEMBLY-REQUIRED ACCESSORIES

Latch C1 * 3

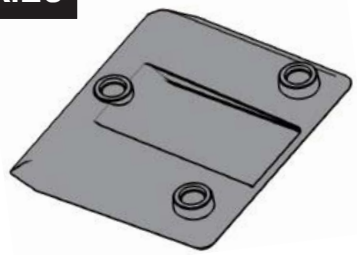

Car Roof Casing K6-2 * 1

STEP-BY-STEP ASSEMBLY INSTRUCTIONS

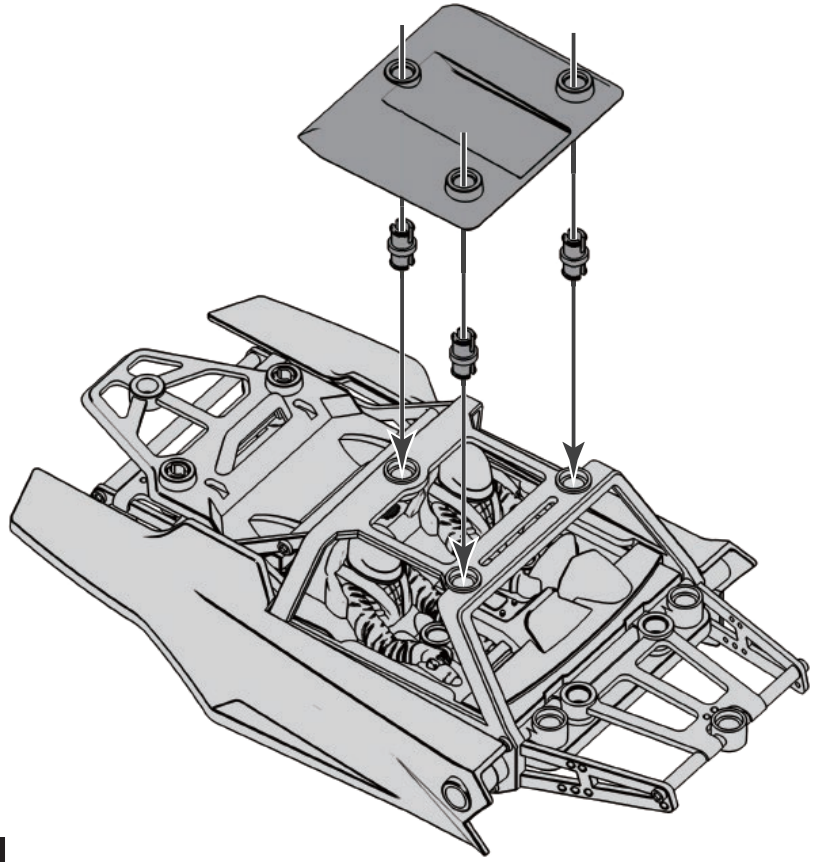

4

ASSEMBLY-REQUIRED ACCESSORIES

Latch C1 * 3

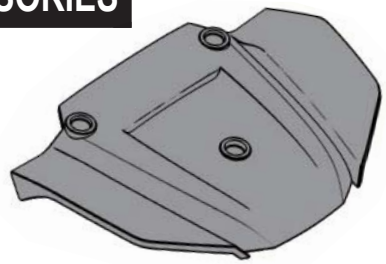

Headstock Casing K6-1 * 1

STEP-BY-STEP ASSEMBLY INSTRUCTIONS

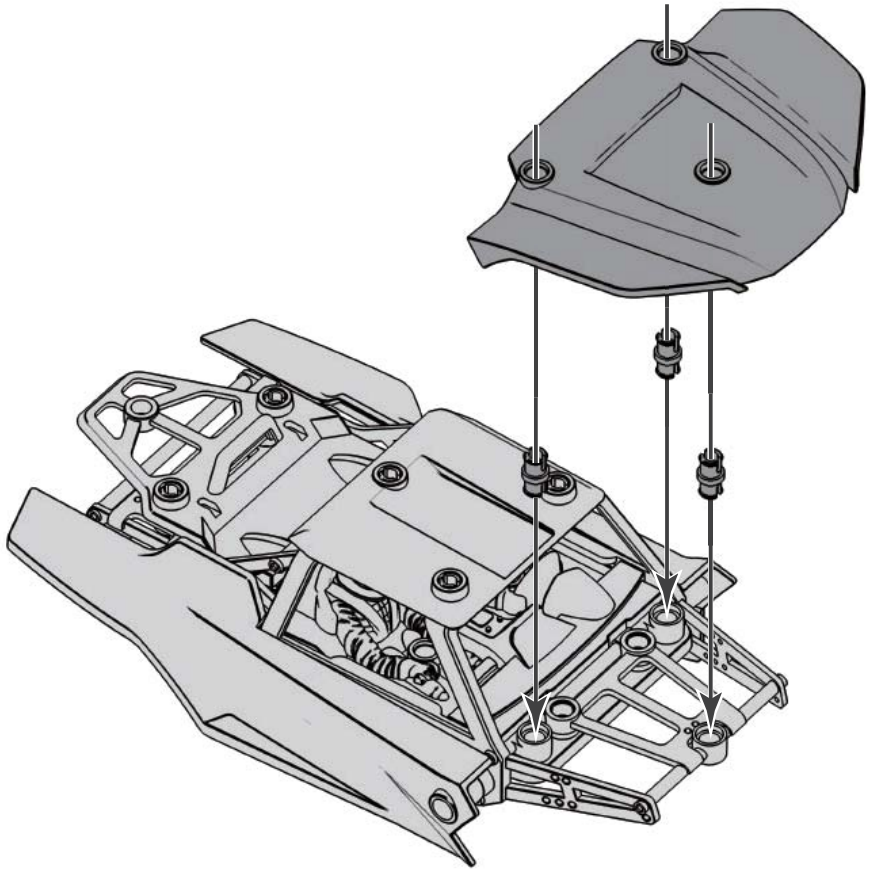

5

ASSEMBLY-REQUIRED ACCESSORIES

Latch C1 * 4

STEP-BY-STEP ASSEMBLY INSTRUCTIONS

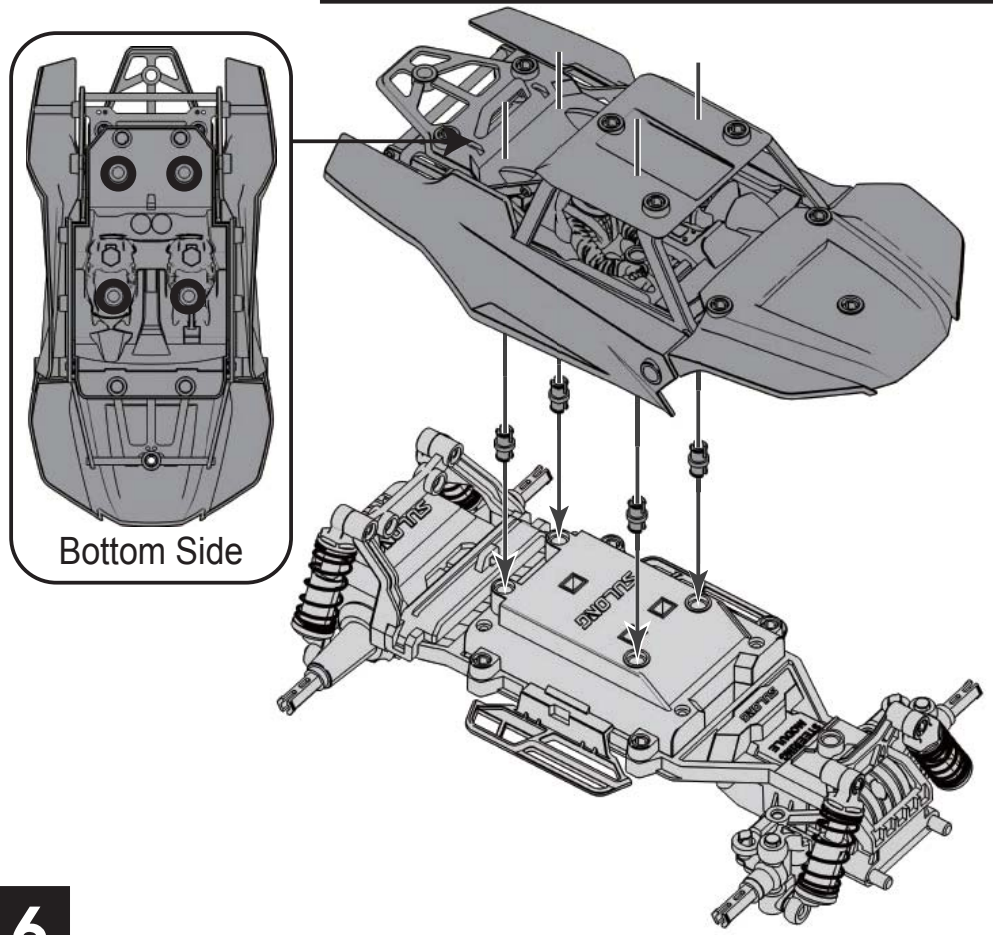

6

ASSEMBLY-REQUIRED ACCESSORIES

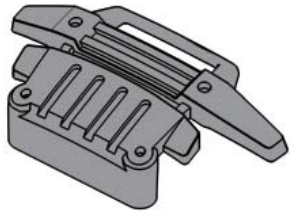

Front Bumper F4-1 * 1

STEP-BY-STEP ASSEMBLY INSTRUCTIONS

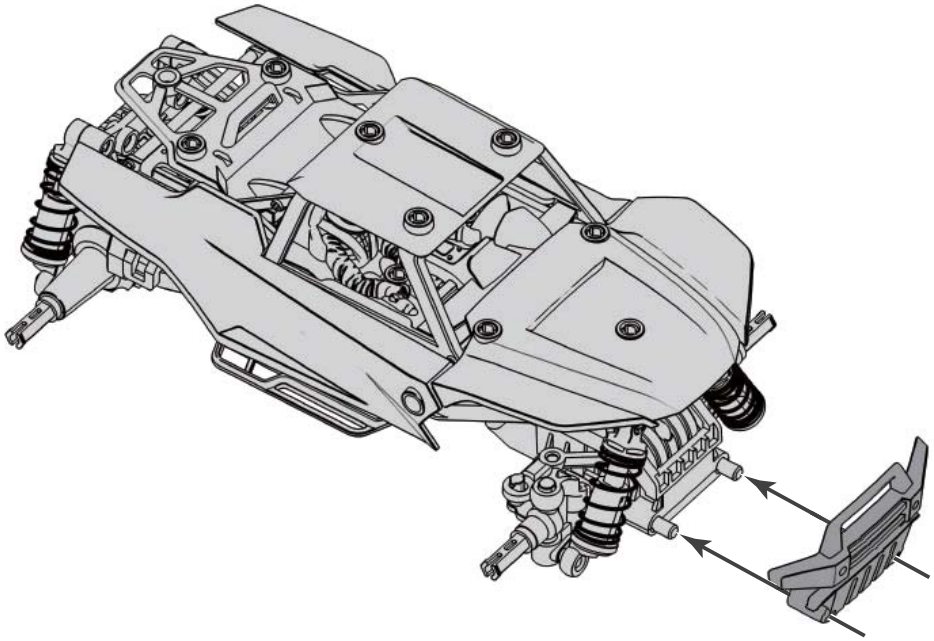

7

ASSEMBLY-REQUIRED ACCESSORIES

Latch F6-6 * 1

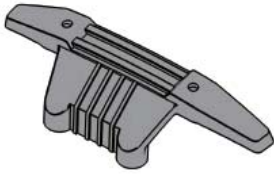

Rear Bumper F4-2 * 1

Wheel *1

STEP-BY-STEP ASSEMBLY INSTRUCTIONS

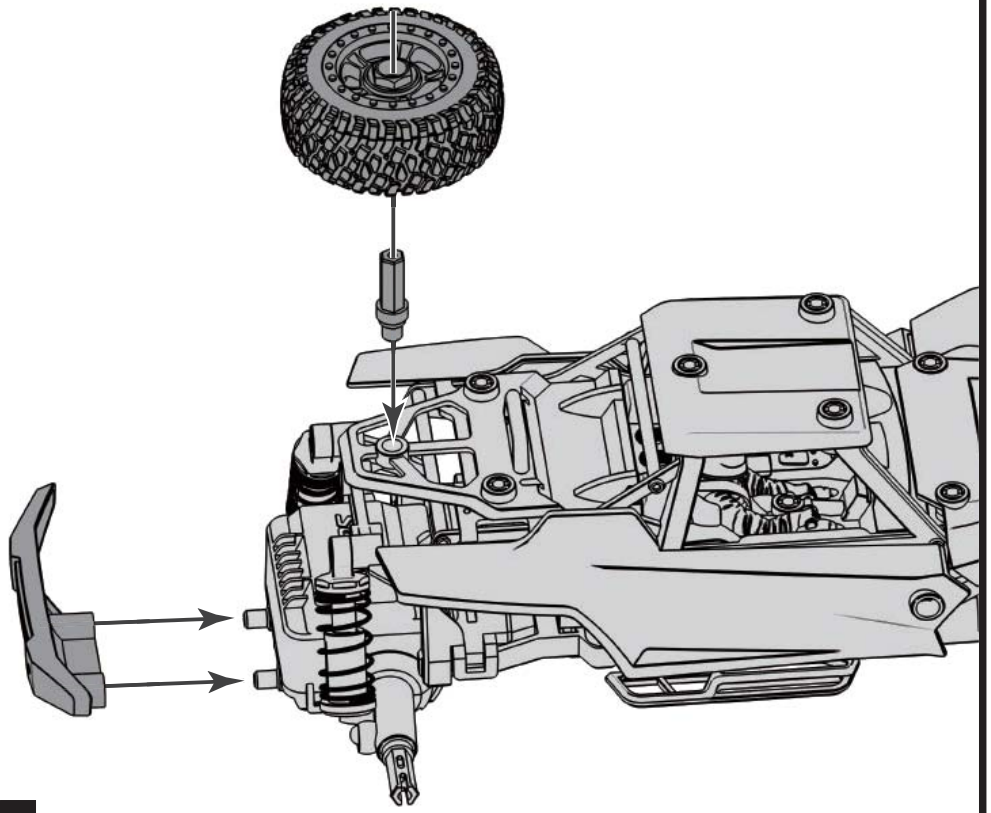

8

ASSEMBLY-REQUIRED ACCESSORIES

Wheels * 4

STEP-BY-STEP ASSEMBLY INSTRUCTIONS

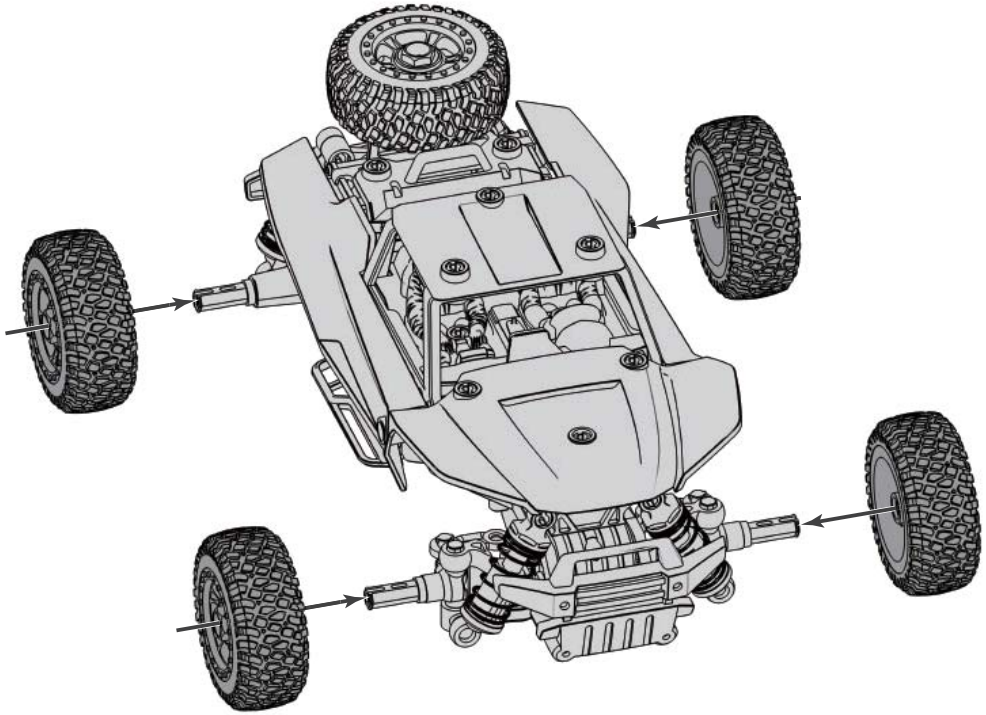

9

ABOUT THE REMOTE CONTROLLER

REMOTE CONTROLLER

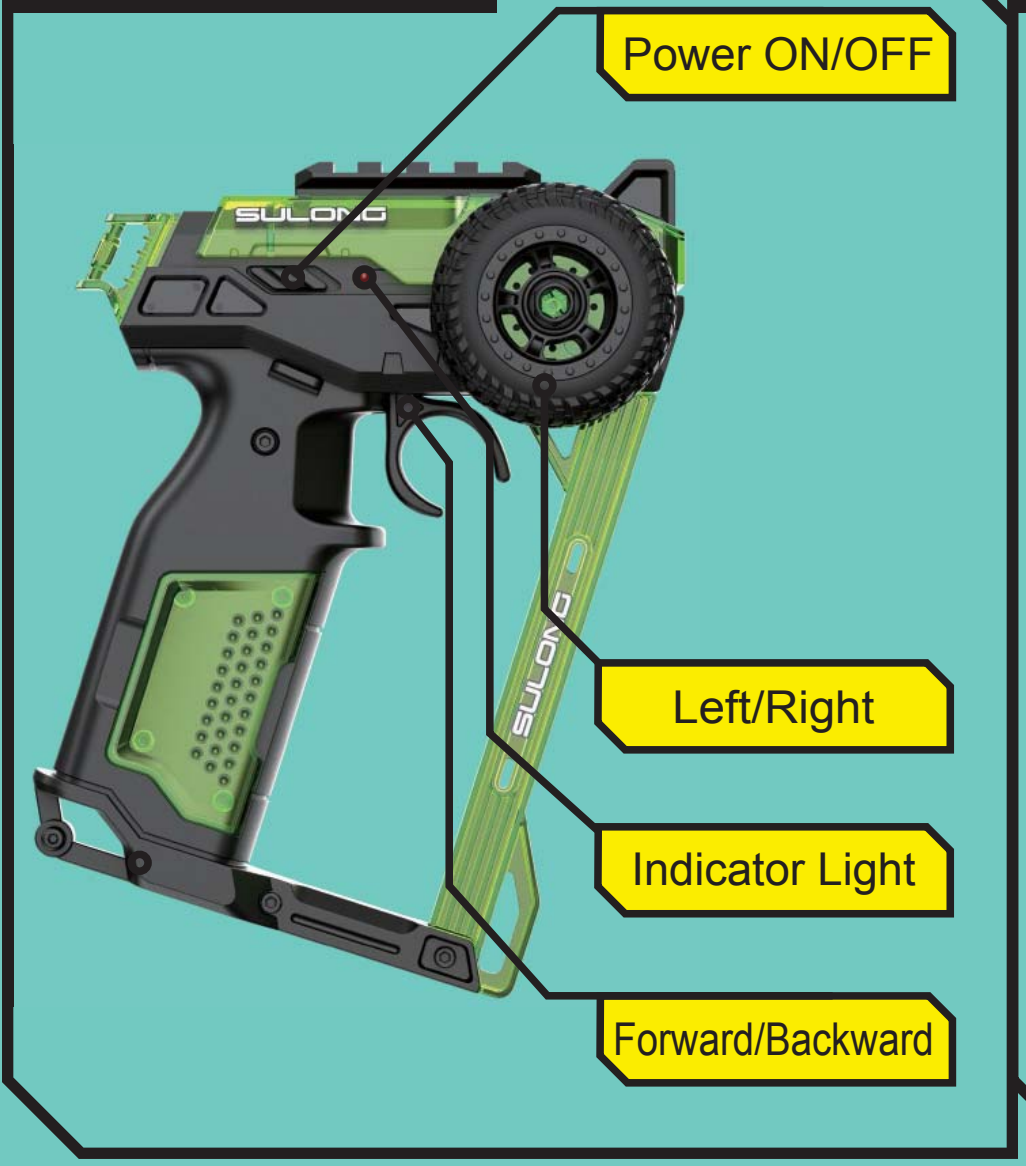

BATTERY INSTALLATION

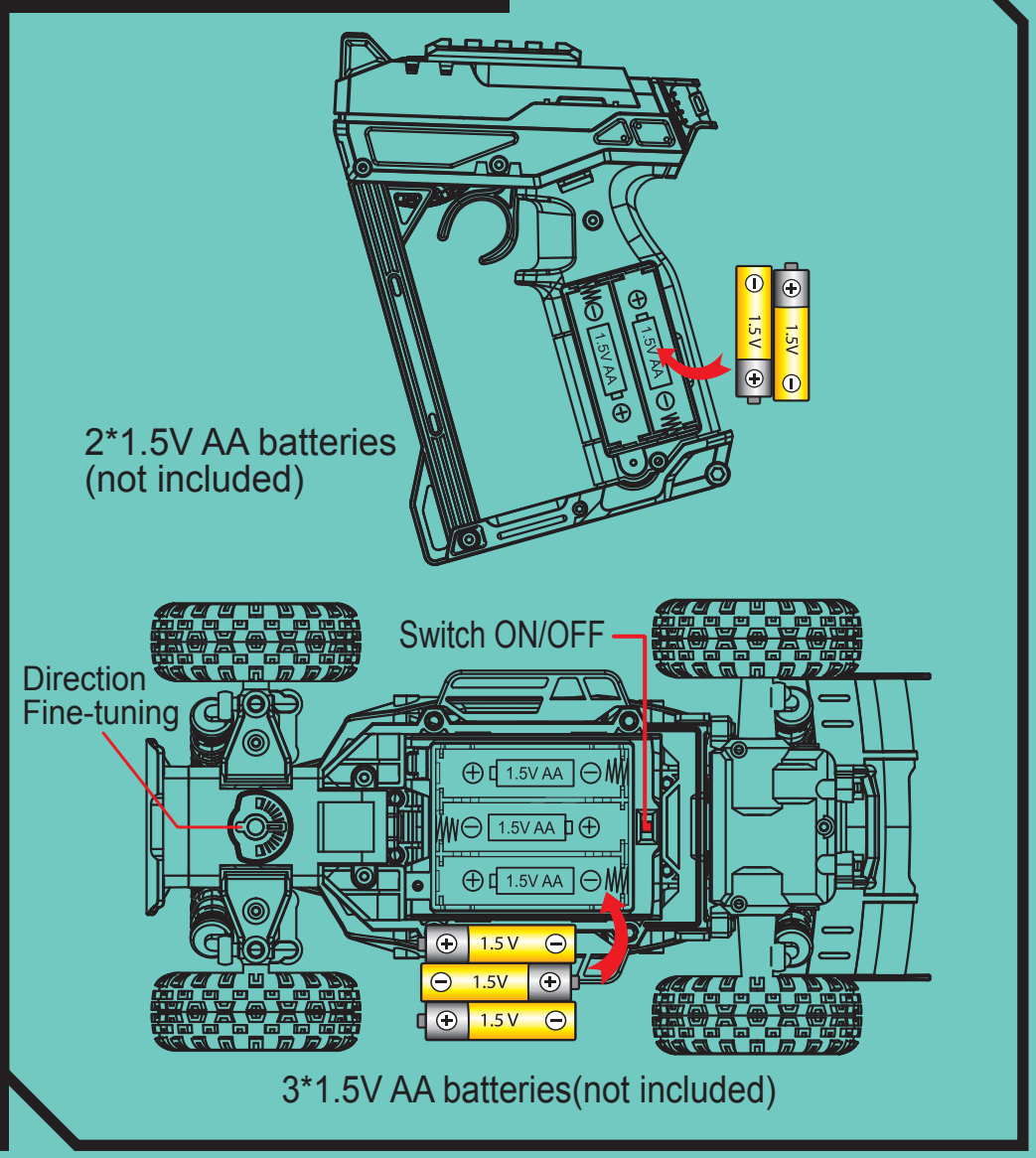

SULONG TOYS