YESOUL
野小兽

S3
Spinning bike

Before using this product,
carefully read
and properly keep this manual.

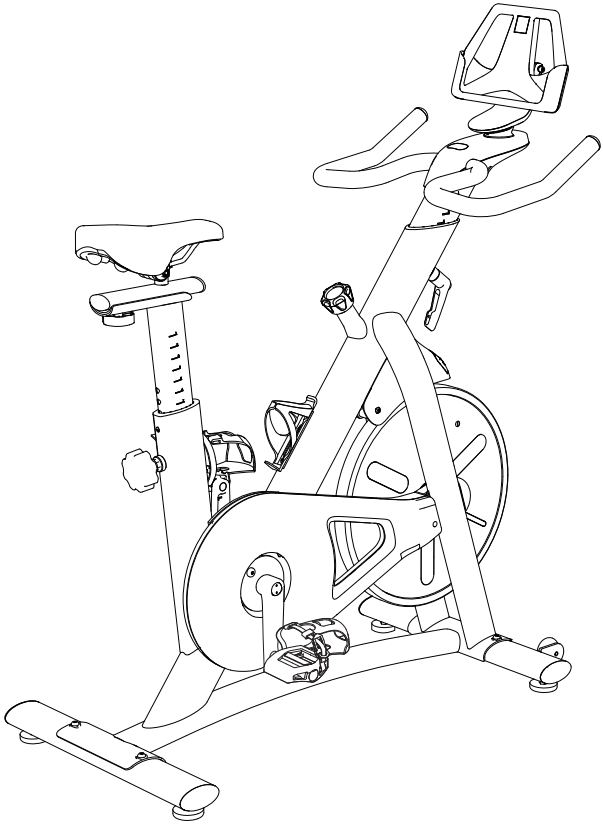

YESOUL SMART CYCLING

S3 Product Manual

Product model: YS-001

YESOUL Smart Spinning Bike S3

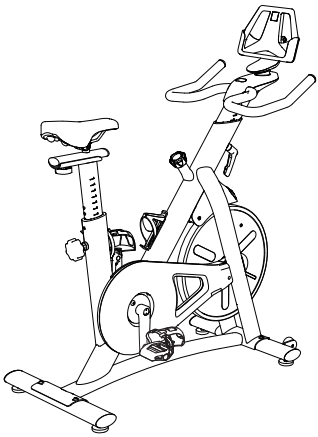

Product parameter

Tablet (mobile phone) holder size	Maximum tablet width: 260mm
Supporting software version	iOS 10.0 or higher, Android 5.0 or higher
Resistance system	Magnetron resistance system
Drive mode	Belt drive
Power supply	Button battery (model: CR2477)
Sensing system connection	Bluetooth
Height limit	150 ~ 195cm
Rated maximum load	120kg
Net weight	31kg
Gross weight	36kg
Overall dimensions	(length) 1010 × (width) 510 × (height) 1165 (mm)

Important Safety Instructions

⚠ Please read them carefully. Improper use may result in personal injury or death!

1. Make sure that the saddle height adjustment knob is secured correctly, and will not affect motion during exercise.
2. Keep children and pets away from this product. This product is for those over 16 years old only.
3. Never stretch any object or body part into the openings of the bike.
4. The weight of the user must not exceed the maximum load.
5. Get off the bike until flywheel and pedals stop rotating. Otherwise, severe injuries may be caused due to control failure.
6. If you feel any discomfort, such as dizziness or breathing difficulty, stop riding the bike and carefully get off.
7. Never turn pedals by hand or touch any rotating mechanical part; otherwise, personal injury may be caused.
8. Keep the body hydrated as needed during riding.
9. Use this product according to the instructions in this manual. Warm up fully before exercise.
10. Without the preliminary determination of baseline fitness level and medical certificate signed by a doctor, never be engaged in high-speed or high-intensity sports. Before attempting any high-intensity short sprints, pay attention to the body state and posture, and apply a controllable speed.
11. Wear professional cycling clothes or tight-fitting sportswear and sports shoes, and tighten foot straps to avoid injury caused by pulling or entanglement by this product.
12. Never use this product with inappropriate shoes or barefoot.
13. Incorrect or excessive training may cause injury.
14. Check whether the bike for loosening or damage before each use.
15. Never refit this bike or use non-original accessories without permission. The casing must be opened by professionals, in order to avoid damage.
16. Those pregnant or with high blood pressure, heart disease, lumbar spondylosis or reduced mobility must not use this product without the permission of doctors.
17. In case of any discomfort such as dizziness or chest pain during exercise, stop exercising immediately and go to a hospital for examination.
18. If the product fails, immediately stop using it.
19. This product must not be used for medical rehabilitation.
20. Use this product on a flat and clean ground.
21. Carry out preventive maintenance regularly.
22. Never expose this product in a humid place. This product must not be used outdoor or in any humid place.

Installation Guide - List of Parts

STEP 1: Check of parts

List of Parts

NO.	
①	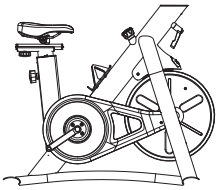 Frame
②	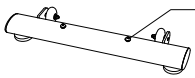 2×hexagon socket button head screw M8×45/washer Front tube
③	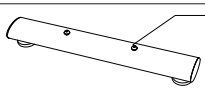 2×hexagon socket button head screw M8×45/washer Rear tube
④	Pedal (left: L; right: R)
⑤	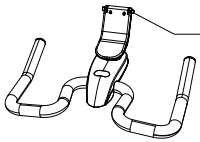 2× hexagon socket cap screw M6×16/washer Handlebar assembly
⑥	Tablet (mobile phone) holder
⑦	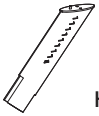 Head tube
⑧	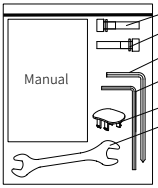 2× hexagon socket cap screw M8×45 2× washer L-shaped cross head hexagon wrench 6# Hex wrench, 5# Decorative cover Open-ended wrench Ziplock bag (manual, tools)

Installation Guide

STEP 2: Installation of bottom tube

1. Take the hex wrench (6#) out of the ziplock bag.
2. Remove four screws (M8×45) and washers of the bottom tube via the wrench.

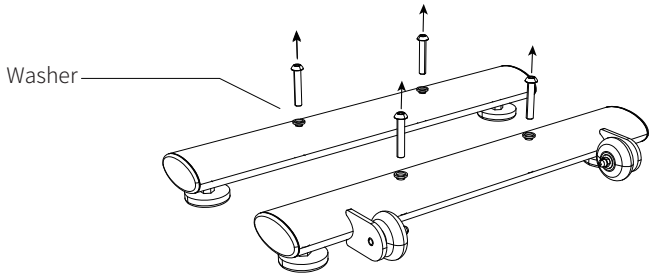

3. Align the hole of the bottom tube with the bottom hole of the frame, manually screw the bottom tube into frame, and tighten it via the wrench.

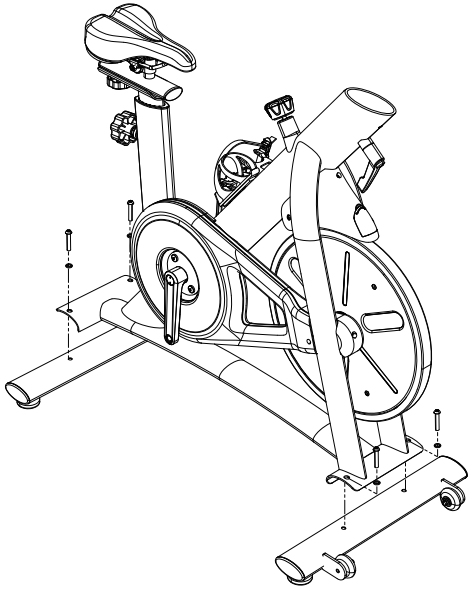

Installation Guide

STEP 3: Installation of head tube

1. While holding the head tube with one hand, pull out the adjusting handle with the other hand.

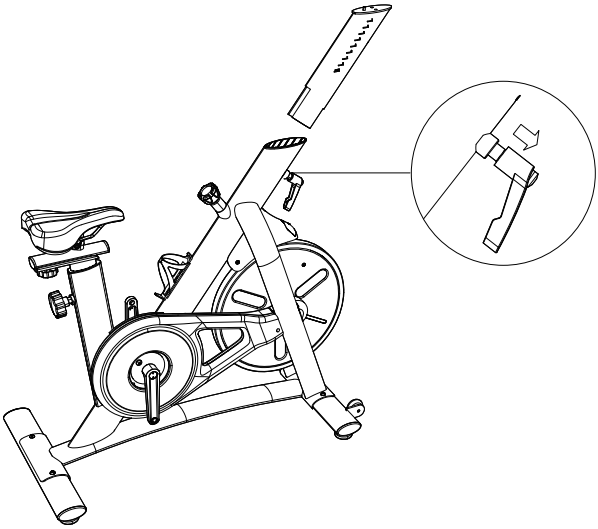

2. Insert the head tube into the body, and keep the scale parallel to the top surface of the tube. Loosen the adjusting handle and clamp the head tube into the slot. Then tighten the handle to the right.

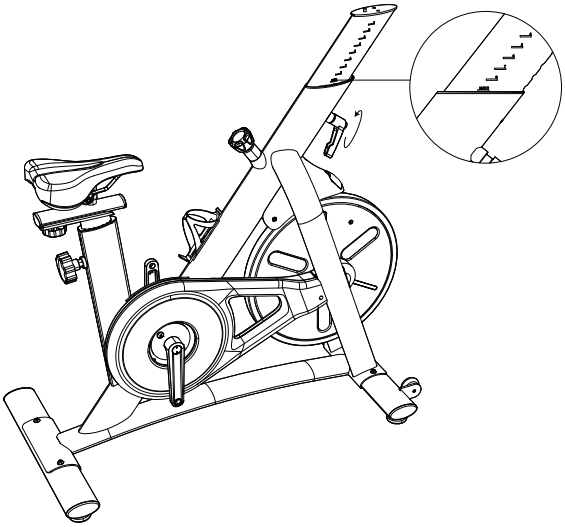

Installation Guide

STEP 4: Installation of handlebar assembly

1. Take two hexagon socket cap screws (M8×45) and washers out of the ziplock bag.
2. Align the handlebar assembly with the hole from top to bottom, and manually fasten screws into the holes.
3. Lock the screws with the 6# hex wrench.

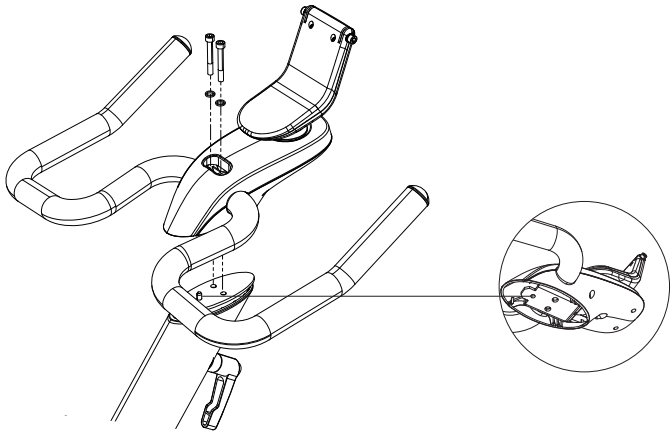

4. Fasten the small decorative cover onto the handlebar assembly.

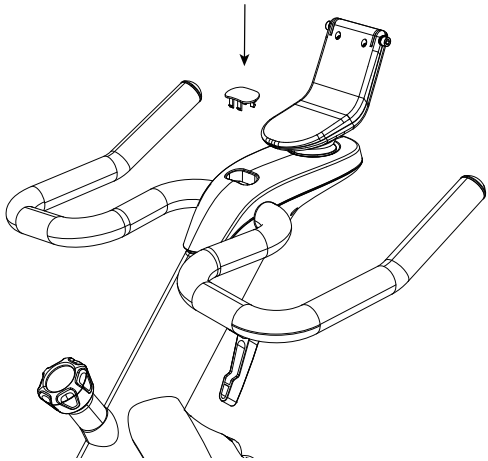

Installation Guide

STEP 5: Installation of tablet (mobile phone) holder

1. Take the hex wrench (5#) out of the ziplock bag.
2. Remove the screws (M6×16) and washers of the handlebar assembly via the wrench.

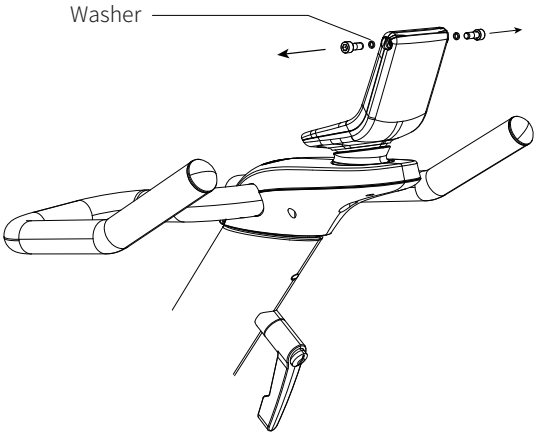

3. Insert the tablet (mobile phone) holder into the slot of the handlebar assembly, manually fasten the screws into holes, and lock them via the wrench.

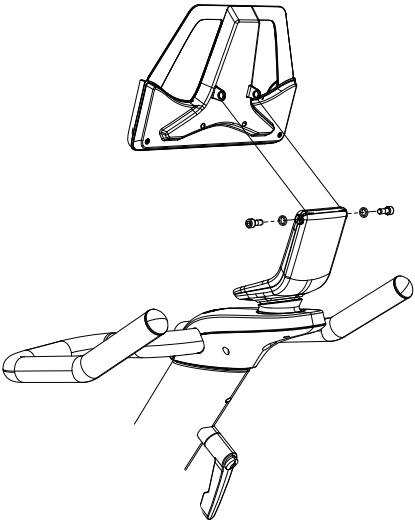

Installation Guide

STEP 6: Pedal installation

Manually screw the pedals onto cranks toward the head direction, and tighten them with the open-ended wrench.
There are two pedals: left (L) and right (R).

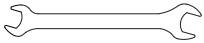

Open-ended wrench (in the ziplock bag)

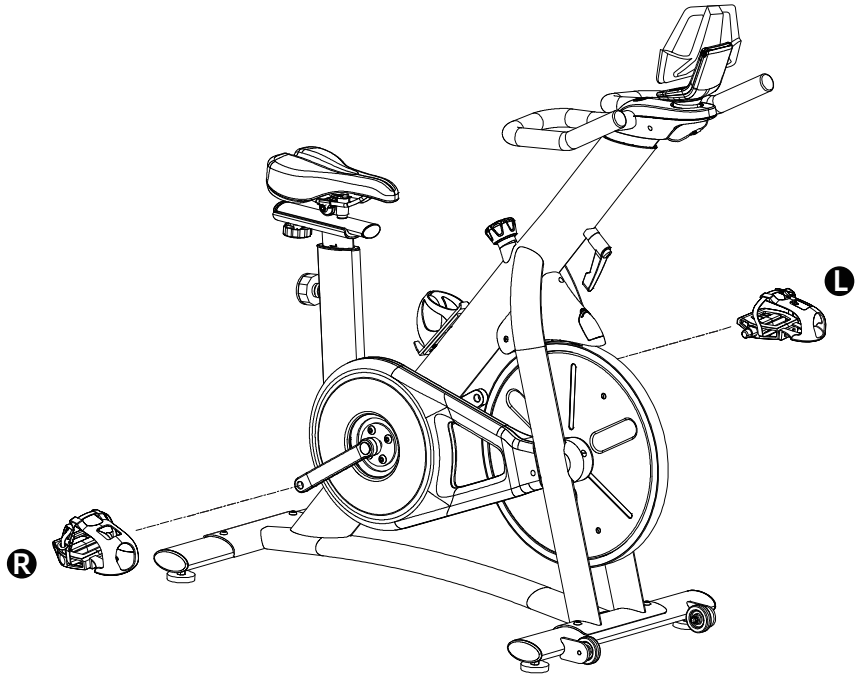

Safety tips:

Reverse riding is not recommended, as it is likely to loosen pedals. After reverse riding, check whether the pedals are locked, in order to avoid safety issues arising from loose pedals.

Installation Guide

STEP 7: Battery Dismantling and Installation

1. If the bike is provided with a battery, pull the insulation strip out of the gap of the battery cover before using this product.
2. Battery replacement: Open the battery cover, and take out the circuit board (never forcibly pull it as its back wire is connected to the body) of the battery holder. Remove the old battery, and insert a new battery into the battery slot, with its positive pole outward (“+” outward). Close the cover.

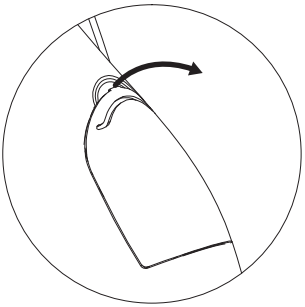

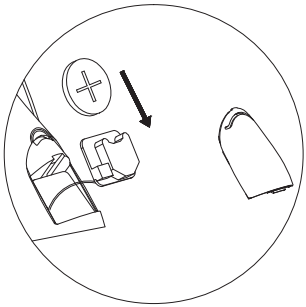

Installation Guide (for reference only, subject to the actual product)

Safety tips:

Adjust the bike and tighten the body tightening knob as needed before using it.

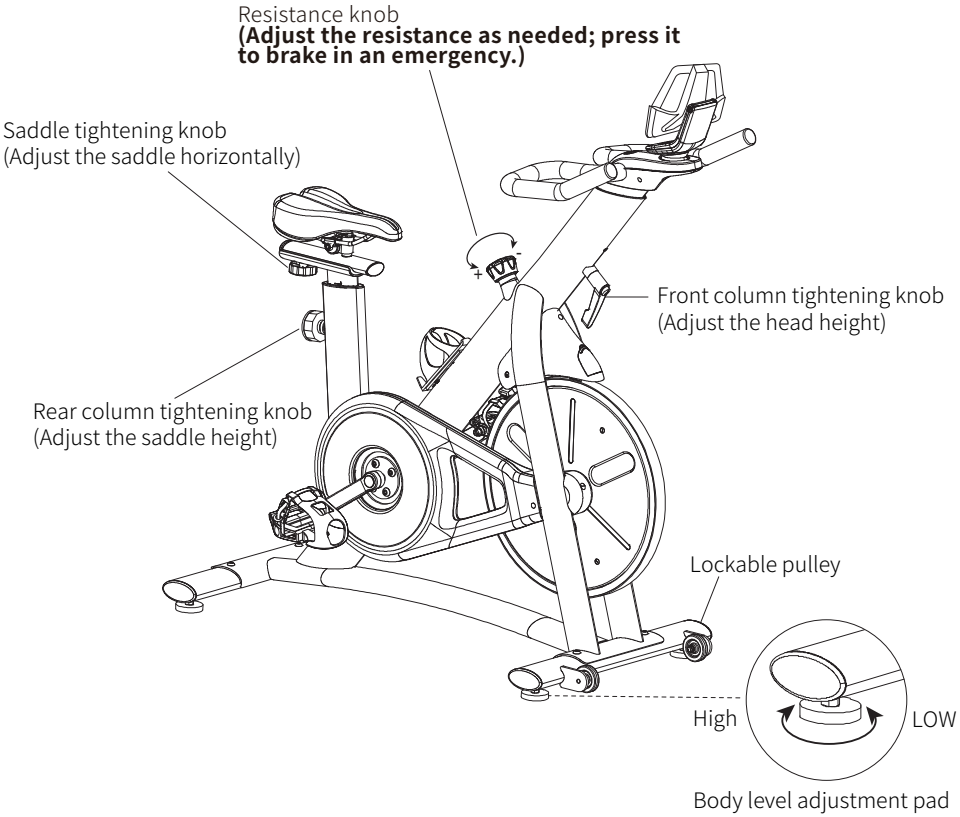

Statement:

This manual contains the functional introduction and operating instructions as much as possible when printed.
With the continuous improvement of hardware and software and optimization of design, this manual may be inconsistent with the purchased product. In case of any discrepancy in appearance, interface and color, the actual product shall prevail.

First Use

Scan the QR code to download YESOUL APP

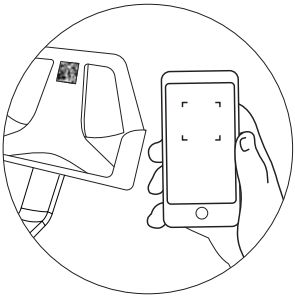

YESOUL

1. Registration

Download the APP and complete registration according to the prompts..

2. Bike connection

First, make sure that the Bluetooth function of the mobile phone/tablet is enabled.

1. Open the APP, and ride the bike for some time to activate its Bluetooth. Click the bike icon, search, and select the bike name (e.g. “YSS300001”). Wait until a connection is established.

2. Open the APP, and click to start training. Ride the bike for some time to activate its Bluetooth. Click the bike icon, and search and select the bike name (e.g. “YSS300001”). Wait until a connection is established.

· After the first connection, the APP will automatically match the bike. Directly ride the bike when it is used for the second time.

·The bike does not support the simultaneous connection of multiple mobile phones. Before using this product, make sure that other users are not connected to the bike.

·The bike will be disconnected 10 min after riding.

·In addition to connection with YESOUL APP, the Bluetooth can also be connected with kinomap and zwift software.

Connection with Heart Rate Armband

3.Connection with Heart Rate Armband

First, make sure that the Bluetooth function of the mobile phone/tablet is enabled. Wear the heart rate armband as required.
1. Open the APP, click the heart rate armband icon, and search and select the heart rate armband name (e.g. “YSB170900001”). Wait until a connection is established.
2. Open the APP, and click to start training. Click the heart rate armband icon, and search and select the heart rate armband name (e.g. “YSB170900001”). Wait until a connection is established.
Check whether the connection is established successfully. Open the course video. If the heart rate is displayed, it means that the connection has been established successfully.

How to Adjust Bike

1 - Handlebar height adjustment:

Loosen and pull out the front column knob with one hand, hold the middle part of the handlebar with the other hand, and lift the handlebar to the desired position. Then release the knob, and gently pull the column up and down until the spring is automatically reset (when a “click” sound is heard, it means that the knob has been clamped in the hole of the column). Tighten the knob as much as possible.

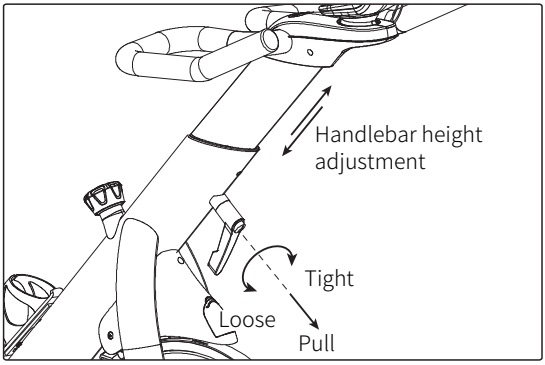

2 - Saddle height adjustment:

Loosen and pull out the rear column knob with one hand, and lift (or press) the saddle with the other hand to the desired position. Loosen the knob and gently pull the column up and down until the spring is automatically reset (when a “click” sound is heard, it means that the knob has been clamped in the hole of the column). Tighten the knob as much as possible.

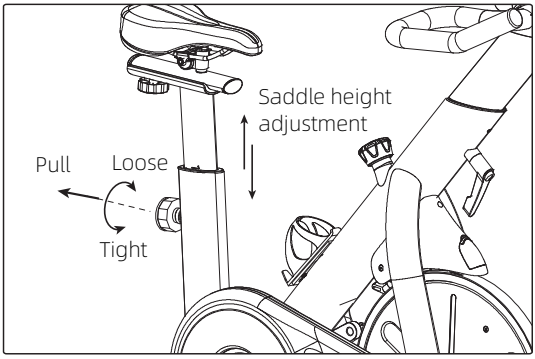

How to Adjust Bike

3 - Horizontal adjustment of saddle:

Loosen the knob under the saddle, slide the saddle back and forth to the desired position, and tighten the knob as much as possible.

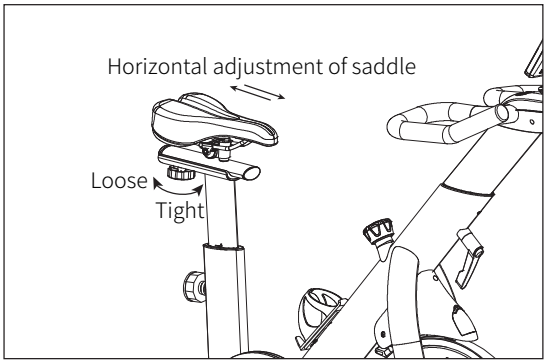

4 - Body level adjustment:

There are four adjustment pads at the bottom of the front and rear pedal tubes. Screw these pads until they are tightly secured on the floor and the body does not shake.

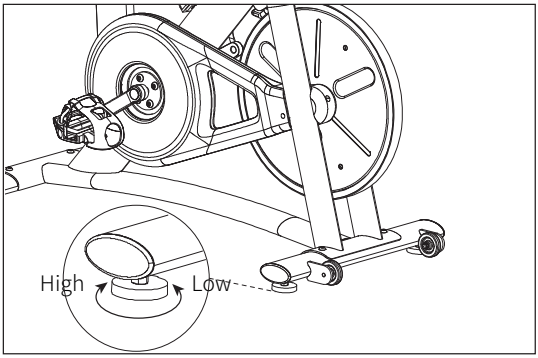

How to Determine Correct Riding Posture

1 - Setup of appropriate handlebar height

Each user can set up the appropriate handlebar height based on his or her body height and riding experience.
Recommendation: The handlebar should be slightly higher than the saddle for new users (Fig. 1) and flush with or slightly lower than the saddle for experienced users (Fig. 2).
Users subject to lumbar muscle strain and lumbar spondylosis may ride the bike with the consent of doctors. It is recommended to adjust the handlebar into a higher position.

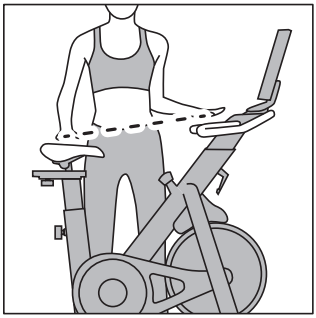

(Fig. 1)

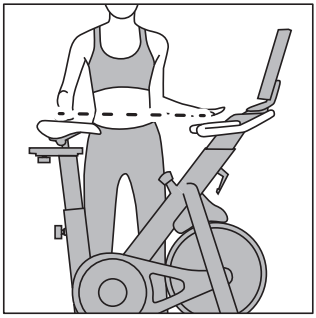

(Fig. 2)

2 - Setup of correct saddle position

2.1 - Saddle height
Put the feet together, stand on one side of the saddle and adjust the saddle to the hip height (Fig. 3). Then site on the saddle, and step on the pedals forcibly until they are stopped at 6 o’ clock and the leg can be fully stretched (Fig. 4).

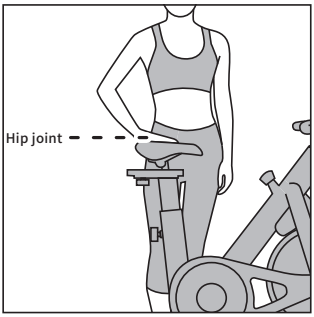

(Fig. 3)

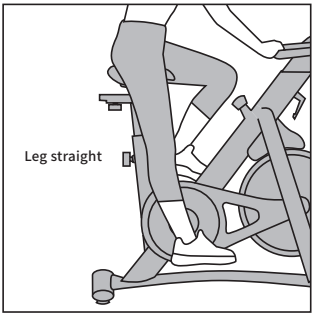

(Fig. 4)

How to Determine Correct Riding Posture

3 - Setup of correct saddle position

2.2 - Horizontal position of saddle
Put the right foot into the clamp, and step on the pedals, until the right pedal is at 3 o’ clock and the front side of the knee joint is on the same vertical line as the pedal, that is, the saddle is in the correct position (Fig. 5).

3 o’ clock: the right crank is parallel to floor in the right direction

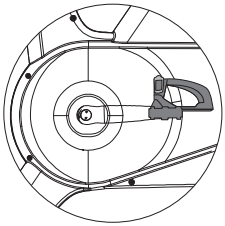

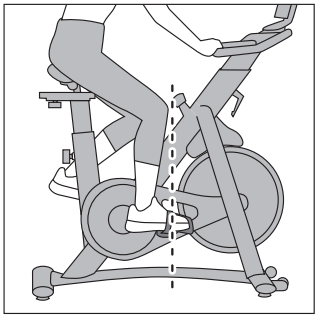

(Fig. 5)

4 - Handle position layout of spinning bike

During riding, coaches will show the corresponding hand positions, i.e. the corresponding parts of the handlebar, as shown below.

❶ Hand position 1

❷ Hand position 2

❸ Hand position 3

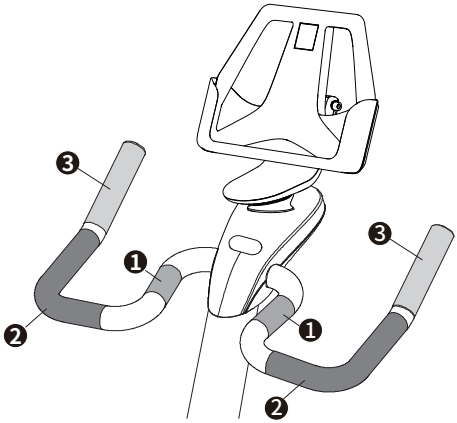

Routine Maintenance

Daily use:
Keep the spinning bike on a dry, ventilated and flat floor. If not used in a long time, the bike should be covered to keep its body clean and tidy.

Frame maintenance:
Wipe off sweat on the frame with cloth after exercise. Do not wipe the bike with wet cloth, in order to avoid rusting.

Belt maintenance:
Check the belt pulley for cracking and deviation, and adjust or replace the belt in time. Regularly clean the belt groove to prevent the belt from jumping out of the groove.

Inspection of body screws:
Always check the screws of all body parts for loosening or falling, and tighten or replace them in time.

Inspection of resistance adjustment knob:
Always check the resistance adjustment knob for loosening or falling. Check whether the resistance is reasonable, so as to calibrate resistance in time.

Inspection of pedals and cranks:
Always check the screws of pedals and cranks for loosening, and tighten them in time.
Saddle maintenance:
Always check whether the saddle is loose and tighten it in time. Wipe the saddle with cotton cloth to keep it dry.

This device complies with Part 15 of the FCC Rules. Operation is subject to the following two conditions: (1) this device may not cause harmful interference, and (2) this device must accept any interference received, including interference that may cause undesired operation

NOTE: This equipment has been tested and found to comply with the limits for a Class B digital device, pursuant to Part 15 of the FCC Rules. These limits are designed to provide reasonable protection against harmful interference in a residential installation. This equipment generates, uses and can radiate radio frequency energy and, if not installed and used in accordance with the instructions, may cause harmful interference to radio communications. However, there is no guarantee that interference will not occur in a particular installation.
If this equipment does cause harmful interference to radio or television reception, which can be determined by turning the equipment off and on, the user is encouraged to try to correct the interference by one or more of the following measures:
-- Reorient or relocate the receiving antenna.
-- Increase the separation between the equipment and receiver.
-- Connect the equipment into an outlet on a circuit different from that to which the receiver is connected.
-- Consult the dealer or an experienced radio/TV technician for help.

Warning: changes or modifications not expressly approved by the party responsible for compliance could void the user's authority to operate the equipment