USER MANUAL MODEL:E0666TH

# Outdoor Remote Sensor

We thank you for your purchase of Outdoor Remote Sensor.It has been designed and constructed using innovative components and techniques to enable the perfect display. Please read the instructions carefully to become familiar with the properties and functions before you use the unit.

For the start-up of this device: by 2 x AA batteries (not included)

# OVERVIEW

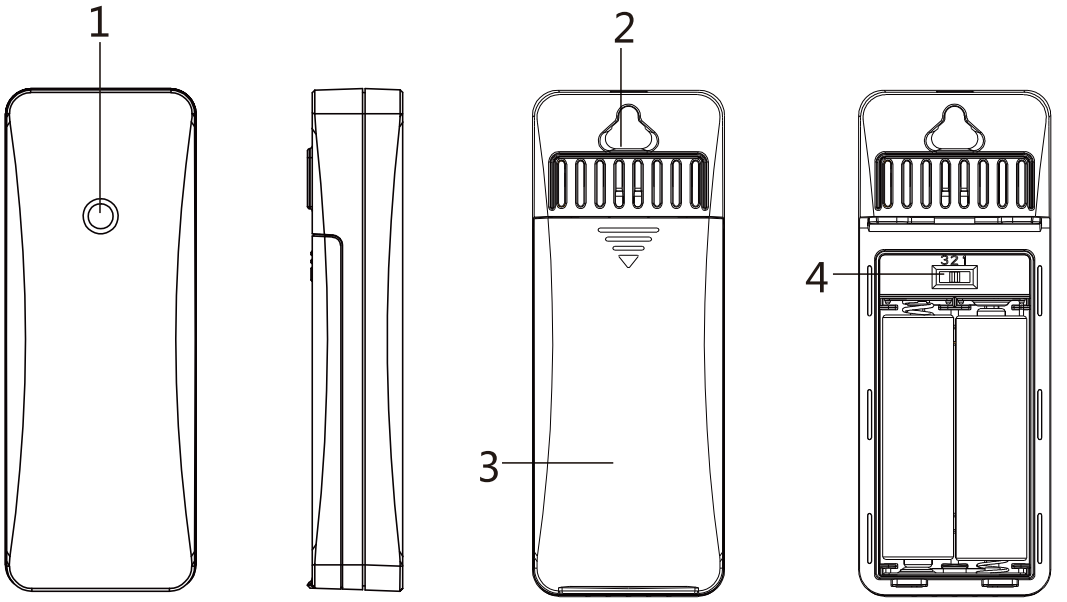


1. Signal light
2. Hanging hole
3. Battery compartment
4. Channel 1-2-3 switch

# QUICK SET-UP GUIDE

**Hint**: Use good quality Alkaline Batteries and avoid rechargeable batteries.

1. Have the indoor station and outdoor remote 3 to 5 feet apart.
2. Batteries should be out of both units for 10 minutes.
3. Place the batteries into the outdoor remote first then into the indoor station.
   (All outdoor remotes must be started before the indoor station)
4. DO NOT PRESS ANY BUTTONS FOR 10 MINUTES.

In this time the display and sensor will start to talk to each other and the display will show both the indoor & outdoor temperature and humidity. If the station does not display both temperatures and humidity after the 10 minutes please retry the set up as stated above. After both indoor and outdoor temperatures and humidity are displayed for 10 minutes you can place your sensor outdoors and set your time.

The remote sensor should be placed in a dry, shaded area. The remote sensor has a range of 80 feet. Any walls that the signal will have to pass through will reduce distance. An outdoor wall or window will have 20 to 30 feet of resistance and an interior wall will have 10 to 20 feet of resistance. Your distance plus resistance should not exceed 80 ft. in a straight line.

**NOTE**: Fog and mist will not harm your remote sensor but direct rain must be avoided.

## Battery Installation:

1. Remove the battery compartment cover;
2. Insert 2 x AA batteries in each sensor matching the polarity (+and-);
3. Replace the battery cover.

## MOUNTING THE REMOTE TEMPERATURE SENSOR

The outdoor remote sensor can be mounted in two ways:

• with the use of screws,
• using the adhesive tape.

# SPECIFICATIONS

- Temperature measuring range: -21.8°F to 157.2°F with 0.2°F resolution. (-29.9°C to 69.9°C resolution)
- Humidity measuring range : 1% RH -99% RH with 5% RH resolution.
- Checking interval : Every 1 minute
- Transmitting frequency: 433.92MHZ
- Transmission Range: 80 feet (in open space)
- Power Supply: 2 x AA,1.5V
- Battery life cycle: Approximately 12 months
- Recommended battery type: Alkaline

FCC Warning Statement

Changes or modifications not expressly approved by the party responsible for compliance could void the user's authority to operate the equipment. This equipment has been tested and found to comply with the limits for a Class B digital device, pursuant to Part 15 of the FCC Rules. These limits are designed to provide reasonable protection against harmful interference in a residential installation. This equipment generates uses and can radiate radio frequency energy and, if not installed and used in accordance with the instructions, may cause harmful interference to radio communications. However, there is no guarantee that interference will not occur in a particular installation. If this equipment does cause harmful interference to radio or television reception, which can be determined by turning the equipment off and on, the user is encouraged to try to correct the interference by one or more of the following measures:

- Reorient or relocate the receiving antenna.
- Increase the separation between the equipment and receiver.
- Connect the equipment into an outlet on a circuit different from that to which the receiver is connected.
- Consult the dealer or an experienced radio/TV technician for help.

This device complies with part 15 of the FCC Rules. Operation is subject to the following two conditions: (1) This device may not cause harmful interference, and (2) this device must accept any interference received, including interference that may cause undesired operation.

RF Exposure Statement

To maintain compliance with FCC's RF Exposure guidelines, This equipment should be installed and operated with minimum distance of 20Cm the radiator your body. This device and its antenna(s) must not be co-located or operation in conjunction with any other antenna or transmitter.