BENTSAI

PRTFOX

Product instructions

PRTFOX Default name:

PRTFOX-xxxxxxxxx

(product serial number)

PRTFOX default password:

12345678

Andriod

IOS

Scan the QR code to download the app
or search for PRTFOX in the app store

1 On/off function

Press and hold the power/print button on the side of the product for 3 seconds, the indicator light turns on and enters the startup state (the indicator light changes from white to green, and the printer is ready).

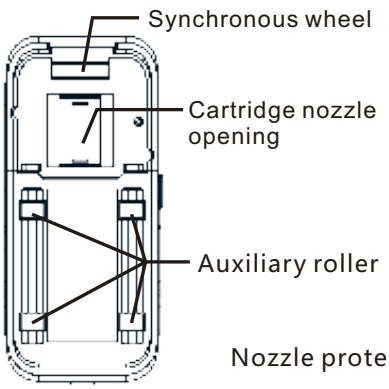

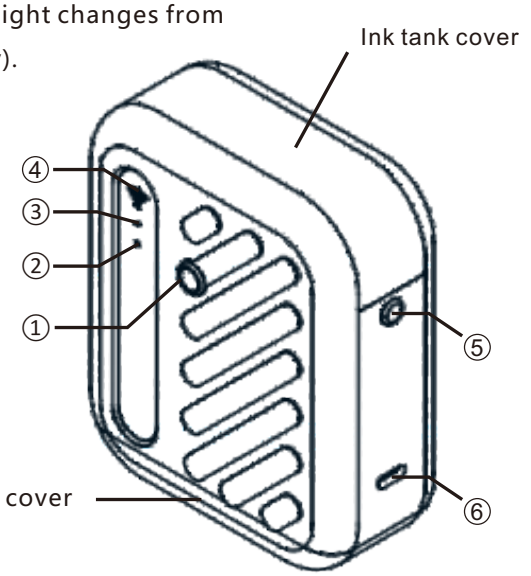

① Power/Print button

② Status Indicator

③ Reset hole(Forced shutdown by fine needle insertion)

④ IFI indicator

⑤ Ink cartridge cover open button

⑥ Charging port

2 Charging function

This product uses the type-c interface to charge, and the input voltage is 5V-1A. The indicator light is red when it isturned off and charged, and it goes out when it is full.

3 Install and remove ink cartridges

1.Press the ink cartridge cover open button to open the ink cartridge cover (the indicator light turns red).

2. Insert the ink cartridge into the ink cartridge compartment diagonally from above. (The direction of the ink cartridge nozzle is shown in the figure)

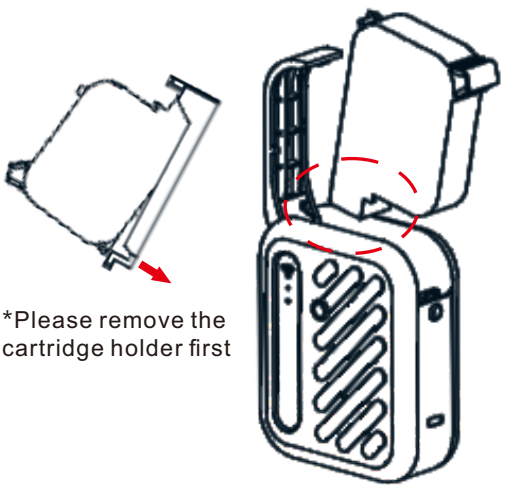

3. Align the ink cartridge with the inkjet opening and insert it until it completely enters the ink cartridge compartment.

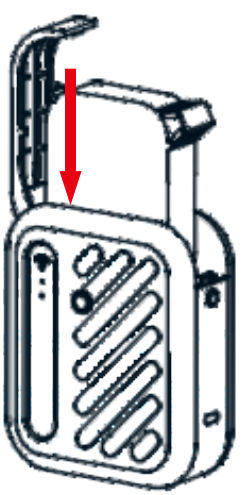

4. Close the ink cartridge cover, and the indicator light turns green again.

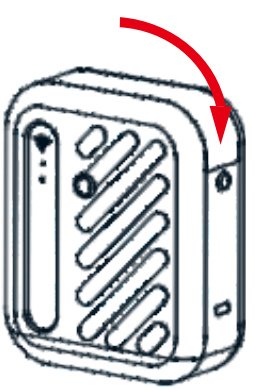

4 Printing steps

1. Turn on the mobile phone WIFI and select PRTFOX-XXXXX (product serial number), enter the password to connect to the product.
2. Scan the QR code (P1) in the manual to download the APP.
3. Open the APP, enter the content, and click the print button.
4. Open the nozzle protective cover at the bottom and press the side print (power on) button.
5. Place the printer nozzle on the printing surface and slide the printer at a constant speed.

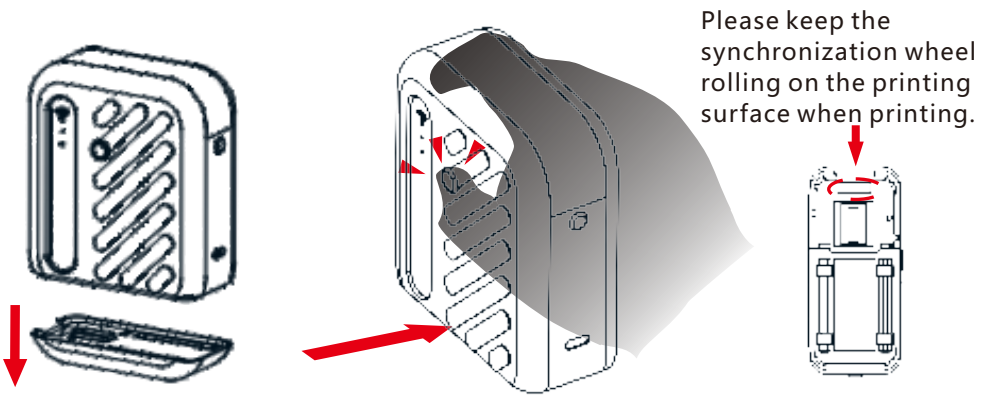

5 Printer maintenance

1. If the printer does not print within 10 minutes,cover the nozzle protective cover.

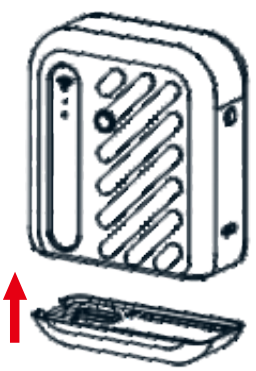

2. When not in use for more than 10 minutes, take out the ink cartridge from the printer and put the protective clip on it.

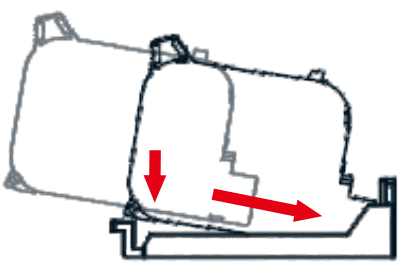

3. If fine white lines appear during printing, please wipe the nozzle with a paper towel or soft cloth sprayed with 95% alcohol.

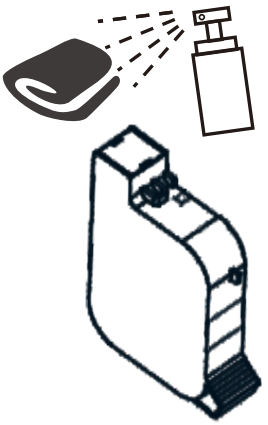

6 Precautions

Please keep the product and ink cartridges away from children.
Do not wipe the inside of the product when using a moist cloth to wipe the device.
When the ink gets into your eyes accidentally, please wash with plenty of water immediately. If you have any symptoms, please go to the hospital for help immediately.

7 Status indicator

	status	Three-color light status
Status Indicator	power on	white light on
	Ready	green light on
	Data receiving is complete, waiting for printing, printing	blue light on
	Printer error (the upper cover of the ink cartridge is opened)	red light on
	Warning (the print head cover is opened and the battery is low)	Red light flashes (0.5 seconds on and 0.5 seconds off)
	printer dormant	Green light flashes (1 second on and 3 seconds off)
	The firmware is being upgraded	yellow light on
	Firmware upgrade failed	red light on
	Charging instructions	red light on (Only when turned off and charging)
WIFI indicator	power on	white light on
	The phone is not connected or the router is not connected	blue light on
	The phone is connected or the router is connected	green light on
	dormant or firmware upgrade	No display
	Initialization or operation error	red light on

8 Packing list

NO.	Name	Quantity
1	PRTFOXprinter	1unit
2	ink cartridges	1pc
3	power line	1pc

9 The warranty provisions

Dear customers

Thank you for purchasing the products of Zhuhai Bentsai PrintingTechnology Co.,Ltd. In order to guarantee the use safety of the product and your legitimate interests , please read the following carefully.

This product is a precision grade instrument. In case of any abnormality and the device failure, please check it according to the instructions in the manual or contact our customer service center. Do not handle it by yourself.

Terms of service

1.This product implements the national three-guarantee regulations for products, and implements a one-year warranty period. The start date of the warranty period is subject to the product invoice date.
2.During the warranty period,if the product is innormal use and maintenance for failure caused by machine parts and materials andprocess, the company will provide free repair and replacement parts.
3.Except for wearing parts(ink cartridges , power line are not covered by the warranty).

Disclaimer

Any of the following conditions is not covered by the warranty:
1.Damage caused by improper transportation, use, storage and maintenance
2.It is not repaired by the maintenance department designated by the company,or assembled disassembled and repaired by user.
3.Parts or consumables used are not from the factory of the company and cause damage.
4.No warranty card and valid certificate or they are altered
5.Beyond warranty period.
6.Damage caused by force majeure.

Zhuhai Bentsai PrintingTechnology Co.,Ltd
www.bentsai.net
Customer service hotline: +86-756-8979060

FCC Warning Statement

Changes or modifications not expressly approved by the party responsible for compliance could void the user's authority to operate the equipment. This equipment has been tested and found to comply with the limits for a Class B digital device, pursuant to Part 15 of the FCC Rules. These limits are designed to provide reasonable protection against harmful interference in a residential installation. This equipment generates uses and can radiate radio frequency energy and, if not installed and used in accordance with the instructions, may cause harmful interference to radio communications. However, there is no guarantee that interference will not occur in a particular installation. If this equipment does cause harmful interference to radio or television reception, which can be determined by turning the equipment off and on, the user is encouraged to try to correct the interference by one or more of the following measures:

-- Reorient or relocate the receiving antenna.

-- Increase the separation between the equipment and receiver.

-- Connect the equipment into an outlet on a circuit different from that to which the receiver is connected.

-- Consult the dealer or an experienced radio/TV technician for help.

FCC Radiation Exposure Statement

The device has been evaluated to meet general RF exposure requirement. The device can be used in portable exposure condition without restriction.