LED PROJECTOR
User Guide

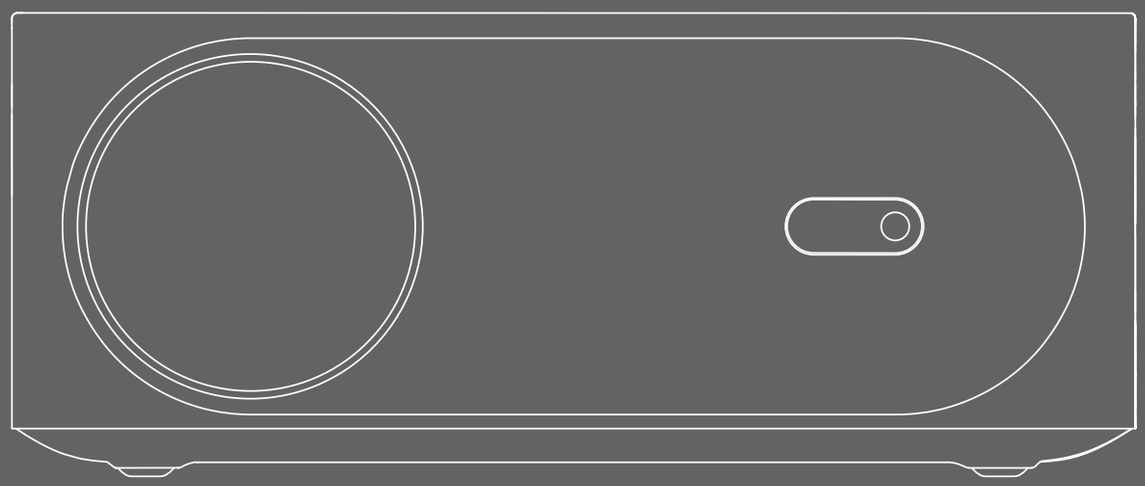

Due to continuous improvement, actual product may differ from the manual, manual is for reference only.

01 /Remote control introduction

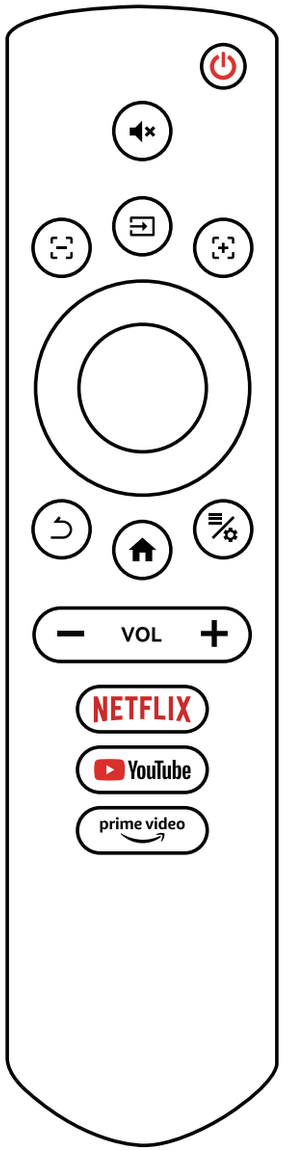

Power button:
Turn on/off

Mute button:
Mute

Focus button:
Adjust focal distance

Input button:
Choose to enter the Application Center, HDMI

Back button:
return to last step

Quick Menu Key:
Enter the setting pop-up window interface

Home button:
short press and return to the homepage

Direction Buttons:
Up Down
Left Right
OK

Volume button:
Volume-, Volume+

NETFLIX:
Direct enter NETFLIX

YouTube:
Direct enter YouTube

Prime video:
Direct enter PrimeVideo

● To avoid power shortage, please do not mix up the old and new batteries. To avoid battery leakage and corrosion, please take the battery out if do not use remote control for a long time.

02/Host Appearance and Function Description

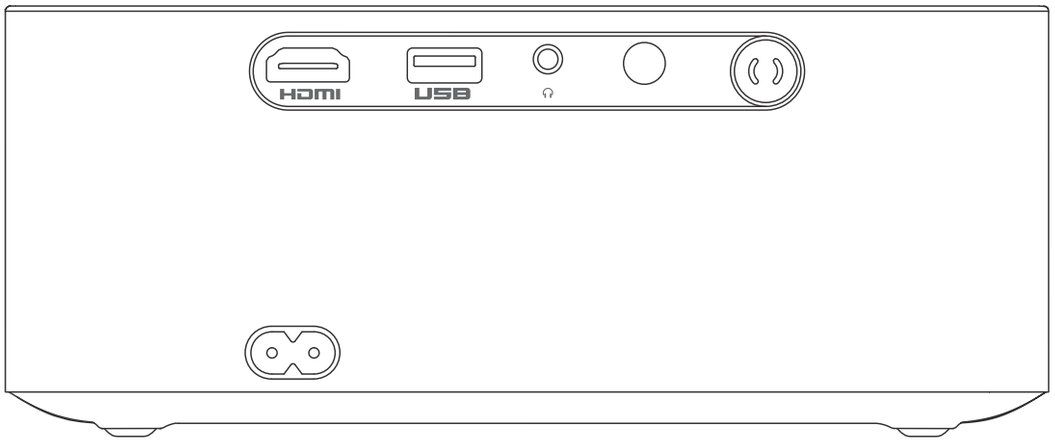

HDMI

USB

Headphone

Power switch

Power input

HDMI® The terms HDMI and HDMI High-Definition Multimedia Interface, and the HDMI Logo are trademarks or registered trademarks of HDMI Licensing Administrator, Inc. in the United States and other countries.

03/Interface connect

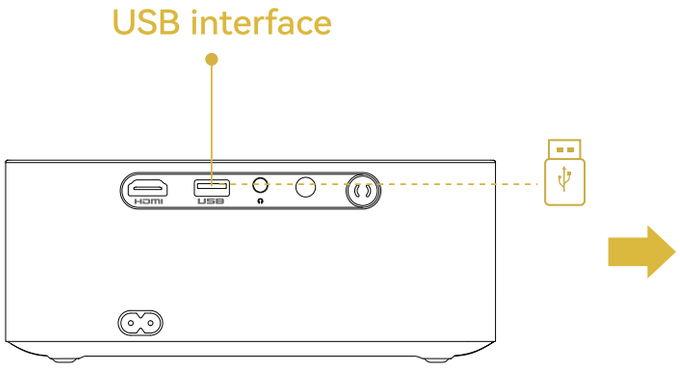

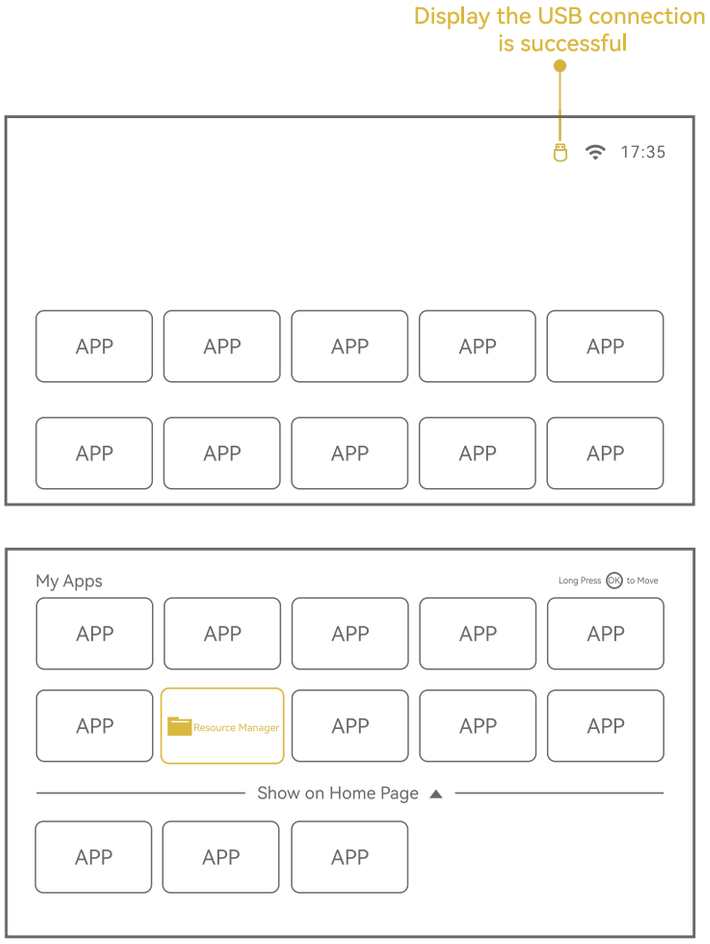

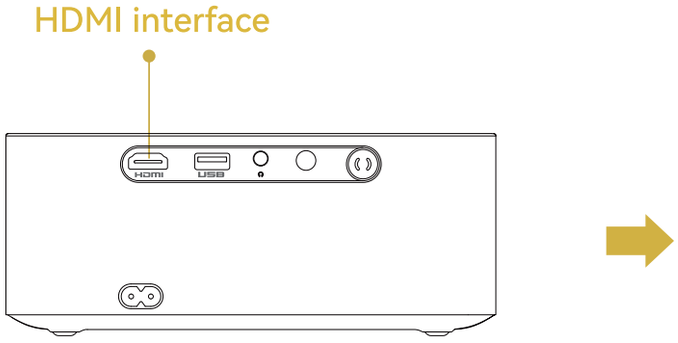

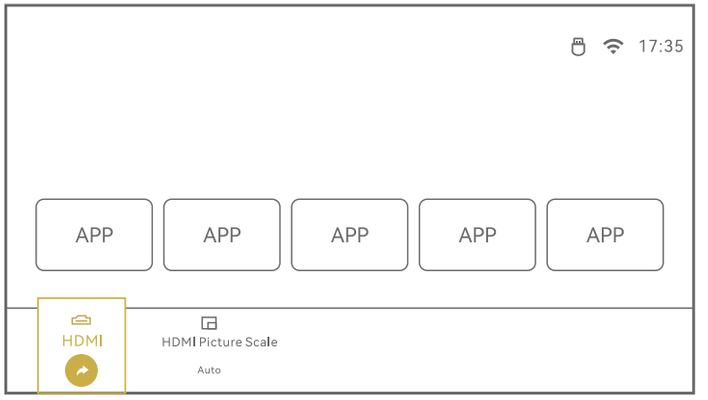

04/Setting

• On the homepage, select Settings

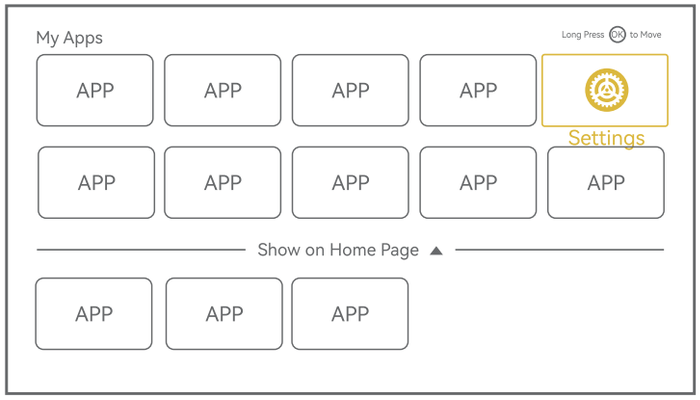

• WIFI Setting

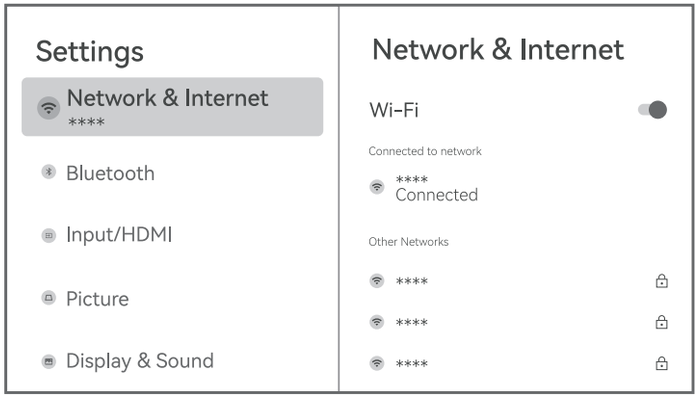

• Bluetooth Setting

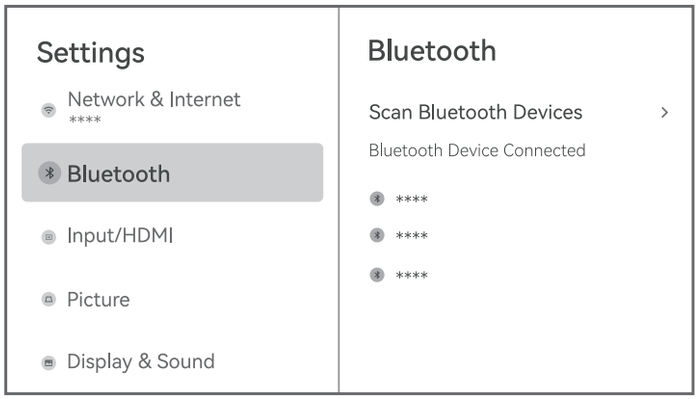

• Input/HDMI Setting

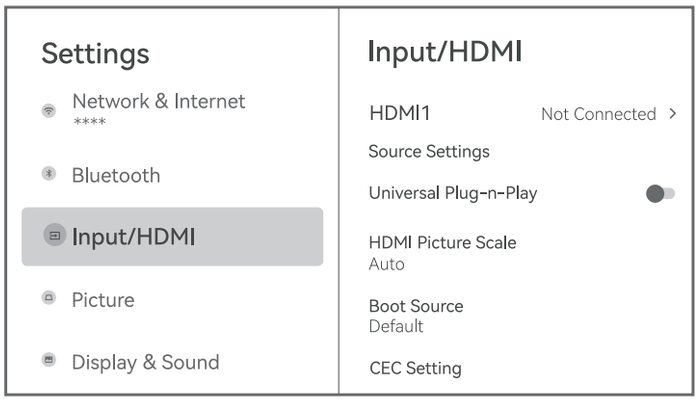

05 /APP

First step

On the homepage, select
My APPS--Netrange

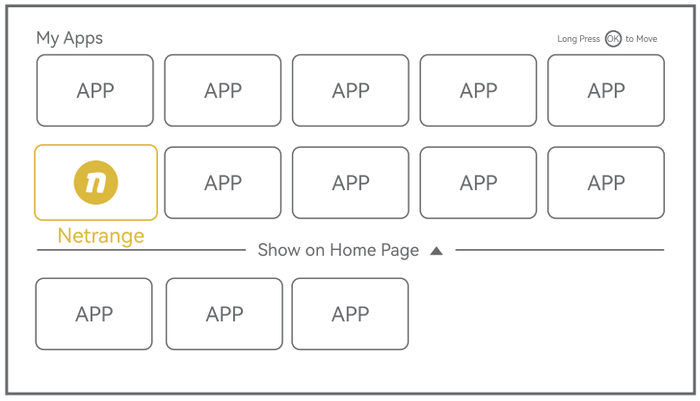

Second step

You can search for what you need

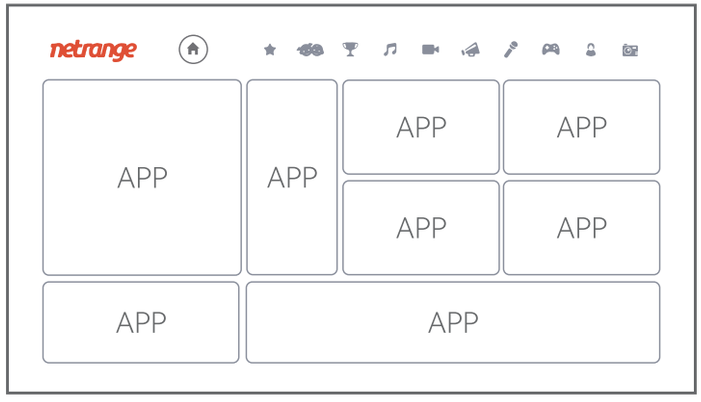

06/Miracast and DLNA/MagicCast

• Miracast

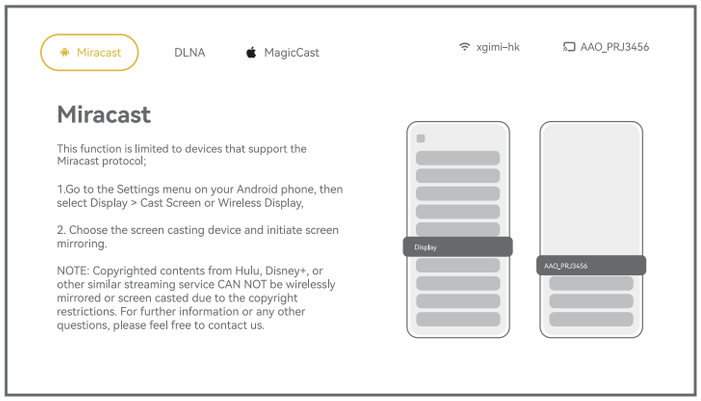

• On the homepage, ScreenCast Assistant

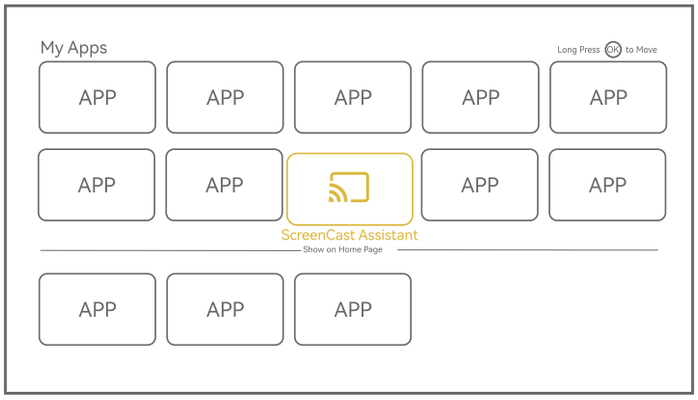

• DLNA

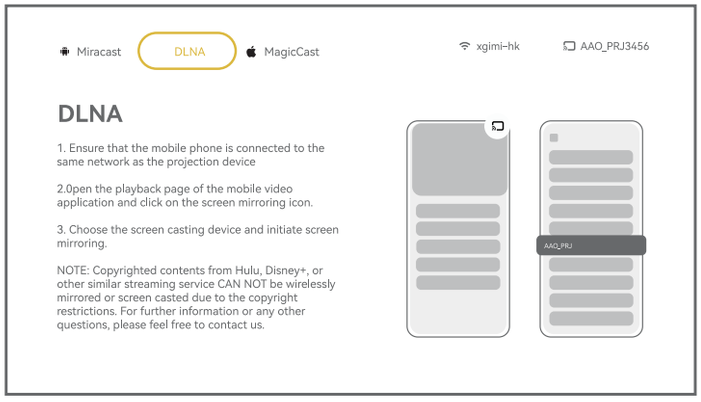

• MagicCast

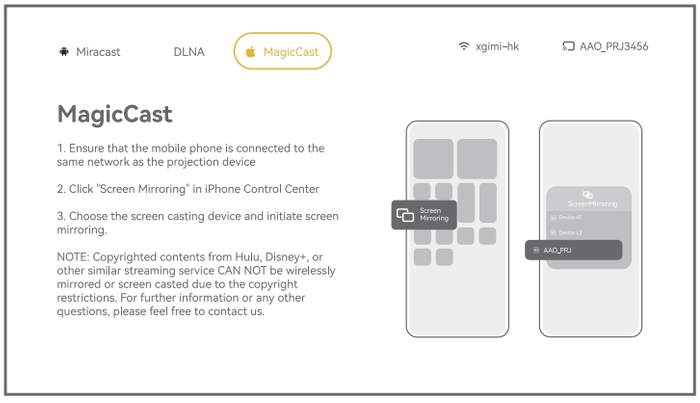

07/Speaker mode setting

First step

On the homepage, select
My APPS--Bluetooth Speaker

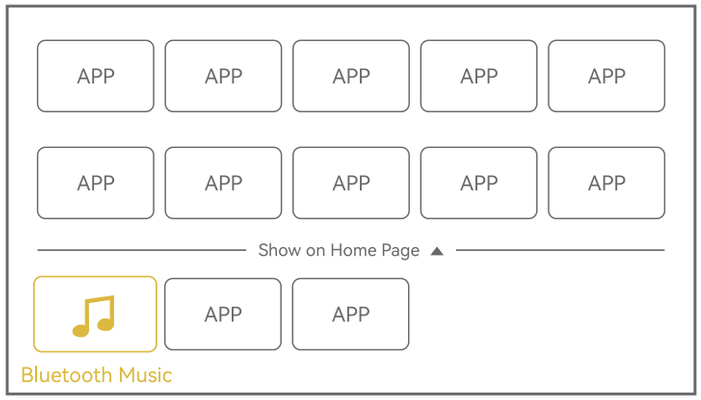

Second step

Connect to the Bluetooth for
playing music

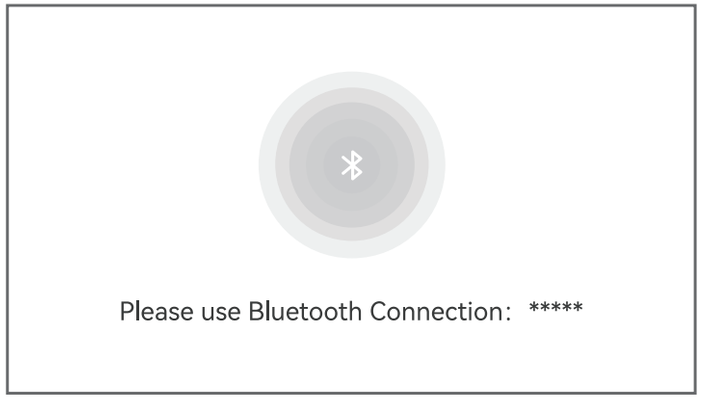

Third step

playing music

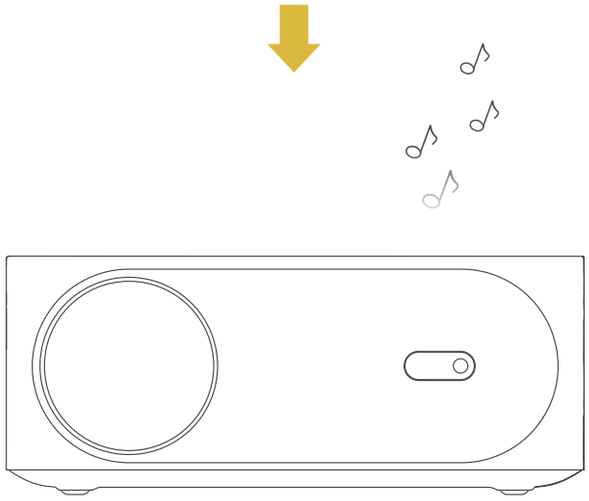

08/E-manual

First step

On the homepage, select
My APPS--E-manual

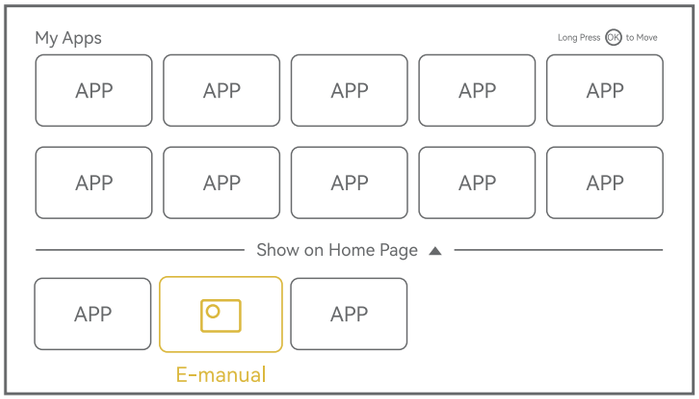

Second step

For more information, please refer
to the E-manual field inquiry.

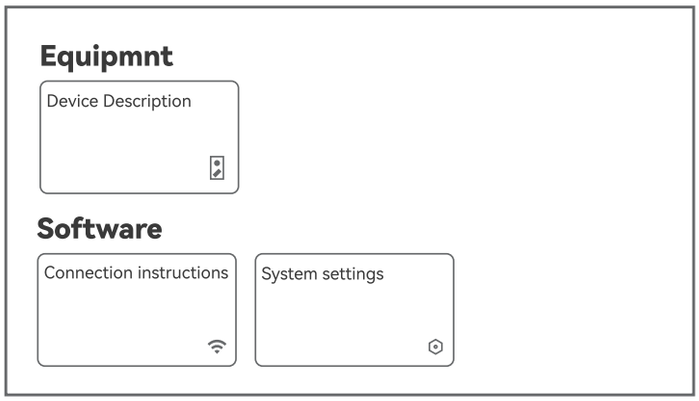

09/Electronic focusing

Electronic focusing

Press the " " and " " buttons
on remote control to adjust
the clarity

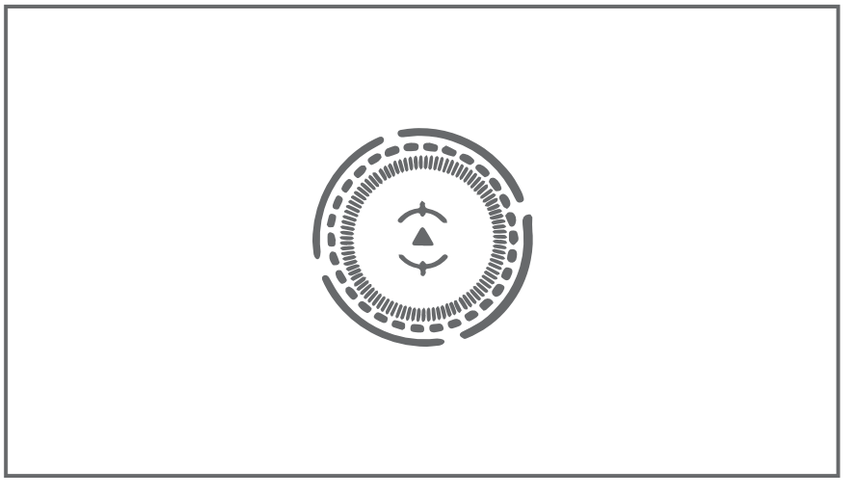

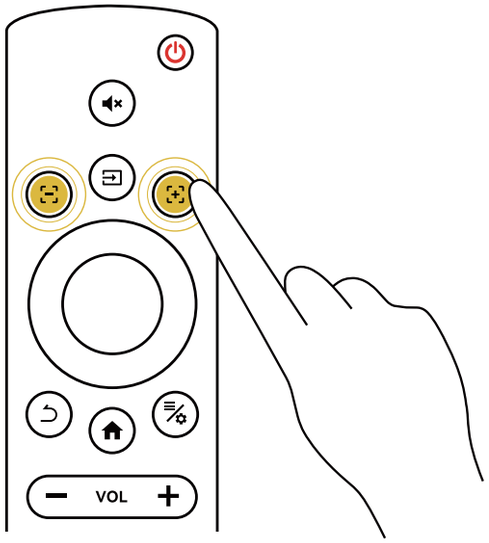

10/Projection distance & size

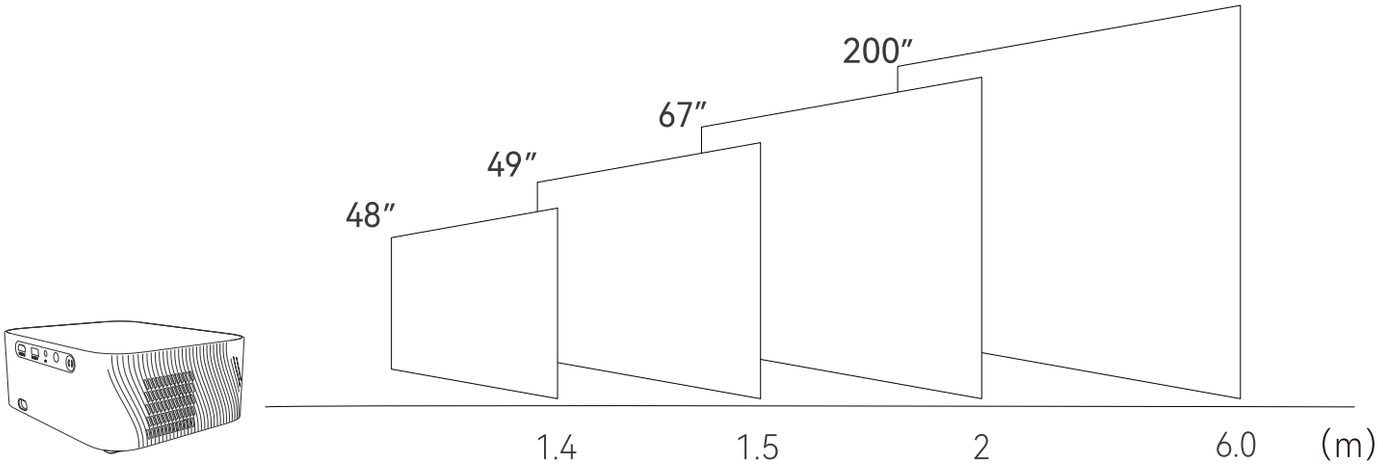

11/Technology Features

Imaging technology	TFT LCD
Native resolution	1920*1080
Light source	LED
Focus mode	Manual Focusing
Projection distance	1.47-6.0M
Screen size	48-200 inches
Aspect ratio	16: 9 and 4: 3 and Auto-fit

Power input	100V-240V-50/60HZ
Input	USB*1/HDMI*1
Output	Earphone
Speaker	4Ω3W
Unit size	200*167*80mm
Net Weight	1.11KG
Throw Ratio	1.35:1

12/Unload the Dust Net and Clear

First step

Take out dust net from the projector bottom

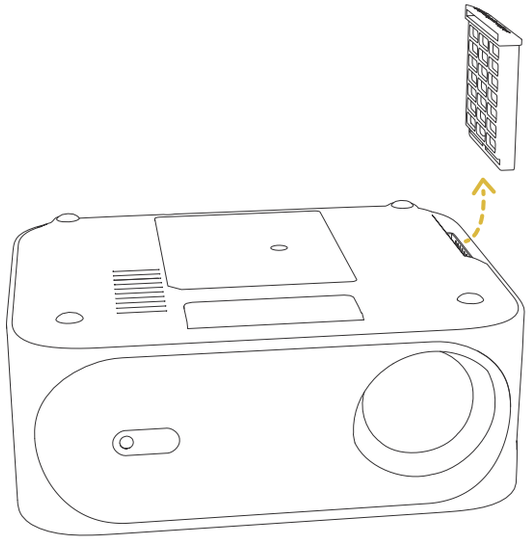

Second step

Clean the dust net

For your safety,please cut off the power before cleaning

Third step

Align the bottom bayonet and install the dust net

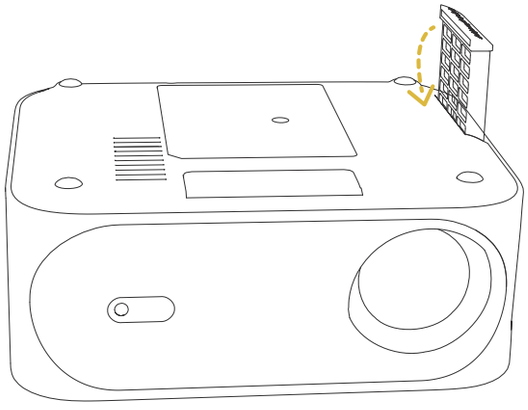

13 /Projector Installation

- **Desktop use**

① attachment bracket

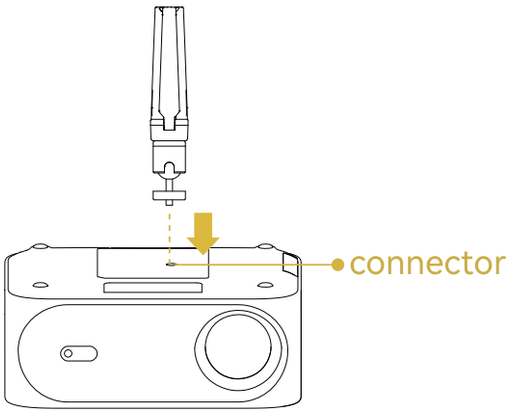

② Rotate the bracket until it is fixed.

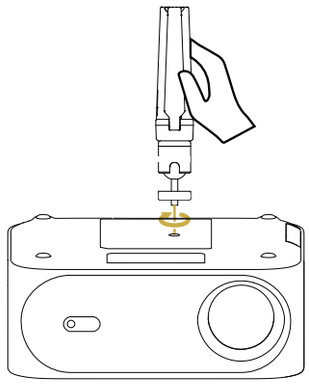

③ Installation completed

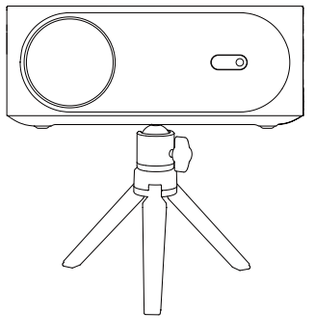

- **Hoisting and use**

① attachment bracket

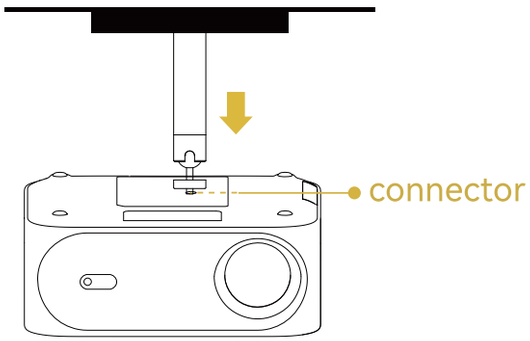

② Rotate the machine to a fixed position.

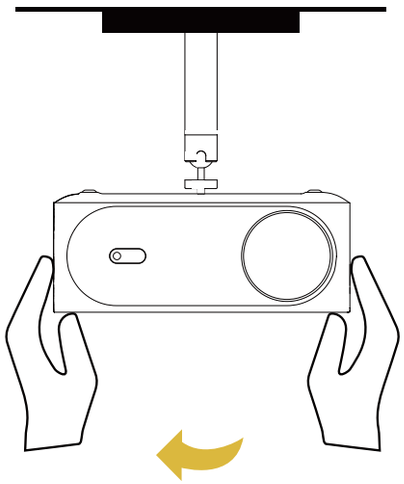

③ Installation completed

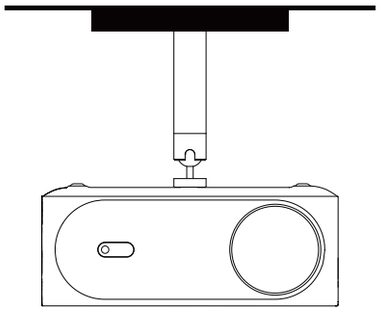

● Fixed Hanger Screw Hole Type:1/4 inch threaded hole

Note: The above brackets are not included with the machine, and are for illustration only.

Please read the notes carefully:

- To ensure stable power supply, please use national standard power cable and power cord with grounding;
- Please use the type of power supply indicated on the projector and the supplied power supply for power supply;
- Please do not disassemble the machine yourself, otherwise the company will not undertake warranty service;
- Do not look directly at the projector lens while the machine is working, it might cause damage to your eyes;
- To prevent clogging the projector vents, do not cover them with cloth, carpet or other materials;
- This projector does not have waterproof function, please keep it away from rain, moisture and other items containing liquid such as vase, cup, etc;
- To prevent electric shock, please keep the projector away from rain, water or moisture;
- Cut off the power supply if do not use this projector for a long time;
- Use the original foam or other anti-shock material to protect projector if you need transport this projector;
- If you find the projector has problems, please contact with the supplier, do not repair by yourself;
- To extend the projector life span and protect your eyesight, we suggest you may have a break after 3-4 hours using.

Maintain Indication:

1-year warranty from factory, for more warranty information, please contact with supplier. (Warranty service does not include housing, instruction manual, packaging and user's personalsubjective objections to image, sound quality, timbre, etc.)

FCC Warning:

This equipment has been tested and found to comply with the limits for a Class B digital device, pursuant to part 15 of the FCC Rules. These limits are designed to provide reasonable protection against harmful interference in a residential installation. This equipment generates, uses and can radiate radio frequency energy and, if not installed and used in accordance with the instructions, may cause harmful interference to radio communications. However, there is no guarantee that interference will not occur in a particular installation. If this equipment does cause harmful interference to radio or television reception, which can be determined by turning the equipment off and on, the user is encouraged to try to correct the interference by one or more of the following measures:

- Reorient or relocate the receiving antenna.
- Increase the separation between the equipment and receiver.
- Connect the equipment into an outlet on a circuit different from that to which the receiver is connected.
- Consult the dealer or an experienced radio/TV technician for help.

Caution: Any changes or modifications to this device not explicitly approved by manufacturer could void your authority to operate this equipment.

This device complies with part 15 of the FCC Rules. Operation is subject to the following two conditions: (1) This device may not cause harmful interference, and (2) this device must accept any interference received, including interference that may cause undesired operation.

The device has been evaluated to meet general RF exposure requirement. This equipment complies with FCC radiation exposure limits set forth for an uncontrolled environment.
This equipment should be installed and operated with minimum distance 20cm between the radiator & your body.