Analog

UHF/VHF Two Way Radio

Operating Manual

Draft version

PREFACE

Thank you for purchasing UV-5R Pro Two Way Radio, which is a dual band/dual display radio/dual watch. This easy-to-use radio will deliver you secure, instant and reliable communications at peak efficiency. Please read this manual carefully before use. The information presented herein will help you to derive maximum performance from your radio.
This manual is applicable to the following product: UV-5R Pro, UV-5RX, UV-5RS, UV-5RA,UV-5R Plus,G5R and TR-818 Two Way Radios.

ATTENTION!

» To help you ward off bodily injury or property loss that may arise from improper operation, please read all the information carefully before using our products. This contains instructions for safe usage and RF energy awareness and control for compliance with applicable standards and regulation.
» When programming the radio, start by reading the factory software data, and then rewrite this data with your frequency etc., to a new saved code plug, otherwise errors may occur.
» You can use the programming cable with a PC to program the frequency, channel type, power etc. your programming must comply with your FCC (or other country) license certification.

FCC Licensing Information

This radio operates on Commercial/Land Mobile frequencies which require a license from the Federal Communications Commission (FCC) for business, personal, education and recreational use. To obtain forms, call the FCC forms hotline at: 1-800-418-3676 or go to http://www.fcc.gov For questions concerning commercial licensing, contact the FCC at 1-888- CALL-FCC (1-888-225-5322).

Table of Contents

1. GETTING STARTED

1.1 Regulations and Safety Warnings
1.2 Main features
1.3 Content of the packaging

2. BATTERY INFORMATION

2.1 Charging the Battery Pack
2.2 Charger Supplied
2.3 Use Caution with the Li-ion Battery
2.4 How to Charge
2.5 LED Indicator
2.6 How to Store the Battery

3. INSTALLATION OF ACCESSORIES

3.1 Installing / Removing the Antenna
3.2 Installing the belt clip
3.3 Installing the battery pack
3.4 Additional Speaker/Microphone (Optional)

4. RADIO OVERVIEW

4.1 Buttons and controls of the radio
4.2 Main controls and parts of the radio
4.3 Status Indications
4.4 Main keypad controls

5. BASIC OPERATIONS

5.1 Power on the radio
5.2 Adjusting the volume
5.3 Making a call
5.4 Channel selection

5.5 Frequency (VFO) mode
5.6 Channel (MR) mode
6. ADVANCED FEATURES
6.1 Frequency scanning
6.2 Channel scanning
6.3 Search CTCSS/DCS Code
6.4 Cursor▼▲Conversion (A/B)
6.5 High/low power fast selection
6.6 Keypad lock
6.7 FM Radio (FM)
6.8 Flashlight
6.9 1000Hz, 1450Hz, 1750Hz Tone-burst
6.10 Manual Programming (Channels Memory)
6.11 Repeaters Programming
7. WORKING THE MENU SYSTEM
7.1 Basic use
7.2 Using short-cuts
7.3 Functions and operations
8. ON-LINE SERVICE AND SUPPORT
Appendix A. - Trouble shooting guide
Appendix B. - Technical Specifications
Appendix C. - Shortcut Menu operations

1. GETTING STARTED

1.1 Regulations and Safety Warnings

This device complies with Part 15 of the FCC Rules. Operation is subject to the following two conditions:
(1) This device may not cause harmful interference.
(2) This device must accept any interference received, including interference that may cause undesired operation.
Important: Any changes or modifications not expressly approved by the party responsible for compliance could void the user's authority to operate this device. Your radio is set up to transmit a regulated signal on an assigned frequency. It is against the law to alter or adjust the settings inside the radio to exceed those limitations. Any adjustments to your radio must be made by qualified technicians.
To be safe and sure:
• Never open your radio’s case.
• Never change or replace anything in your radio except the battery.
Your radio might cause TV or radio interference even when it is operating properly. To determine whether your radio is causing the interference, turn it off. If the interference goes away, your radio is causing it. Try to eliminate the interference by moving your radio away from the receiver. If you cannot eliminate the interference, the FCC requires that you stop using the radio.
Hazardous Environments: Do not operate the radio in hazardous environments. Explosion or fire may result.
Do not operate the radio near unshielded electrical blasting caps.
Under certain conditions, radios can interfere with blasting operations and may cause an explosion. Turn your radio OFF to prevent accidental transmission when in a blasting area or in areas posted: "Turn off two-way radio." Construction crews often use remote control RF devices to set off explosives.
Care and Safety: To clean the radio, use a soft cloth dampened with water. Do not use cleaners or solvents because they can harm the body of the unit and leak inside, causing permanent damage. Use a dry, lint-free cloth to clean the battery contacts.

RF Exposure Information

WARNING! Read this information before using the radio. In August 1996 the Federal Communications Commission (FCC) of the United States with its action in Report and Order FCC 96-326 adopted an updated safety standard for human exposure to radio frequency electromagnetic energy emitted by FCC regulated transmitters.
Those guidelines are consistent with the safety standard previously set by both U.S. and international standards bodies. The design of the radio complies with the FCC guidelines and these international standards.
Never allow children to operate the radio without adult supervision and the knowledge of the following guidelines.

This device complies with Part 15 of the FCC Rules. Operation is subject to the condition that this device does not cause harmful interference.
For a transmitter that can only be operated with an FCC license,warningss concerning compliance with applicable licensing requirements and information concerning license applianction procedures.

Our radio generators RF electromagnetic energy during transmit mode.
This radio is designed for and classified as“Occupational Use Only”,meaning it must be used only during the course of employment by individuals aware of the hazards,and the ways To Minimize Such hazards.
This radio is NOT intended for use by the“General Population” in an uncontrolled environment. This radio has been tested and complies with the FCC RF exposure limits for“Occupational Use Only”. Inaddition, our radio complies with the following Standards and Guidelines with regard to RF energy and electromagnetic energy levels and evaluation of such levels for exposure to humans:
---IEEE Std. 1528:2013 and KDB447498, Evaluating Compliance with FCC Guidelines for Human Exposure to Radio Frequency Electromagnetic Fields.
---American National Standards Institute (C95.1-1992), IEEE Standard for Safety Levels with Respect to Human Exposure to Radio Frequency Electromagnetic Fields, 3 kHz to 300 GHz.
---American National Standards Institute (C95.3-1992), IEEE Recommended Practice for the Measurement of Potentially

Hazardous Electromagnetic Fields-RF and Microwave.
The information listed above provides the user with the information needed to make him or her aware of RF exposure, and what to do to as-sure that this radio operates with the FCC RF exposure limits of this radio.

Electromagnetic Interference/Compatibility

During transmissions, Our radio generates RF energy that can possibly cause interference with other devices or systems. To avoid such interference, turn off the radio in areas where signs are posted to do so. DO NOT operate the transmitter in areas that are sensitive to electromagnetic radiation such as hospitals, aircraft, and blasting sites.

Occupational/Controlled Use

The radio transmitter is used in situations in which persons are exposed as consequence of their employment provided those persons are fully aware of the potential for exposure and can exercise control over their exposure.

Attention:

This radio complieswith IEEE and ICNIRP exposure limits for occupational/controlled RF exposure emvironment at operating duty factors of up to 50% and is authorized by the FCC for occupational use only. An appropriate warning lable is affixed to all units. In order to comply with RF exposure requirements, a minimum distance of 2.5cm must be maintained when held-to-face, and body-worn operations are restricted to the approved original acessories (belt clip)a inimum distance f 0 m. Do not use this device when antenna shows obvious damages.
This product is compliance to FCC RF Exposure requirements and refers to FCC website https://apps.fcc.gov/oetcf/eas/reports/GenericSearch.cfm search for FCC ID: 2AZGL-UV5RA to gain further information include SAR Values.
Changes or modifications not expressly approved by the party responsible for compliance could void the user's authority to operate the equipment.

WARNING! It is up to the user to properly operate this radio transmitter to insure safe operation. Please adhere to the following:
Use only the supplied or an approved antenna(max gain 1.5dBi). Unauthorized antennas, modifications, or attachments

could impair call quality, damage the radio, or result in violation of FCC regulations.
Do not use the radio with a damaged antenna.
If a damaged antenna comes into contact with the skin, a minor burn may result. Please contact your local dealer for a replacement antenna.

Hand-held Operation (Held-to-Face)

This device was evaluated for typical hand-held (held-to- face) operations with a 2 inch spacing from the front of the radio. For hand-held operation, the radio should be held 2 inch from the user's face in order to comply with FCC RF exposure requirements.
For more information about RF exposure, please visit the FCC web site at www.fcc.gov.

Body-worn Operation

This device was evaluated for body-worn operations with the supplied belt-clip accessory. (All necessary accessories are included in the package; any additional or optional accessories are not required for compliance with the guidelines.) Third party accessories (unless approved by the manufacturer) should be avoided as these might not comply with FCC RF exposure guidelines.
For more information about RF exposure, please visit the FCC web site at www.fcc.gov.

■Precautions for Portable Terminals

Operating Prohibitions

To protect you against any property loss, bodily injury or even death, be sure to observe the following safety instructions:

1. Do not operate the product in a location containing fuels, chemicals, explosive atmospheres and other flammable or explosive materials. In such location, only an approved Ex-protection model is allowed for use, but any attempt to assemble or disassemble it is strictly prohibited.
2. Do not operate the product near or in any blasting area.
3. Do not operate the product near any medical or electronic equipment that is vulnerable to RF signals.
4. Do not hold the product while driving.
5. Do not operate the product in any area where use of wireless communication equipment is completely prohibited.

Important Tips

To help you make better use of the product, be sure to observe the following instructions:

1. Do not use any unauthorized or damaged accessory.
2. Keep the product at least 2.5 centimeters away from your body during transmission.
3. Do not keep the product receiving at high volume for a long time.
4. For vehicles with an air bag, do not place the product in the area over the air bag or in the air bag deployment area.
5. Keep the product and its accessories out of reach of children and pets.
6. Please operate the product within the specified temperature range.
7. Continuous transmission for a long time may lead to heat accumulation within the product. In this case, please keep it at a proper location for cooling.
8. Handle the product with care.
9. Do not disassemble, modify or repair the product and its accessories without authorization.

■Precautions for Batteries

Charging Prohibitions

To protect you against any property loss, bodily injury or even death, be sure to observe the following safety instructions:

1. Do not charge or replace your battery in a location containing fuels, chemicals, explosive atmospheres and other flammable or explosive materials.
2. Do not charge your battery that is wet. Please dry it with a soft and clean cloth prior to charge.
3. Do not charge your battery suffering deformation, leakage and overheat.
4. Do not charge your battery with an unauthorized charger.
5. Do not charge your battery in a location where strong radiation is present.
6. Overcharge shall always be prohibited for it may shorten the life of your battery.

Maintenance Instructions

To help your battery work normally or prolong its life, be sure to observe the following instructions:

1. Accumulated dust on charging connector may affect normal charging. Please use a clean and dry cloth to wipe it on a regular basis.
2. It is recommended to charge the battery under 5℃~40℃. Violation of the said limit may cause battery life reduction or even battery leakage.
3. To charge a battery attached to the product, turn it off to ensure a full charge.
4. Do not remove the battery or unplug the power cord during charging to ensure a smooth charging process.
5. Do not dispose of the battery in fire.
6. Do not expose the battery to direct sunlight for a long time nor place it close to other heating sources.
7. Do not squeeze and penetrate the battery, nor remove its housing.

Transportation Instructions

1. Damaged batteries must not be transported.
2. To avoid short circuit, separate the battery from metal pars or from each other if two or more batteries are transported in one packaging.
3. The radio must be switched off and secured against switch-on, if the battery is attached.

The content of the shipment must be declared in the shipping documents and by a Battery Shipping Label on the packaging.

Contact your hauler for the local regulations and further information.

1.2 Main features

- Frequency band: 150-174 & 400-480MHz
- Up to 128 memory channels
- 50 CTCSS tones and 210 DCS codes
- SOS Emergency function
- FM radio receiver (88-108MHz)
- Channel or frequency mode selection
- TOT (Time out timer)
- Reverse function
- CTCSS and DCS codes research
- Busy Channel Lockout function (BCL)
- Frequency step: 2.5/5/6.25/10/12.5/25KHz
- Repeater shift
- VOICE: vocal indication of the function selected
- VHF and UHF bands and channel name displayed
- Squelch adjustable in 9 levels
- 1750Hz tone for repeaters
- LCD display with backlight adjustable in 3 colors
- VOX, Scan, Dual Watch functions
- Power Save
- DTMF function
- Alarm function
- Setting and storing of channel names
- Li-Ion 1800mAh battery pack
- Frequency offset (adjustable): 0-69.990MHz
- 2pin Kenwood accessory jack
- Keypad lock
- Comply with FCC two way radio related standards, FCC ID: 2AZGL-UV5RA

1.3 Content of the packaging

- 1 UV-5R Pro transceiver
- 1 Fast desktop charger
- 1 Antenna
- 1 Li-Ion battery pack 1800mAh 7.4V
- 1 Wall adaptor
- 1 Belt clip

If any item is missing, please verify with your dealer.

2. BATTERY INFORMATION

2.1 Charging the Battery Pack

The Li-ion battery pack is not charged at the factory; please charge it before use. Charging the battery pack for the first time after purchase or extended storage (more than 2 months) may not bring the battery pack to its normal maximum operating capacity. Best operation will require fully charging/ discharging the battery two or three times before the operating capacity will reach its best performance. The battery pack life may be depleted when it's operating time decreases even though it has been fully and correctly charged. If this is the case, replace the battery pack.

2.2 Charger Supplied

Please use the specified charger provided Other models may cause explosion and personal injury. After installing the battery pack, and if the radio displays low battery with a voice prompt, please charge the battery.

2.3 Use Caution with the Li-ion Battery

a. Do not short the battery terminals or throw the battery into a fire. Never attempt to remove the casing from the battery pack, as cannot be held responsible for any accident caused by modifying the battery.

b. The ambient temperature should be between 5℃-40℃ (40˚F - 105˚F) while charging the battery. Charging outside this

range may not fully charge the battery.

c. Please turn off the radio before inserting it into the charger. It may otherwise interfere with correct charging.

d. To avoid interfering with the charging cycle, please do not cut off the power or remove the battery during charging until the green light is on.

e. Do not recharge the battery pack if it is fully charged. This may shorten the life of the battery pack or damage the battery pack.

f. Do not charge the battery or the radio if it is damp. Dry it before charging to avoid damage.

WARNING！

When keys, ornamental chain or other electric metals contact the battery terminal, the battery may become damage or injure a human. If the battery terminals are short circuited it will generate a lot of heat. Take care when carrying and using the battery. Remember to put the battery or radio into an insulated container. Do not put it into a metal container.

2.4 How to Charge

a. Plug the AC adaptor into the AC outlet, and then plug the cable of the AC adaptor into the DC jack located on the back of the charger. The indicator light blinks orange and is then ready to charge a battery.

b. Plug the battery or the radio into the charger. Make sure the battery terminals are good in contact with charging terminals. The indicator light turns to red--- charging begins.

c. It takes approximately 2-5 hours to fully charge the battery. When the lamp lights green, the charging is completed. Remove the battery or the radio unit with its battery from socket.

When charging a radio (with battery) the indicating lamp will not turn into green to show the fully charged status if the radio is powered on. Only when the radio is switched off will the lamp indicate normal operation. The radio consumes energy when it is power-on, and the charger cannot detect the correct battery voltage when the battery has been fully charged. So the charger will charge the battery in constant voltage mode and fail to indicate correctly when the battery has been fully charged.

2.5 LED Indicator

STATUS	LED
No Battery	Green and red alternately flashing
Charge Normally	Red
Fully Charged	Green
Trouble	Red blinks fast for a long time

NOTE：Trouble means battery too warm, battery short-circuited or charger short-circuited.

2.6 How to Store the Battery

a. If the battery needs to be stored, keep it in status of 80% discharged.
b. It should be kept in low temperature and dry environment.
c. Keep it away from hot places and direct sunlight.
» Do not short circuit the battery terminals.
» Never attempt to remove the casing from the battery pack.
» Never store the battery in unsafe surroundings, as a short may cause an explosion.
» Do not put the battery in a hot environment or throw it into a fire, as it may cause an explosion.

3. INSTALLATION OF ACCESSORIES

Before the radio is ready for use we need to attach the antenna and battery pack, as well as charge the battery.

3.1 Installing/ Removing the Antenna

a. Installing the Antenna: Screw the antenna into the connector on the top of the transceiver by holding the antenna at its base and turning it clockwise until secure.

b. Removing the Antenna: Turn the antenna counter-clockwise to remove it.

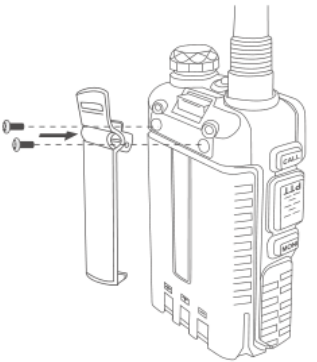

3.2 Installing the belt clip

a. At the back of the radio there are two parallel screws mounted above the battery, remove these and thread them through the holes on the belt clip as you screw them back into the radio body.

b. Removing the Belt Clip: Unscrew counter-clockwise to remove the belt clip.

3.3 Installing the battery pack

Before attaching or removing the battery make sure your radio is turned off by turning the power/volume knob all the way counter-clockwise.

a. Make sure the battery is aligned in parallel with the radio body with the lower edge of the battery about 1-2cm below the edge of the radio.
b. Once aligned with the guide-rails, slide the battery upward until you hear a click as the battery locks in place.

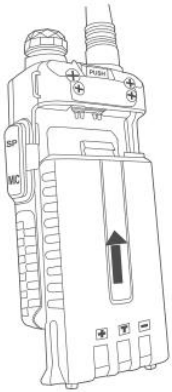

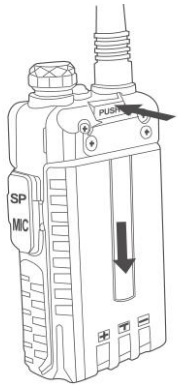

Remove the battery pack

To remove the battery, press the battery release above the battery pack, as you slide the battery downward.

3.4 Installing the Additional Speaker/Microphone (Optional)

Pry open the rubber MIC-Headset jack cover and then insert the Speaker / Microphone plug into the double jack.

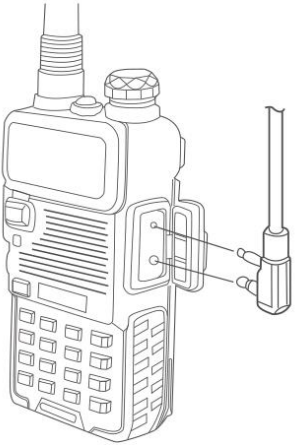

4. RADIO OVERVIEW

4.1 Buttons and controls of the radio

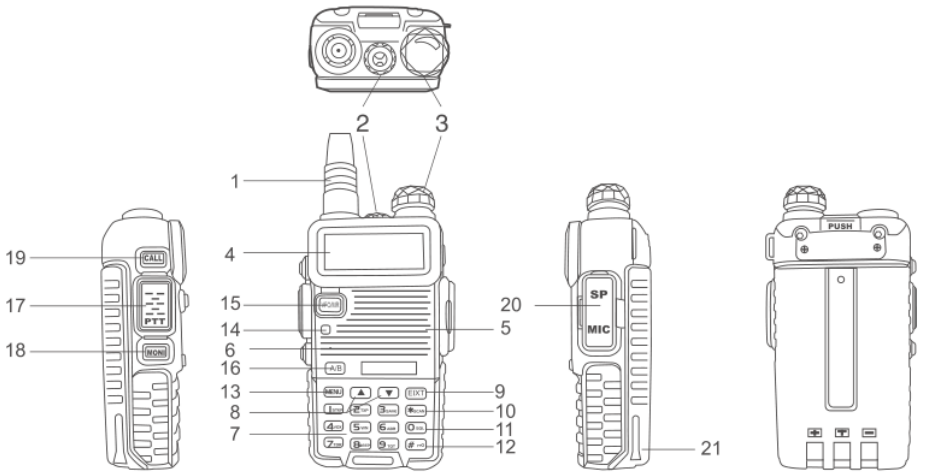

1. Antenna
2. Flashlight
3. Power / Switch / Volume control: Rotate to switch on/off the radio and adjust the volume
4. LCD display
5. Speaker
6. Microphone
7. Alphanumerical keypad
8. ▲/▼ keys: to select the functions/menu
9. EXIT: Push it to exit the menu and functions
10. *SCAN: Reverse frequency/SCAN. Press to activate the Reverse frequency; keep it pressed to activate the SCAN function
11. 0 / SQL: quick selection of the squelch setting
12. #TTO : Keypad lock. Long pressure: the keypad will be locked.
13. MENU: enter the MENU functions and confirms the selection.
14. Led: transmission (red) ; reception (green).
15. VFO/MR: to change the frequency or the channel mode
16. A/B. This control is useful to select the desired frequency, VHF or UHF.
17. PTT
18. MON. Long press: to activate the Monitor function. Short press: turns the flashlight on. Press it again to issue an emergency light.
19. CALL: press it activate the FM radio. If you keep it pressed for 5 seconds you will hear an alarm note and the radio will switch to alarm mode.
20. MIC/SP: External speaker/mike jacks.
21. 1800mAh Li-Ion battery pack

4.2 Main controls and parts of the radio

LCD Display

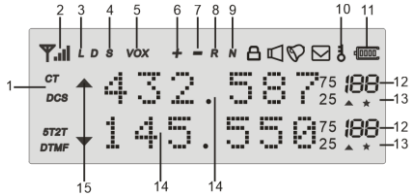

1. These symbols show that you set a **DCS** or **CTCSS** code in tx or rx. In tx mode it appears while you are transmitting, while in rx mode it is shown also in stand-by condition.

2. Received signal strength.

4. This letter is displayed when the **Dual Watch** function is active.

5. VOX function enabled.

6. Appears when a **positive shift** is activated.

7. Appears when a **negative shift** is enabled.

8. Reverse frequency

9. Narrow bandwidth: N = narrow. When the wide (W) bandwidth is activated, no icon is displayed.

10. This icon indicates the **keypad lock**. To unlock it press **[#]** .

11. **Battery level indicator.** When the battery is almost used up, the icon starts blinking and the transmission is blocked. Charge the radio.

12. Indicates the **channel number** that you stored

13. When the radio is in **reception mode**, this icon is displayed

14. Depending on the setting, it will show the frequency in use, the channel name, the menu setting, etc

15. Indicates the **VFO** in use and the current menu or function setting. This icon is displayed close to the band in use or to the menu settings.

Battery Level Indicator

When the battery level indicator reads the battery is depleted. At this point the radio will start beeping periodically as well as flash the backlight of the display and when voice prompts are enabled, a "Low Voltage" announcement will be heard, indicating that you need to change your battery or put your radio in the charger.

4.3 Status Indications

The status LED has a very simple and traditional design.

LED Indicator	Radio Status
Constant Red	Transmitting.
Constant Green	Receiving.

4.4 Main keypad controls

- **[CALL] key:** Press it for a short time to turn on the FM radio. Press it again to turn it off.
  If you press it for a long time you will activate the alarm function. Press it again to turn off this feature.
- **[Monitor] key:** Press it for a short time to light up the flashlight. If you push this button again, the flashlight will light up to strobe mode. Press MONI a third time to turn off the flashlight.
  To activate the Monitor function presses the button for a long time.
- **[VFO / MR] key:** Press it for switches between Frequency (VFO) Mode and Memory (MR) mode. Memory mode is sometimes also referred to as Channel mode.
  To save frequencies to channel memory you must be in Frequency (VFO) mode.
- **[A/B] key:** Press it for switches between A (upper) and B (lower) displays. The frequency or channel on the selected display

becomes the active listening and transmit frequency or channel.

To save frequencies to channel memory you must be on the A display.

When listening to broadcast FM, the broadcast FM is 88-108 MHz band.

- **[MENU]** key: it is used for activating the MENU, choose each MENU selection and confirm the parameter.
- **[▲]** key: Press it for more than 2 seconds, the channel and frequency will move upwards rapidly; in SCAN mode, press this control to move the scanning upwards.
- **[▼]** key: Keep it pressed it for more than 2 seconds, the channel and frequency will move downwards rapidly; in SCAN mode, press this control to move the scanning downwards.
- **[EXIT]** key: push this button to exit the functions and settings.
- **Numeric keypad**

With these keys you can input the information or your selections on the radio. In tx mode, push the number keys to send a corresponding DTMF code.

- ***SCAN Key**

A short momentary press of the key enables the reverse function.

When listening to broadcast FM a momentary press will start the scanning. Scanning in broadcast FM will stop as soon as an active station is found, regardless of scanner resume method.

To enable the scanner, press and hold the **[*SCAN]** key for about two seconds.

- **Zero 0 Key**

The features a battery voltage meter that the current voltage of the battery on the display. To see the voltage displayed, press and hold the **[0SQL]** key for about two seconds.

• **#TTO key**

If you press this button for more than 2 seconds you will lock/unlock the keypad.

5. BASIC OPERATIONS

5.1 Power on the radio

To turn the unit on, simply rotate the **volume/power** knob clockwise until you hear a "click". If your radio powers on correctly there should be an audible double beep after about one second and the display will show a message or flash the LCD depending on settings for about one second. Then it will display a frequency or channel. If the Voice prompt is enabled, the voice will announce "frequency mode" or "channel mode".

Turn the **volume/power** knob counter-clock wise all the way until you hear a "click". The unit is now off.

5.2 Adjusting the volume

To turn up the volume, turn the **volume/power** knob clock-wise. To turn the volume down, turn the **volume/power** knob counter-clock-wise. Be careful not to turn it too far, as you may inadvertently turn your radio off.

5.3 Making a call

NOTE: Press the [A/B] key to switch the main channel to the other channel if there is 2 channels shown on the display. Press the [VFO/MR] key to switch between VFO and channel display.

• Channel mode call: After selecting a channel, hold down the **[PTT]** key to initiate a call to the current channel. Speak into the microphone with normal tone. Initiate a call, the red LED is on.

• Frequency mode call: Press the **[VFO/MR]** key to switch to the frequency mode, the frequency range allowed entering,

press the **[PTT]** key, a call to the current channel. Speak into the microphone with normal tone. Initiate a call, the red LED is on.

- Receive a call: When you release the **[PTT]** key, you can answer it without any action.
  When receiving a call, the green LED is on.

NOTE: To ensure the best reception volume, keep the distance between the microphone and the mouth at the time of transmission from 2.5 cm to 5 cm.

5.4 Channel selection

There are two modes of operation: Frequency (VFO) mode, and Channel or Memory (MR) mode.
For everyday use, Channel (MR) mode is going to be a whole lot more practical than Frequency (VFO) mode. However, Frequency (VFO) mode is very handy for experimentation out in the field. Frequency (VFO) mode is also used for programming channels into memory.
In Channel (MR) mode you can navigate up and down the channel by using the ▲ and ▼ keys.
Ultimately which mode you end up using will depend entirely on your use case.

5.5 Frequency (VFO) mode

In Frequency (VFO) mode you can navigate up and down the band by using the ▲ and ▼ keys. Each press will increment or decrement your frequency according to the frequency step you've set your transceiver to.
You can also input frequencies directly on your numeric keypad with kilohertz accuracy.
The following example assumes the use of a 12.5 kHz frequency step.

Example. Entering the frequency 452.6125 MHz on display *A*

a. Use the **[VFO/MR]** key to switch to Frequency (VFO) mode.
b. Press **[A/B]** until the ▲ icon appears next to the upper display.
c. Enter **[4][5][2][6][1][2][5]** on the numeric keypad.

WARNING!

Just because you can program in a channel does not mean you're automatically authorized to use that frequency. Transmitting on frequencies you're not authorized to operate on is illegal, and in most jurisdictions a serious offence. If you get caught transmitting without a license you can and will get fined, and in worst case sent to jail. However, it is legal in most jurisdictions to listen. Contact your local regulatory body for further information on what laws, rules and regulations apply to your area.

5.6 Channel (MR) mode

The use of Channel (MR) mode is dependent on actually having programmed in some channels to use.
Once you have channels programmed and ready, you can use the ▲ and ▼ keys to navigate between channels.

6. ADVANCED FEATURES

6.1 Frequency scanning

This function can scan the frequency.

a. In frequency mode, press **[*/scan]** key for more than 2 seconds. The radio will start scanning the frequency according to the set frequency step.

b. You can change the scanning direction with the ▲ and ▼ keys.

c. Press any key to stop the scanning.

Note: for Scan mode, see Menu No.18.

6.2 Channel scanning

This function can scan the channels.

a. In channels mode, press **[*scan]** key for more than 2 seconds. The radio will start scanning according to the channel you

set.

b. You can change the scanning direction with the ▲and ▼ keys.

c. Press any key to stop scanning.

Note: for Scan mode, see Menu No.18.

6.3 Search CTCSS/DCS Code

With this function you can search and store the CTCSS/DCS code used by other radios.

Procedure:

a. In frequency mode press **[MENU]+[1][1].**

b. Press **[MENU]** key again.

c. Press **[*scan]** key; CT will blink on the display.

d. When another radio is transmitting, the display will show the CTCSS/DCS code.

e. After searching the CTCSS code, the radio will beep and stop scanning.

f. After setting, press **[MR/VFO]** key for confirmation and store, or press **[PTT]** or **[EXIT]** key to return to standby mode.

NOTE 1: the DCS scanning has the same procedure of CTCSS code, but you have to select MENU+10 to enter scanning.

NOTE 2: if CTCSS has not searched the code, you can search using the DCS mode.

6.4 Cursor▼▲Conversion (A/B)

Directly press **[A/B]** key to move the cursor up and down. Then, you can modify or confirm the parameters indicated by the cursor.

Important1: UV5R PRO has a dual-frequency display function. In frequency mode, you will see on the display two different receiving and transmitting frequencies; while in channel mode the two different channels will be displayed.

Important2: In frequency or channel mode, press the **[A/B]** key to shift between the main channel A and the sub-channel B ▲ on the display indicates on which channel (main channel A or sub channel B) you are operating.

▼ is displayed next to the channel.

6.5 High/low power fast selection

In channel mode, press **[#TTO]** key to shift between high and low power.

6.6 Keypad lock

This function locks the keypad to prevent accidental pressure of the controls.
To unlock the keypad, press **[#TTO]** for more than 2 seconds.

6.7 FM Radio (FM)

The frequency range to listen to the radio is 88-108MHz. When listening to broadcast FM
a. In frequency or channel mode, Press **[CALL]** to turn on the radio.
b. Select the desired radio frequency with the ▲ or ▼ keys or input the frequency. or
- Press [*** SCAN**] to automatically search a radio station.

c. Press [**CALL**] to exit FM radio.
Note: while you are listening to the radio, the frequency or channel of A / B receiving signal will automatically switch to the frequency or channel mode for normal transmitting and receiving. (For USA version, only 88-108MHz can be selected) When the signal disappears the radio will automatically switch again to FM radio mode.

6.8 Flashlight

This function is very useful for night illumination.
To turn it on press MON; push it again, the flash light will be strobe; push it again: it will turn off.

6.9 1000Hz, 1450Hz, 1750Hz Tone-burst

To send out a tone-burst; you simultaneously will press a key while holding down the PTT. No further configuration required using this feature.
The following configurations will transmit accordingly:

- **[PTT]** + **[CALL]** = Transmits 1000Hz Tone Burst
- **[PTT]** + **[VFO/MR]** = Transmits 1450Hz Tone Burst
- **[PTT]** + **[A/B]** = Transmits 1750Hz Tone Burst

If you have the keypad lock enabled on your radio, you can still send a 1750Hz tone the regular way without having to unlock your radio.

6.10 Manual Programming (Channels Memory)

Memory channels are an easy way to store commonly used frequencies so that they can easily be retrieved at a later date. The eatures 128 memory channels that each can hold: Receive and transmit frequencies, transmit power, group signaling information, bandwidth, ANI/ PTT-ID settings and a six character alphanumeric identifier or channel name [1] .

Frequency Mode vs. Channel Mode
Switch between Modes by Using the **[VFO/MR]** Front Panel Button.
These two modes have different functions and are often confused.

Frequency Mode (VFO) : Used for a temporary frequency assignment, such as a test frequency or quick field programming if permitted.
Channel Mode (MR) : Used for selecting preprogrammed channels.
Ex 1. Programming a Channel Repeater Offset with CTCSS Tone

EXAMPLE New memory in Channel 10:
RX = 452.000 MHz

TX = 457.000 MHz (This is a (+ 5) Offset)
TX CTCSS tone 123.0

a. Change from Menu to Menu by pressing the **[EXIT]** key.

b. Set radio to VFO Mode by pressing **[VFO/MR]**
Channel number at the right will disappear.

c. [MENU] [2][8] [MENU] [1] [0] [MENU] [EXIT] **Deletes Prior Data in channel (Ex. 10)**

d. [MENU] [1][3] [MENU] 123.0 **[MENU] [EXIT]** **Selects desired TX encode tone**

e. Enter RX frequency (Ex. **452000**)

f. [MENU] [2][7] [MENU] [1][0] [MENU] **Enter the desired channel (Ex 10)**
-->>[EXIT] **RX has been added**

g. Enter TX frequency (Ex. **457000**)

h. [MENU] [2][7] [MENU] [1][0] [MENU] **Enter the same channel (Ex 10)**
-->> [EXIT] **TX has been added**

i. [VFO/MR] Return to MR Mode. **Channel number will re-appear.**

Ex 2. Programming a Simplex Channel with CTCSS tone

EXAMPLE New memory in Channel 10:
RX = 456.000 MHz
TX CTCSS tone 123.0

a. Change from Menu to Menu by pressing the **[EXIT]** button.

b. Set radio to VFO Mode by pressing **[VFO/MR]**
Channel number at the right will disappear.

c. [MENU] [2][8] [MENU] [1] [0] [MENU] [EXIT] **Deletes Prior Data in channel (Ex. 10)**

d. [MENU] [1][3] [MENU] 123.0 [MENU] [EXIT] **Select desired TX encode tone (Ex 123 CTCSS)**
-->>Use **[A/B]** to select Upper display

e. Enter RX frequency (Ex. 456000)

f. [MENU] [2][7] [MENU] [1][0] [MENU] **Enter the desired channel (Ex 10)**

-->> [EXIT] **Channel has been added**

g. [VFO/MR] Return to MR Mode. Channel number will re-appear.

6.11 Repeaters Programming

The following instructions assume that you know what transmit and receive frequencies your repeater employs, and that you're authorized to use it.

a. Set the radio to Frequency (VFO) mode with the **[VFO/MR]** key.

b. Enter the repeater's output (your receiving) frequency by either using the ▲ and ▼ keys, or by entering it directly on the numerical keypad.

c. Press the **[MENU]** key to enter the menu.

d. Enter **[2][6]** on the numeric keypad to get to frequency offset.

e. Press **[MENU]** key to select.

f. Use the numerical keypad to enter the specified frequency offset. See the section called "26 OFFSET - Frequency shift amount" for details.

g. Press **[MENU]** to confirm and save.

h. Enter **[2][5]** on the numeric keypad to get to offset direction.

i. Use the ▲/▼ keys to select + (positive) or - (negative) offset.

j. Press **[MENU]** to confirm and save.

k. Optional:

a). Save to memory, see the section called "Manual programming" for details.

b). Set up CTCSS; see the section called "CTCSS" for details.

l. Press **[EXIT]** to exit the menu. If everything went well, you should be able to make a test call through the repeater.

NOTE:
If you're experiencing problems making a connection to the repeater, check your settings and/or go through the procedure again.
Certain Amateur Radio repeaters (especially in Europe) use a 1750Hz tone burst to open up the repeater. To see how this is done , see the section called “1750Hz Tone-burst”.
If you're still unable to make a connection, contact the person in charge of the radio system with your employer or your local amateur radio club, as the case may be.
If you for some reason want to listen to the repeater's input frequency instead, press **[*/SCAN]** key momentarily and you'll reverse your transmit and receive frequencies.
This is indicated in the LCD on the radio with an R in the top row, next to the + and - for the offset direction.

7. WORKING THE MENU SYSTEM

For a complete reference on available menu items and parameters, see **Appendix C, Shortcut Menu operations.**
Note: in channel mode, the setting of these features is not possible: CTCSS/ DCS tones, PTT-ID, Busy channel lock out, channel name edit.

7.1 Basic use

Using the menu with arrow keys
a. Press the **[MENU]** key to enter the menu.
b. Use the [▲] and [▼] keys to navigate between menu items.
c. Once you find the desired menu item, press **[MENU]** again to select that menu item.
d. Use the [▲] and [▼] keys to select the desired parameter.
e. When you've selected the parameter you want to set for a given menu item;
  a). To confirm your selection, press **[MENU]** and it will save your setting and bring you back to the main menu.
  b). To cancel your changes, press **[EXIT]** and it will reset that menu item and bring you out of the menu entirely.
f. To exit out of the menu at any time, press the **[EXIT]** key.

7.2 Using short-cuts

As you may have noticed if you looked at **Appendix C, Shortcut Menu operations**, every menu item has a numerical value associated with it. These numbers can be used for direct access of any given menu item.
The parameters also have a number associated with them, see **Appendix C, Shortcut Menu operations** for details.
Using the menu with short-cuts
a. Press the **[MENU]** key to enter the menu.

b. Use the numerical keypad to enter the number of the menu item.
c. To enter the menu item, press the **[MENU]** key.
d. For entering the desired parameter you have two options:
  a). Use the arrow keys as we did in the previous section; or
  b). Use the numerical keypad to enter the numerical short-cut code.
e. And just as in the previous section;
  a). To confirm your selection, press **[MENU]** and it will save your setting and bring you back to the main menu.
  b). To cancel your changes, press **[EXIT]** and it will reset that menu item and bring you out of the menu entirely.
f. To exit out of the menu at any time, press the **[EXIT]** key.
g. All further examples and procedures in this manual will use the numerical menu short- cuts.

7.3 Functions and operations

(1) Squelch level (SQL) - MENU No.0

Thanks to this function you can adjust the squelch in 10 different levels:

- **level 0**: opened squelch. With this setting, UV5R PRO will detect all signals, also the weakest ones, but will also receive the background noise or undesired signals.
- **levels 1- 9**: level 1 (lowest squelch level), level 9 (highest squelch level).

If the squelch is set to the highest level, the radio will receive the strongest signals only.

(2) Step frequency (STEP) - MENU No.1

This function lets you select the desired frequency step.
The selectable steps are the following: 2.5/5.0/6.25/10.0/12.5/20.0/25.0/50.0 KHz
Note: in channel mode, this function cannot be modified.

(4) Battery save (SAVE) - MENU No.3

The power save feature enables a reduction in the consumption of the battery when the radio is in standby.
You have 5 selections available: OFF / 1:1 / 1:2 / 1:3 / 1:4.
For example: 1:1 = 1s' working and 1s'battery saving. 1:2 = 1s' working and 2s' battery saving.

(5) VOX Function (VOX) - MENU No.4

This function allows hands-free conversations: just speak in the direction of the microphone and the communication will be automatically activated.
You can choose amongst 11 levels: OFF-10. 1 is the highest level, 10 is the lowest one.
Note: the higher is the level, the higher is the microphone sensitivity. The VOX function cannot be modified in SCAN and FM radio mode.

(7) Backlight (ABR) - MENU No. 6

With this function you can adjust the auto off time of the display backlight (1-5s).
Note: we suggest you setting 4-5s levels.

(8) Dual Watch Operation (TDR) - MENU No. 7

When this function is activated, you can receive the frequency of channel A and channel B at the same time.
If a signal is detected, the▼/▲ pointer will blink on the corresponding channel or frequency.
Note: In Dual Watch operation mode, you can change the parameter of AB channel or frequency freely.

(9) Keypad beep (BEEP) - MENU No. 8

When this function is enabled, every time a button is pressed, you will hear a beep tone.

(10) Time-Out-Timer (TOT) - MENU No.9

The TOT function is used to prevent a too long transmission and limits the tx time: TOT temporarily stops the transmission if the radio has been used beyond the max pre-set time (for example 15s, 30s, 45s, etc).

(11) Receiving DCS (R-DCS) - MENU No.10

DCS codes are similar to access codes and can be added to channels, so as to create a sort of personal channel. They enable the radio to communicate with the users that are tuned on the same channel and have set the same DCS code.
You can choose amongst:

- **OFF:** OFF
- **R-DCS:** D023N-D754N (Normal DCS)
- **R-DCS:** D023I-D754I (Inverse DCS)

Note: In UV5R PRO there are 208 groups of normal and inverse DCS codes. This function cannot be amended in channel mode.

(12) Receiving CTCSS (R-CTCSS) - MENU No.11

As DCS codes, the CTCSS codes can be added to the channels for creating new private channels.
Note: there are 50 groups of CTCSS tones. In channel mode the CTCSS tones cannot be changed.

(13) Transmitting DCS - (T-DCS) - MENU No.12

In this Menu you activate DCS codes in tx mode. You can choose between normal R-DCS (D023N-D754N) and inverted R-DCS (D023I-D754I)
Note: the groups of DCS codes are 208. DCS codes cannot be changed in channel mode.

(14) Transmitting CTCSS (T-CTCSS) - MENU No.13

In this Menu you can set a CTCSS tone in tx mode.
You can choose: OFF or CTCSS (67.0 to 254.1 Hz)
Note: there are 50 groups of CTCSS tones. In channel mode the CTCSS tones cannot be changed.

(15) Voice function (VOICE) - MENU No. 14

With this function, you activate a voice that informs you about any operation/ selection you are doing.

(16) ANI-ID (ANI-ID) - MENU No.15

With this function you can set your ID-code. It can be programmed by the proper programming software. You can edit up to 5 digits.

(17) DTMFST (DTMFST) - MENU No.16

Determines when DTMF Side Tones can be heard from the transceiver speaker.

(18) Signal code (S-CODE) - MENU No.17

Selects 1 of 15 DTMF codes. The DTMF codes are programmed with software and are up to 5 digits each.

(19) SCAN Resume Mode (SC-REV) - MENU No.18

Thanks to this function, UV-5R PRO can SCAN in frequency or channel mode. You can choose amongst three options:

TO: Time-operated SCAN

Whenever a signal is detected, the radio will suspend the SCAN for 5 seconds, and then will continue to SCAN even if the signal is still present.

CO: Carrier-operated SCAN

Whenever a signal is detected, the radio will stop scanning. It will resume to SCAN once the signal will disappear.

SE: Search SCAN

The radio will stop scanning once a signal is detected.

(20) PTT-ID (PTT-ID) - MENU No.19

With this function you can decide when sending the ANI-ID code in tx mode.

You can choose amongst 4 possibilities.

- **OFF:** press PTT to turn it off
- **BOT:** the code is sent when you press the PTT
- **EOT:** the code is sent when the PTT is released
- **BOTH:** the code is sent when you press and release the PTT

Note: select 'OFF' when using in case of affecting the radio.

(21) PTT ID delay (PTT-LT) - MENU No.20

In this MENU you can set the delay time (0-30ms) sending the PTT-ID.

Note: select '0' in normal using.

(22) Channel A Display Mode (MDF-A) - MENU No.21

This function is used to set the display mode of channel A.

Display modes:

- **FREQ.:** Frequency + channel No.
- **CH:** Channel number
- **NAME:** Channel name

Note: Channel name mode must be set by the programming software. Up to three numbers or characters can be edited.

(23) Channel B Display Mode (MDF-B) - MENU No.22

This function is used to set the display mode of channel B.

Display modes:

- **FREQ.:** Frequency + channel No.
- **CH:** Channel number
- **NAME:** Channel name

Note: Channel name mode must be set by the programming software. Up to three numbers or characters can be edited.

(24) Busy Channel Lock (BCL) - MENU No. 23

When this function is on, it may prevent other radios' interference. If the selected channel is being used by other radios, when you press key PTT, your radio cannot transmit.
Release the PTT and transmit as soon as the frequency is no longer busy.

(25) Auto Keypad Lock (AUTOLK) - MENU No.24

When this feature is activated, the keypad will be automatically locked after 15s; this prevents accidental pressure of any keys.

(26) Frequency offset direction (SFT-D) - MENU No.25

Using this function, you can set the direction of the frequency offset in rx and tx.
You have the following options:
+: Positive offset;
-: Negative offset;
OFF: no offset
Note: you should set different frequency deviation according to the repeaters selected. This function is not enabled in channel mode.

(27) Frequency offset (OFFSET) - MENU No. 26

In this MENU you can set the deviation between tx and rx. The frequency offset of this radio is 0-69.990MHz.

(28) Channel store - (MEM-CH) - MENU No. 27

When the radio is in frequency working mode or standby mode, input the desired frequency or parameters directly.
To set a CTCSS tone or a DCS code in tx or rx on the stored channel, refer to paragraphs MENU 10-13
Note: You cannot overwrite a stored channel; you have to delete it first. See following paragraph No.28.

(29) Channel Delete (DEL-CH) - MENU No.28

In this menu you can delete a channel of the radio.

(30) Standby backlight (WT-LED) - MENU No.29

In this MENU you can choose the color of the backlight when the radio is in standby mode.
You can choose amongst:

- **OFF** (backlight off)
- **BLUE**
- **PURPLE**
- **ORANGE**

(31) RX backlight (RX-LED) - MENU No. 30

In this MENU you can choose the backlight color when the radio is receiving.
You can choose amongst:

- **OFF** (backlight off)
- **BLUE**
- **PURPLE**
- **ORANGE**

(32) TX backlight (TX-LED) - MENU No.31

You can choose the backlight color when the radio is transmitting.
Available colors:

- **OFF (backlight off)**
- **BLUE**

• **PURPLE** • **ORANGE**

(33) Alarm Mode (AL-MOD) - MENU No.32

This function can set the tone alarm/code alarm/site alarm of the radio.
Keep pressed the **[CALL]** key for 3 seconds to start the alarm tone.
The following three options can be selected:

- **SITE:** the speaker emits an alarm tone but the radio doesn't transmit;
- **TONE:** the speaker emits an alarm tone and the radio transmits it;
- **CODE:** the speaker emits an alarm tone and the radio transmits it followed by ANI-ID code.

(34) Frequency band (BAND) - Menu No.33

In frequency mode, press the **[BAND]** key to choose the desired frequency band.
VHF: 150 - 174MHz
UHF: 400 - 480MHz
Note: This function is applicable to some models with [BAND] key.

(35) Dual Watch (TDR-AB) - Menu No.34

When this function is on, you may receive signals of A/B channel or frequency. It can also be used for cross band receiving and transmitting. You can choose amongst the following settings:
OFF: UV5R PRO can receive in both VFO (not simultaneously); ▲ or ▼ will blink on the transmitting frequency band.
A: the radio can receive in both VFO (not simultaneously) but can transmit in VFO A only.
B: UV5R PRO can receive in both VFO (not simultaneously) but can transmit in VFO B only.
If you choose option A, it means that 432.5875MHz is the tx frequency band, while 145.550MHz is the rx frequency band; the upper VFO shows 452.5875 MHz while in the lower VFO 155.550MHz will be displayed; you can receive on both

452.5875 MHz and 155.550 MHz, but can transmit on 452.5875 MHz only.
While if you choose option B, 155.550MHz is the tx frequency band and 452.5875MHz is the rx frequency band. In the upper VFO 452.5875 MHz will be displayed while the lower VFO will show 155.550 MHz; you can receive on both 452.5875 MHz and 155.550 MHz, but transmit on 155.550 MHz only. Example: the LCD displays

(36) Side tone elimination (STE) - Menu No. 35

This feature is helpful to eliminate the annoying audio tone after the transmission is finished (end transmission noise muffler).

(37) Side tone elimination in communication through repeater (RP-STE) - Menu No. 36

This function is used when the radio operates through a repeater; when the PTT is released, the repeater will emit the end transmission tone to confirm it is working.
Available settings:
OFF 1,2,3,4,5,....10 to set the delay time.
Note: Please disable this function in normal using, lest affect your normal conversation.

(38) Delay time of side tone elimination in communication through repeater (RPT-RL) - Menu No.37

With this function you have the confirmation that the repeater has transferred the signal. You can choose amongst: OFF 1,2,3,4,5,….10 to set the delay time.

(39) Display mode at the turning on (PONMSG) Menu No.38

With this function you can set the display mode when the radio is turned on. Available options:

- **FULL:** full frequency character is displayed.
- **MSG: UV5R PRO is displayed.**

(40) Roger beep (ROGER) - Menu No. 39

When the PTT is released, the radio will beep to confirm to other users that you have finished your transmission and that they can start talking.

(41) Reset (RESET) - Menu No.40

With this function you can reset the transceiver to the factory-programmed settings and parameters. After that, you can set the desired functions.
There are two types of reset:

- **VFO:** Menu Reset
- **ALL:** Menu and channel Reset

Appendix A. – Trouble shooting guide

Phenomena	Analysis	Solution
You cannot turn on the radio.	The battery may be installed improperly.	Remove and reattach the battery.
	The battery power may run out.	Recharge or replace the battery.
	The battery may suffer from poor contact caused by dirty or damaged battery contacts.	Clean the battery contacts or replace the battery.
During receiving, the voice is weak or intermittent.	The battery voltage maybe low.	Recharge or replace the battery.
	The volume level may be low.	Increase the volume.
	The antenna maybe loose or maybe installed incorrectly.	Turnoff the radio, and then remove and reattach the antenna.
	The speaker maybe blocked.	Clean the surface of the speaker.
You cannot communicate with other group members.	The frequency or signaling type maybe inconsistent with that of other members.	Verify that your TX/RX frequency and signaling type are correct.
	You may be too far away from other members.	Move towards other members.
You hear unknown voices or noise.	You may be interrupted by radios using the same frequency.	Change the frequency, or adjust the squelch level.
	The radio in analog mode maybe set with no signaling.	Request your dealer to set signaling for the current channel to avoid interference
You are unable to hear anyone because of too much noise and hiss.	You may be too far away from other members.	Move towards other members.
	You may be in an unfavorable position. For example, your communication may be blocked by high buildings or blocked in an underground area.	Move to an open and flat area, restart the radio, and try again.
	It may be the result of external disturbance (such as electromagnetic interference).	Stay away from equipment that may cause interference.
The radio keeps transmitting.	VOX may be turned on or the headset is not installed in place	Turn off the VOX function. Check that the headphones are in place.

NOTE: If the above solutions cannot fix your problems, or you may have some other queries, please contact your dealer for more technical support.

Appendix B. - Technical Specifications

General

Frequency Range	150-174 & 400-480MHz (Tx) 136-174&400-520MHz (Rx)
Memory Channel	128 Groups
Operation Voltage	DC 7.4 V ±10%
Battery Capacity	1800mAh (Li-Ion)
Frequency Stability	±2.5ppm
Operating Temperature	-20℃ to +50℃
Mode of Operation	Simplex
Antenna Impedance	50ohm

Transmitter Part

RF Output Power	≤2W
FM Modulation	11K0F3E@12.5KHz
Adjacent Channel Power	60dB @ 12.5KHz
Transmission current	≤1500mA

Receiver Part

Receive Sensitivity	0.25µV (12dB SINAD)
Adjacent Channel Selectivity	≥55dB@12.5KHz
Inter Modulation and Rejection	≥55dB@12.5KHz
Conducted Spurious Emission	≤-57dB@12.5KHz
Rated Audio Power Output	1W @16 ohms
Receive current	≤380mA
Rated Audio Distortion	≤5%

NOTE: All specifications may be modified without prior notice or liability. Thank you.

Appendix C. - Shortcut Menu operations

MENU No.	Name (Full Name)	Enter item	LCD display	Select able
0	SQL - Squelch Level	MENU+0	▲SQL 3	0-9 Levels 0:Lowest 9:Highest
1	STEP –Step Frequency	MENU+1	▲STEP 2.5K	2.5K/5.0K/6.25K/10.0K 12.5K/20.0K/25.0K/50.0K
3	SAVE - Battery Saving	MENU+3	▲SAVE 3	OFF: 1:1 2:2 3:3 4:4
4	VOX - VOX	MENU+4	▲VOX OFF	OFF, 1-9 OFF: off 1:Highest Sensitivity 9:Highest Sensitivity
6	ABR –Auto Backlight	MENU+6	▲ABR 5	OFF/1,2,3…8，9,10 ***Time-out for the LCD backlight. (seconds)**
7	TDR – Dual Watch Operation	MENU+7	▲TDR OFF	OFF ON ***Monitor [A] and [B] at the same time. The display with the most recent activity ([A] or [B]) becomes the selected display.**

8	BEEP - Keypad Beep	MENU+8	▲BEEP 8 ON	OFF ON ***Allows audible confirmation of a key press.**
9	TOT- Time-Out-Timer	MENU+9	▲TOT 9 60	15,30…600S ***This feature provides a safety switch that limits transmission time to a programmed value. This will promote battery conservation by not allowing you to make excessively long transmissions, and in the event of a stuck PTT switch it can prevent interference to other users as well as battery depletion**
10	R-DCS - Receiver DCS	MENU+10	▲R-DCS 10 OFF	OFF D023N…D754N D023I …D754I ***Mutes the speaker of the transceiver in the absence of a specific low-level digital signal. If the station you are listening to does not transmit this specific signal, you will not hear anything.**
11	R-CTCS - Receiver CTCSS	MENU+11	▲R-CTCS 11 OFF	OFF 67.0HZ…254.1HZ ***Mutes the speaker of the transceiver in the absence of a specific and continuous sub-audible signal. If the station you are** **Listening to does not transmit this specific and continuous signal, you will not hear anything.**
12	T-DCS -Transmitter DCS	MENU+12	▲T-DCS 12 OFF	OFF D023N…D754N D023I …D754I ***Transmits a specific low-level digital signal to unlock the squelch of a distant receiver (usually a repeater).**

13	T-CTCS - Transmitter CTCSS	MENU+13	▲T-CTCS 13 OFF	OFF 67.0HZ…254.1HZ ***Transmits a specific and continuous sub audible signal to unlock the squelch of a distant receiver (usually a repeater).**
14	VOICE - Voice Reminding	MENU+14	▲VOICE 14 OFF	OFF CHI ENG ***Allows audible voice confirmation of a key press.**
15	ANI-ID -ANI-ID	MENU+15	▲ANI-ID 15 80808	It can be programmed by software
16	DTMFST - DTMFST	MENU+16	▲DTMFST 16 DT+ANI	OFF: No DTMF Side Tones are heard DT-ST : Side Tones are heard only from manually keyed DTMF codes ANI-ST: Side Tones are heard only from automatically keyed DTMF codes DT+ANI : All DTMF Side Tones are heard
17	S-CODE - Signal Code	MENU+17	▲S-CODE 17 1	1,…,15
18	SC-REV - Scanner Resume Method	MENU+18	▲SC-REV 18 TO	TO : Time Operation - scanning will resume after a fixed time has passed CO : Carrier Operation -scanning will resume after the signal disappears SE : Search Operation -scanning will not resume

19	PTT-ID - PTT-ID	MENU+19	▲PTT-ID 19 OFF	OFF: No ID is sent BOT: The selected S-CODE is sent at the beginning EOT: The selected S-CODE is sent at the ending BOTH : The selected S-CODE is sent at the beginning and ending
20	PTT-LT – PTT ID delay	MENU+20	▲PTT-LT 20 5	0,1,2…,50ms ***PTT-ID Delay (milliseconds)**
21	MDF-A - Channel A Display Mode	MENU+21	▲MDF-A 21 FREQ	FREQ: Displays programmed Frequency CH: Displays the channel number NAME: Displays the channel name ***Note: Names must be entered using software.**
22	MDF-B - Channel B Display Mode	MENU+22	▲MDF-B 22 FREQ	FREQ: Displays programmed Frequency CH: Displays the channel number NAME: Displays the channel name ***Note: Names must be entered using software.**
23	BCL – Busy Channel Lock-out	MENU+23	▲BCL 23 OFF	OFF ON ***Disables the [PTT] button on a channel that is already in use. The transceiver will sound a beep tone and will not transmit if the [PTT] button is pressed when a channel is already in use.**
24	AUTOLK –Automatic Keypad Lock	MENU+24	▲AUTOLK 24 OFF	OFF ON ***When ON, the keypad will be locked if not used in 8 seconds. Pressing the [#TTO] key for 2 seconds will unlock the keypad.**

25	SFT-D – Frequency Offset Direction	MENU+25	▲SFT-D 25 OFF	OFF: TX = RX (simplex) +: TX will be shifted higher in frequency than RX - : TX will be shifted lower in frequency than RX
26	OFFSET -Frequency shift amount	MENU+26	▲OFFSET 26 00.000	00.000…69.990 ***Specifies the difference between the TX and RX frequencies**
27	MEM-CH - Store a Memory Channel	MENU+27	▲MEM-CH 27 000	000…127 ***This menu is used to either create new or modify existing channels (0 through 127) so that they can be accessed from MR/Channel Mode**
28	DEL-CH - Delete a memory channel	MENU+28	▲DEL-CH 28 000	000…127 ***This menu is used to delete the programmed information from the specified channel (0 through 127) so that it can either be programmed again or be left empty.**
29	WT-LED- Standby Backlight	MENU+29	▲WT-LED 29 BLUE	OFF/ BLUE/ ORANGE/ PURPLE
30	RX-LED- Receive Backlight	MENU+30	▲RX-LED 30 ORANGE	OFF/ BLUE/ ORANGE/ PURPLE
31	TX-LED- Transmit Backlight	MENU+31	▲TX-LED 31 PURPLE	OFF/ BLUE/ ORANGE/ PURPLE

32	AL-MOD - Alarm Mode	MENU+32	▲AL-MOD 32 SITE	SITE: Sounds alarm through your radio speaker only TONE: Sending alarm tone CODE: Sending alarm code
33	BAND - Band Selection	MENU+33	▲BAND 33 VHF	VHF:144-148,UHF:430-450 (Canadian IC standard) VHF:144-146,UHF:430-440 (EU CE standard) ***In VFO/Frequency mode, sets [A] or [B] to the VHF or UHF band.**
34	TDR-AB - Transmit selection while in Dual Watch mode	MENU+34	▲TDR-AB 34 A	OFF A band transmit (Upper row frequency) B band transmit (Bottom row frequency) ***When enabled, priority is returned to selected display once the signal in the other display disappears.**
35	STE - Squelch Tail Elimination	MENU+35	▲STE 35 ON	ON OFF ***This function is used eliminate squelch tail noise between handhelds that are communicating directly (no repeater). Reception of a 55 Hz or 134.4 Hz tone burst mutes the audio long enough to prevent hearing any squelch tail noise.**
36	RP-STE-Squelch Tail Elimination	MENU+36	▲RP-STE 36 OFF	OFF/ 1,2,3…10 ***This function is used eliminate squelch tail noise when communicating through a repeater.**
37	RPT-RL - Delay the squelch tail of repeater	MENU+37	▲RPT-RL 37 OFF	OFF/ 1,2,3…10 ***Delay the Tail Tone of Repeater (X100 milliseconds)**
38	PONMSG-Power On Message	MENU+38	▲PONMSG 38 MSG	FULL: Performs an LCD screen test at power-on MSG : Displays a 2-line power on message ***Controls the behavior of the display when the transceiver is turned on.**
39	ROGER - Roger Beep	MENU+39	▲ROGER 39 ON	OFF ON ***Sends an end-of-transmission tone to indicate to other**

				stations that the transmission has ended.
40	RESET – Restore defaults	MENU+40		VFO: Menu initialization ALL: Menu and channel initialization ***Resets the radio to factory defaults, with some exceptions.**

Disclaimer

The Company endeavors to achieve the accuracy and completeness of this manual, but no warranty of accuracy or reliability is given. All the specifications and designs are subject to change without notice due to continuous technological development. No part of this manual may be copied, modified, translated, or distributed in any manner without the prior written consent of the Company.

We do not guarantee, for any particular purpose, the accuracy, validity, timeliness, legitimacy or completeness of the third-party products and contents involved in this manual.

Print version: UV-5R Pro_FCC_V1