VISION Pro

iM3C Series
Level 2 AC EV Charging station

User Manual

UM15200-2-2025

IMPORTANT SAFETY INSTRUCTIONS

WARNING- When using electric products, basic precautions should always be followed, including the following. This manual contains important instructions for Models iM3C-09K6B, iM3C-11K5B, and iM3C-19K2B that shall be followed during installation, operation, and maintenance of the unit.

1. Read all the instructions before using this product.
2. This device should be supervised when used around children.
3. Do not put fingers into the electric vehicle connector.
4. Do not use this product if the flexible power cord or EV cable is frayed, has broken insulation, or any other signs of damage.
5. Do not use this product if the enclosure or the EV connector is broken, cracked, open, or shows any other indication of damage.
6. Indicate the ambient temperature rating, -35°C to 50°C.
7. **"CAUTION" and the following or equivalent:** "To reduce the risk of fire, connect only to a circuit provided with @ amperes maximum branch circuit overcurrent protection in accordance with the National Electrical Code, ANSI/NFPA 70, and the Canadian Electrical Code, Part I, C22.1."

   Note (@)

Model	Current Rating
iM3C-09K6B	40A
iM3C-11K5B	48A
iM3C-19K2B	80A

CONSIGNES DE SÉCURITÉ IMPORTANTES

AVERTISSEMENT- Lors de l'utilisation de produits électriques, des précautions de base doivent toujours être suivies, y compris les suivantes. Ce manuel contient des instructions importantes pour les modèles iM3C-09K6B, iM3C-11K5B, et iM3C-19K2B qui doivent être suivies pendant l'installation, l'utilisation et la maintenance de l'unité.

1. Lisez toutes les instructions avant d'utiliser ce produit.
2. Cet appareil doit être surveillé lorsqu'il est utilisé à proximité d'enfants.
3. Ne mettez pas les doigts dans le connecteur du véhicule électrique.
4. N'utilisez pas ce produit si le cordon d'alimentation flexible ou le câble EV est effiloché, a une isolation cassée ou tout autre signe de dommage.
5. N'utilisez pas ce produit si le boîtier ou le connecteur EV est cassé, fissuré, ouvert ou montre toute autre indication de dommage.
6. Indiquez la température ambiante, de -35° C à 50 ° C.
7. **"MISE EN GARDE" et ce qui suit ou équivalent:** "Pour réduire le risque d'incendie, connectez uniquement à un circuit équipé d'une protection maximale contre les surintensités de circuit de dérivation de @ ampères conformément au Code national de l'électricité, ANSI / NFPA 70 et au Code canadien de l'électricité, Partie I, C22.1. "

   Noter (@)

Modèle	Note actuelle
iM3C-09K6B	40A
iM3C-11K5B	48A
iM3C-19K2B	80A

1. ABBREVIATIONS

S/N	Abbreviations	Description
1	**IEC**	International Electrotechnical Commission
2	**EV**	Electrical Vehicle, this can be BEV (battery EV) or PHEV (plug-in hybrid EV)
3	**EVSE**	Electric Vehicle Supply Equipment **[IEC61851-1]**
4	**OBC**	On-board charger (of an EV)
5	**kW**	Kilo Watt (unit of Power)
6	**A**	Ampere (unit of Current)
7	**V**	Volt (unit of Voltage)
8	**Hz**	Hertz (unit of Frequency)
9	**LCD**	Liquid Crystal Display
10	**LED**	Light-emitting Diode
11	**RFID**	Radio Frequency Identification
12	**CMS**	Central Management System, manages EVSE and has the information for authorizing users for using its EVSE.
13	**OCPP**	Open Charge Point Protocol A standard open protocol for communication between EVSE and a Central System and is designed to accommodate any type of charging technique. (www.openchargealliance.org)
14	**HMI**	Human-Machine Interface
15	**CCID**	Charging Circuit Interrupting Device
16	**GM/I**	Ground Monitor Interrupter
17	**GFCI**	Ground Fault Circuit Interrupter
18	**PnC**	Plug and Charger

2. SAFETY NOTES

2.1. Safety signs used

The following warning signs, mandatory signs and information signs are used in this manual, on and in the AC EV Charger.

Les panneaux d'avertissement, panneaux obligatoires et panneaux d'information suivants sont utilisés dans le manuel d'utilisation, sur et dans la station de charge EV:

CAUTION: Warning of electrical hazards.

This sign is intended to alert the user that severe personal injury or substantial property damage can result if the device is not operated as requested.

MISE EN GARDE: Avertissement de risques électriques.

Ce signe est destiné à alerter l'utilisateur que des blessures graves ou des dommages matériels importants peuvent survenir si l'appareil n'est pas utilisé comme demandé.

ATTENTION: Warning of a danger spot or dangerous situation.

This sign is intended to alert the user that minor personal injury or material damage can result, if the device is not operated as requested.

ATTENTION: Avertissement d'un point de danger ou d'une situation dangereuse.

Ce signe est destiné à alerter l'utilisateur que des blessures légères ou des dommages matériels peuvent survenir si l'appareil n'est pas utilisé comme demandé.

CAUTION: **Do not touch by hands in case of ESD.**

Indicates the possible consequences of touching electrostatically sensitive components.

MISE EN GARDE: En cas de décharge électrostatique, ne touchez pas à la main.

Indique les conséquences possibles du contact avec des composants sensibles à l'électricité statique.

No access for unauthorized persons.

Pas d'accès pour les personnes non autorisées.

Use protective footwear.

Utilisez des chaussures de protection.

Must wear a safety helmet.

Doit porter un casque de sécurité.

Indicates important texts, notes, or tips.

Représente un texte, une note ou un indice important.

2.2. Installation

Safety protection must be done when installing the EV Charger.

Une protection de sécurité doit être effectuée lors de l'installation de la station de charge EV.

- ▷ Installation must be carried out by personnel with professional qualification, otherwise there is a risk of electric shock.
  L'installation doit être effectuée par du personnel qualifié, faute de quoi il y a un risque d'électrocution.
- ▷ It shall be installed in the place without violent vibration and impact, and placed vertically to facilitate ventilation.
  Il doit être installé à l'endroit sans vibrations et chocs violents, et placé verticalement pour faciliter la ventilation.
- ▷ It shall be installed on noncombustible materials, or there is a risk of fire.
  Il doit être installé sur des matériaux incombustibles, ou il existe un risque d'incendie.
- ▷ Do not drop any foreign objects, especially metal objects, into the inside of the Charger or there is a risk of fire.
  Aucun objet étranger, en particulier un objet métallique, ne doit être placé dans le chargeur sans risque d 'incendie.

▷ The lead nose of the Charger must be securely attached or there is a risk of damaging the equipment.
Les fils du chargeur doivent être solidement connectés, faute de quoi le matériel risque d'être endommagé.

2.3. Maintenance

Personnel must always use protective footwear when maintenance work.
Le personnel doit toujours porter des chaussures de protection lors des travaux de maintenance.

▷ It is recommended that routine safety inspection visits to Charger be conducted at least once a week.
Il est recommandé que le chargeur fasse l'objet d'un contrôle de sécurité au moins une fois par semaine.

▷ Do not put inflammable, explosive, or combustible materials, chemicals, combustible steam, and other dangerous goods near the Charger, otherwise there is a risk of fire.
Il est interdit de placer des substances dangereuses telles que des matières inflammables, explosives ou inflammables, des produits chimiques, des vapeurs inflammables à proximité des chargeurs, faute de quoi il y a un risque d'incendie.

▷ Keep the charging adapter clean and dry and wipe with a clean, dry cloth if soiled. Do not touch the Charger with your hand when charged.
Maintenir l 'adaptateur de charge propre et sec, en cas de saleté, et l' essuyer avec une toile sèche propre.Ne touche pas le chargeur avec la main.

2.4. Operation

- Strictly forbidden for minors or persons of restricted capacity to approach the Charger to avoid injury.
  Il est strictement interdit aux mineurs ou aux personnes dont la capacité de mouvement est limitée d'avoir accès au chargeur pour éviter les blessures.
- Forced charging is strictly forbidden when the electric vehicle or Charger fails.
  La charge forcée est interdite en cas de panne du véhicule électrique ou du chargeur.

- Electric vehicle can only be charged with the engine off and stationary. Do not charge in rainy and thunderous weather.
  Le véhicule électrique ne peut être rechargé que si le moteur est éteint et statique.Il ne faut pas recharger les jours de pluie et les orages.
- It is strictly prohibited to use the Charger when the charging adapter or charging cables are defective, cracked, worn, broken or the charging cables is exposed. If you find any, please contact the supplier in time.
  L'utilisation de chargeur est strictement interdite lorsque l'adaptateur de charge ou le câble de charge présente des défauts, des défauts, des défauts, de l'usure, de la rupture ou de la nudité.En cas de découverte, veuillez contacter le fournisseur en temps voulu.

3. STANDARDS COMPLIANCE

3.1. Standard(s) for safety

- Conformer to UL 2594, 3rd, Ed., Issue Date: 2022-12-15.

3.2. AC Level 2 Charging

- According to SAE J 1772, VISION (the maximum output current is 80 A) was designed for AC Level 2 charging.

3.3. Charging mode and connection

- According to IEC 61851-1, the Charging mode of VISION is Mode 3, and charging connection is the Case C.

Mode 3 :

a method for the connection of an EV to an AC EV supply equipment permanently connected to an AC supply network, with a control pilot function that extends from the AC EV supply equipment to the EV.

Case C:

Connection of an EV to a supply network utilizing a cable and vehicle connector permanently attached to the EV charger.

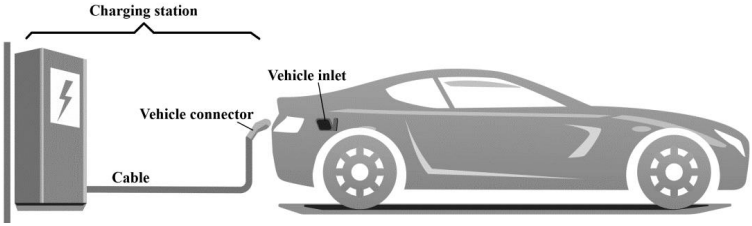

Fig. 3-1 Schematic diagram of CASE C connection

3.4. Charging interface

- The VISION charging plug complies with SAE J1772 / IEC 62196-2 Type 1 and SAE J3400 (NACS) standards.
- VISION can be optionally equipped with a Type 1 female plug and charging cable, which is only suitable for charging electric vehicles with a Type 1 charging socket (vehicle inlet).
- Alternatively, VISION can be configured with a NACS charging cable, compatible with electric vehicles that feature a NACS charging socket (vehicle inlet).

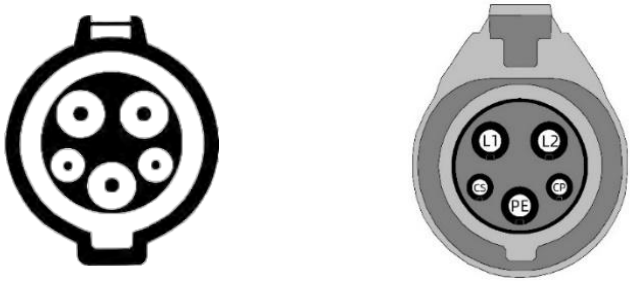

(a) Socket **(b) Plug**

Fig. 3-2-1 Schematic diagram of Type 1 interface

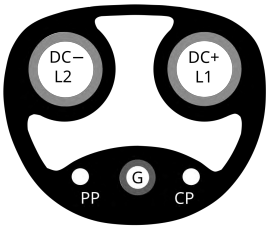

Fig. 3-2-2 Schematic diagram of NACS interface

4. PRODUCT INFORMATION

4.1. General

Welcome to use Level 2 AC EV charger VISION by our company.

4.1.1. Shape & dimensions

- The shape & dimensions of VISION shown as Fig. 4-1.

Fig. 4-1 The shape & dimensions of VISION

4.1.2. Model number definition

The model number definition of charger follows the rules as shown in Fig. 4-3.

i	M3C	-□□□□	B	
				B: Vision Pro
				Rated output power 09K6: 9.6kW 11K5: 11.5kW 19K2: 19.2kW
				M3C: Wallbox shell code
				i: Injet New Energy

Fig. 4-2 Model number definition

4.2. Specifications

4.2.1. Electrical specifications

Model Number	iM3C-09K6B	iM3C-11K5B	iM3C-19K2B
Rated Voltage	240V/208V (AC Level 2 Charging), 50/60Hz		
Rated Current	40A	48A	80A
Rated Power	9.6kW (@240VAC)	11.5kW (@240VAC)	19.2kW (@240VAC)
Recommended MCB/MCCB	Dedicated circuit 50A，2-Pole	Dedicated circuit 63A，2-Pole	Dedicated circuit 100A，2-Pole
Recommended Input cable	Cable: 3×6 AWG, copper.	Cable: 3×4 AWG, copper.	Cable: 3×2 AWG, copper.
Charging interface	IEC 62196-2, Type 1 or SAE J3400 (NACS) plug with 5m cable ***Note: That cord extension sets are not be used.***		

4.2.2. Functional description

Charging Mode	Mode 3
Charging Control	Remote: "APP-controlled" Local: "Plug-and-Play"，"Card-controlled" or "POS-controlled"
Display Screen	4.3-inch LCD touch screen (display charging current, voltage, energy, charging time, state & fault information, etc.)
Indicator Lights	Multi-color atmosphere lights
Communication interface	WIFI (2.4GHz/5GHz), Ethernet (RJ-45), Bluetooth5.0, 4G(Optional) RS 485, USB，PLC
Communication protocol	OCPP 1.6J full + security 3, Modbus RTU，Modbus TCP，ISO 15118
Safety Protection	Surge protection, over temperature, over/under voltage, over current, ground protection
CCID built-in	Yes, CCID 20

4.2.3. Mechanical parameters

Mounting	Wall-mounted or pole-mounted (mounting pole is optional)
Net Weight	7.6kg
Dimension	H×W×D = 404mm × 284mm × 160mm
Color & Material	Black and Grey, PC
Enclosure rated	Type 4

4.2.4. Ambient conditions

Altitude	≤ 2000m （Safety design ≤3000m）
Storage temperature	-40 ~ 80℃
Operation temperature	-35 ~ 50℃ *
Relative humidity	≤ 98%RH, no water droplet condensation
Vibration	< 0.5G, no acute vibration and impaction
Installation location	Indoor or outdoor, good ventilation, no flammable, explosive gases

When the charging station is powered on at temperatures below -20°C, the display screen may initially appear black. This is a normal phenomenon. After being powered on for approximately 10 minutes, the screen should return to normal.

5. INSTALLATION

5.1. Unpacking

5.1.1. Packing list

Package	Quantity
AC EV Charging station	1 pc
Empty socket	1 pc
RFID card	2 pcs
Wall-mounting accessories (including A+B+C+D as Fig. 5-1 shown)	1 set
Quick Guide	1 pc
Quality certificate	1 pc
Torx screwdriver	2 pc
RS485 Waterpoof connecter	1 pc
Wire terminal	3 pcs

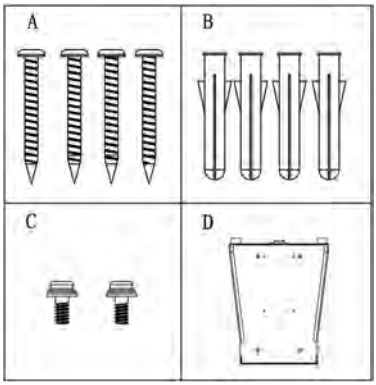

Fig. 5-1 Wall-mounting accessories

5.1.2. Inspection & confirm

When unpacking, please carefully confirm the following points:

- Whether the accessories are missing according to the packing list.
- Whether there is any damage during transportation.
- Whether the model and specification of the machine's nameplate are consistent with the order requirements.

▷ If any damage or missing parts are found, please do not start the machine, and contact the supplier as soon as possible.

▷ Please keep the packing box and packing materials 1 month for future handling.

▷ The paper packaging is recyclable.

5.2. Prepare

- When transporting or moving the EV charger, pay attention to the following points to ensure product safety:

▷ This product is electrical equipment. It should be handled with care to avoid violent vibration and impact.

▷ The charger shall not be transported by dragging the charging connector and the charging cable.

- To ensure the long-term stable operation of the product, it is

recommended to avoid installing chargers in extreme weather as far as possible, especially low or high ambient temperature may affect the installation effect due to thermal expansion and cold contraction.

- Space requirement: When the charger is fixed on the wall, the minimum space requirements are shown in Fig. 5-2.

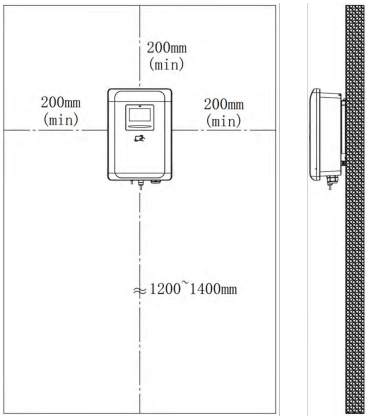

Fig. 5-2 Minimum space requirements for wall mounting

- It is suggested that the charger should be installed in a place with good ventilation, no direct sunlight and shelter from wind and rain. To ensure good ventilation condition, you should mount the charger vertically and leave enough space.
- Tools for installation

Prepare the following tools at least before installing the VISION AC EV Charging Station.

No.	Tools' Name	Schematic Picture	Main Uses
1	Multimeter		Check the electrical connection and measure the voltage
2	Electric Impact drill		Drill fixing holes in the wall
3	Wrench		Fastening bolt
4	Diagonal plier		Cut the cable

5	Wire stripper		Peeling cables
6	Crimping plier		Pressed cable terminal
7	Cross screwdriver		Fastening screw
8	Torx screwdriver		Fastening screw

5.3. Installation steps

5.3.1. Drill fixing holes

Drill 4 holes with diameter of 6mm and depth of at least 50mm on the wall as installation map.

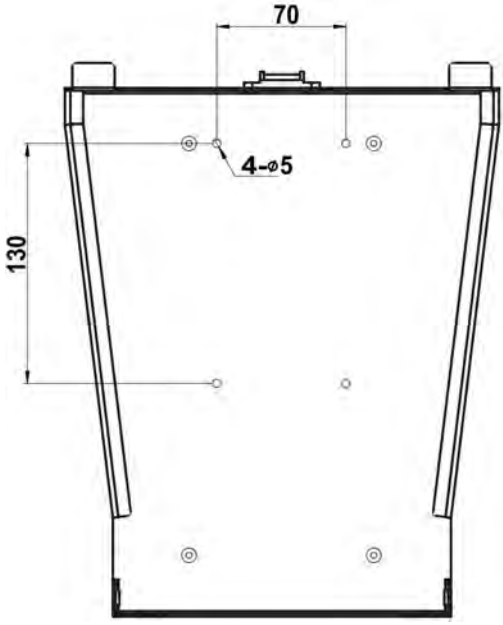

Fig. 5-3 Installation map

Install the Mounting Accessory-B Φ6 Expansion tube into the 4 holes.

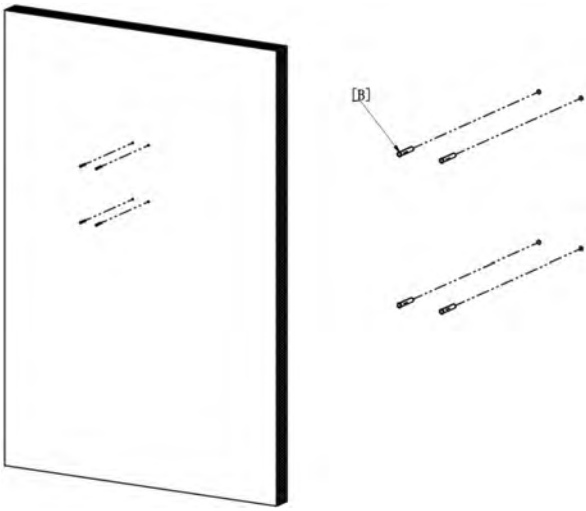

Fig. 5-4 Install expansion tube

5.3.2. Fix positioning plate

Use 4 screws Mounting Accessory-A to install the positioning plate D on the wall.

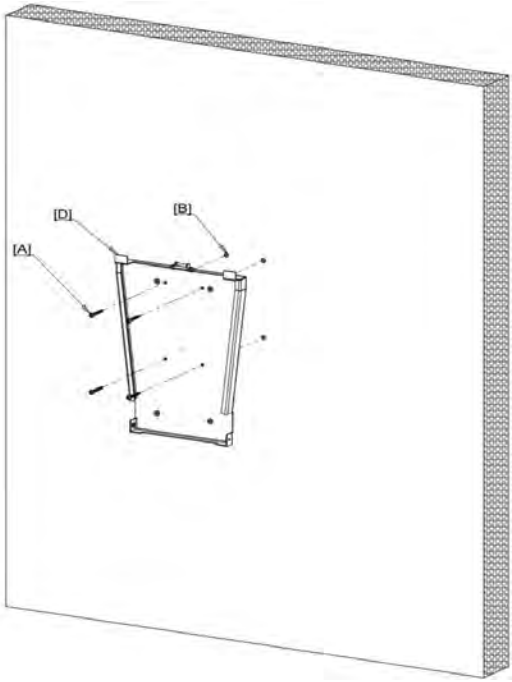

Fig. 5-5 Fix the plate

Make sure the bubble in the attached spirit level is positioned at the center during installation.

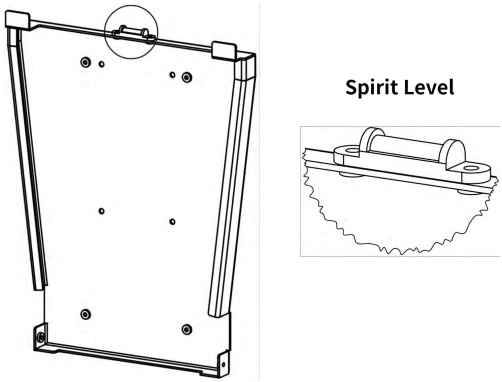

Fig. 5-6 Spirit level

5.3.3. Fix the Charging station

First step: Hang the charger onto mounting accessory D;

Second step: Use the installation accessory-C M4 screw to fix the charger.

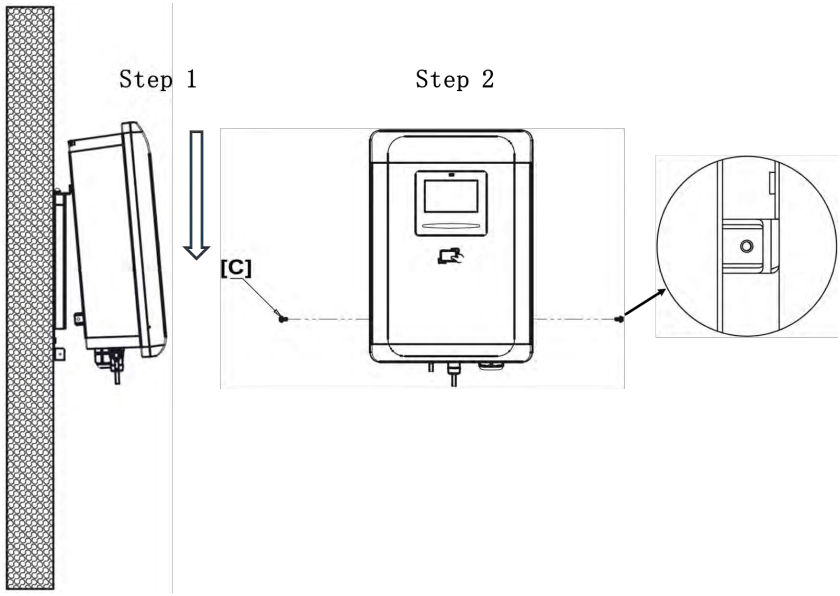

Fig. 5-7 Fix the charger

5.3.4. Open the cover

- Unfasten the button M3 screw with T10 Torx screwdriver as step [A],
- Pry off the front cover from the hole on the side with slotted screwdriver as step [B].

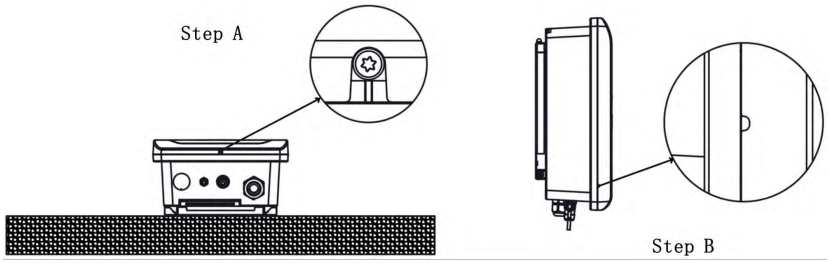

Fig. 5-8 Open the front cover

- Unfasten the six screws and remove the terminal cover.

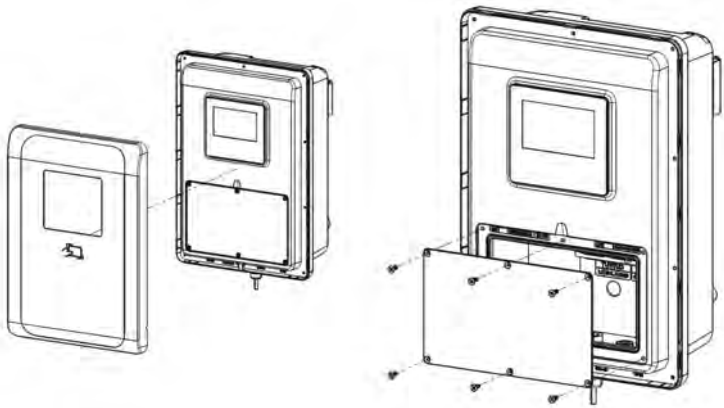

Fig. 5-9 Open the terminal cover

5.3.5. Wiring and additional features

■ **Wiring**

- Pass the prepared power cable through the input cable interface, and connect each wire to the corresponding input terminals labeled LA, LB, and GND as shown in Fig. 5-10.
- Ensure that the cables are correctly connected before powering on; otherwise, it may result in equipment damage, electrical faults, or safety hazards.
- Suggestions on cable size selection as below:

Sr No.	Product	Rated current	Recommended MCB/MCCB	Suggestion Cable size
1	iM3C-09K6B	40A	Dedicated circuit 50A , 2-Pole	Cable: 3x8 AWG, copper
2	iM3C-11K5B	48A	Dedicated circuit 63A , 2-Pole	
3	iM3C-19K2B	80A	Dedicated circuit 100A , 2-Pole	Cable: 3x6 AWG, copper

NOTE: Please use waterproof fittings, 1-inch conduit only.

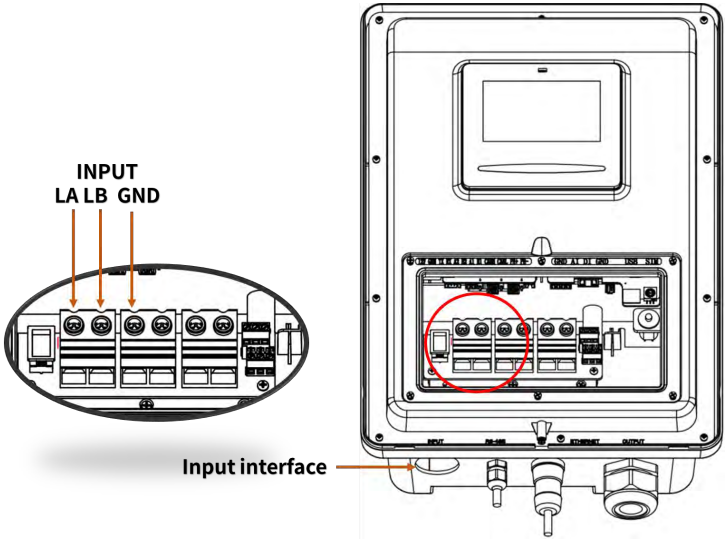

Fig. 5-10 wiring

■ **4G SIM card installation (Optional)**

Vision can be optionally equipped with a 4G cellular network for connecting to the CMS. You can insert a 4G NANO SIM card into the SIM card slot as shown in fig 5-11.

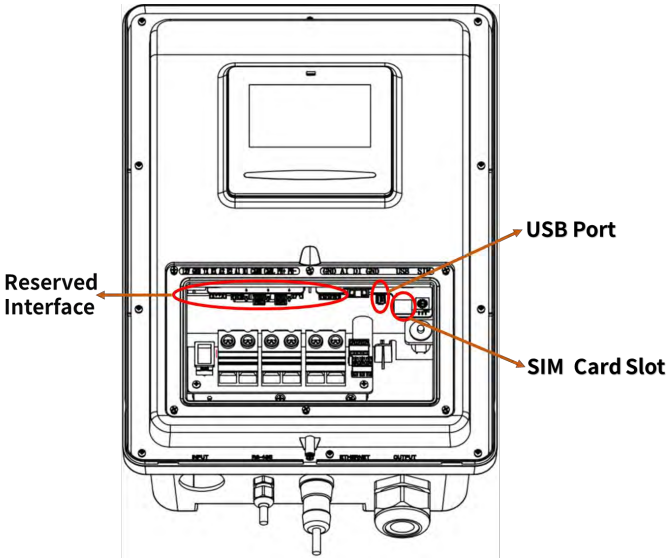

Fig. 5-11 Functional Interfaces

■ Payment terminal (Optional)

Vision can be optionally equipped with a payment terminal, currently supporting the Nayax UNO-mini POS device.

Fig. 5-12 Payment terminal

Power Supply and Communication

The UNO-mini can be powered and communicate with the Vision charger via a USB 2.0 connection , as shown in fig 5-11.

Installation

When the UNO-mini is selected as an option, it will be pre-installed on the wiring cover. Please open the terminal cover carefully to avoid damaging the internal wiring.

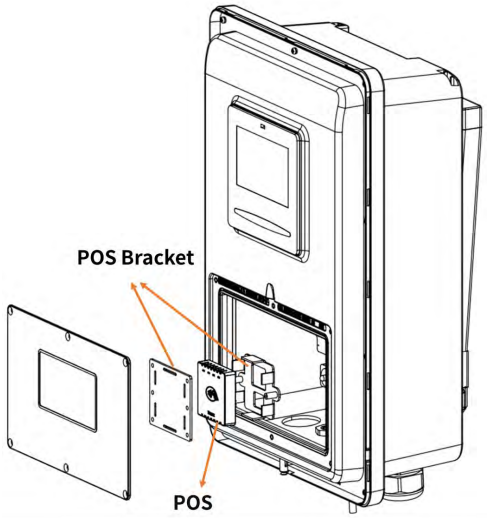

Fig. 5-12 Payment terminal

Payment Process

The UNO-mini operates in a local communication mode. The payment process is as follows:

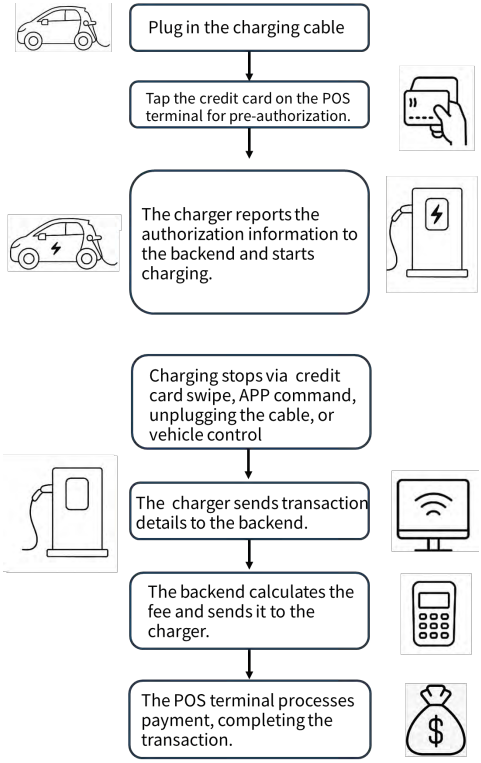

Fig. 5-10 Payment process

■ **Additional Features**

Vision is equipped with reserved RS485, CAN, AI, and DI interfaces. These can be used as needed and should be connected to the control device via the corresponding communication interface.

For more information, please contact your service provider.

5.3.6. Fix the Cover

Step A: Close the terminal cover and fasten the six screws;

Step B: Install the front cover on the charger

Step C: Fasten the button screw.

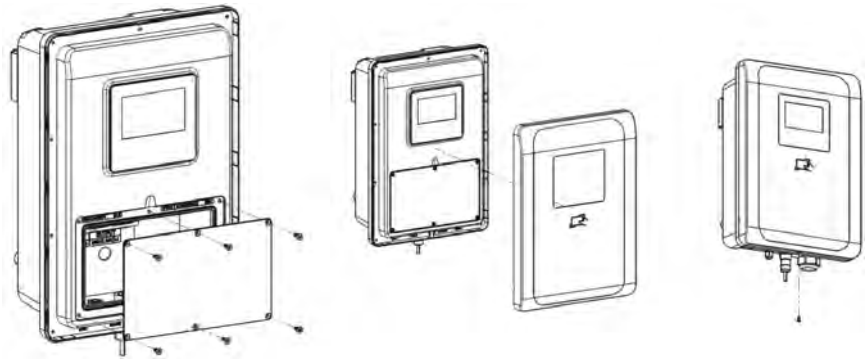

Fig. 5-9 Fix the Cover

5.4. Empty socket

The VISION AC EV charger can be configured with either a Type 1 or NACS charging connector.

When the charger is in standby mode, please insert the charging plug into the empty socket to protect the charging connector.

Use expansion screws to securely fix the empty socket in a suitable position next to the charging station.

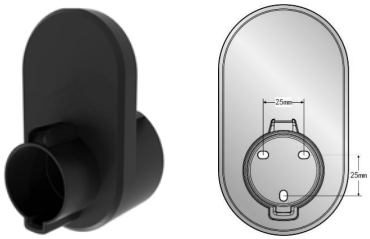

Fig. 5-10-1 Type 1 Empty socket

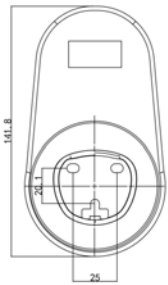

Fig. 5-10-2 NACS Empty socket

6. OPERATION

6.1. Power on

After the charger has been installed and confirmed, switch on the power supply. The light and screen lights up and the charger switches to standby state.

6.2. Human-Machine Interface

6.2.1. Overview

As shown in Fig. 6-1, VISION is configured with multiple human-machine interfaces.

①	Touch screen	②	LED indicator
③	RFID reader	④	Contactless Symbol for POS
⑤	Input cable	⑥	Ethernet interface
⑦	Communication interface	⑧	Charging cable

Fig. 6-1 HMI of VISION

6.2.2. LCD screen

Vision config a 4.3-inch LCD touch screen, which is mainly used to display various status information and set parameters of the charger shown as Fig. 6-2.

Icons or instructions in each display area

Fig. 6-2 Display of icons and instructions

In Fig. 6-2, there are some areas to display icons or instructions, with the specific meanings as follows:

NO.	Icon	Connotation
Area ①		
1	No icon	Off-line or no network
2		Connect to router via WIFI
3		Connect to router via Ethernet
4	4G	Connect to internet via 4G
5		Connect to OCPP server
6		Recurring Reservation Indicator
Area ②		
7	Totalizer: 232.2993 kWh	The totalizer of the charging station
Area ③		
8		Pricing
9		Language
Area ④		
10	41	Error code
11	8.58 V	CP voltage
Area ⑤		

12		Setting
13	Version:2.01.P2t5	The firmware version of the charging station
Area ⑥		
14	19.2kW AC	The maximum rate of energy transfer and type of current

As shown in Fig. 6-3, the LCD screen displays multiple types picture in normal charging process.

Standy

Connected

Starting

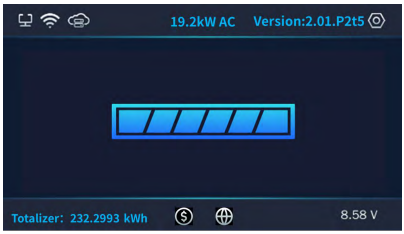

Charging

Finished

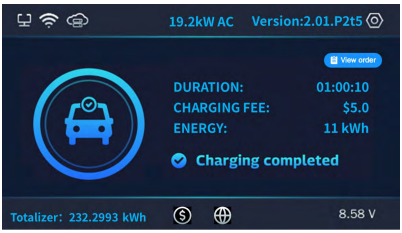

Fig. 6-3 Display of normal charging

If the charging process fails or the equipment fails, the picture displayed on the LCD screen is shown in Fig. 6-4.

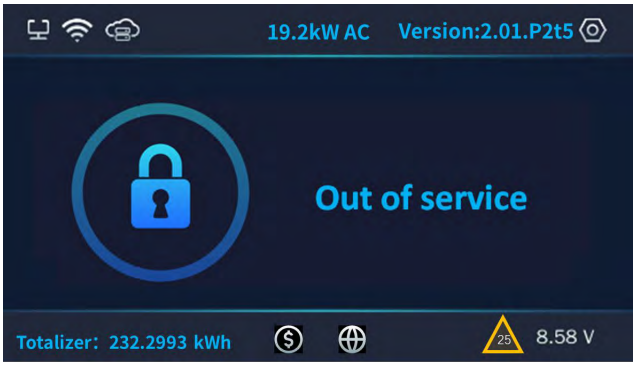

Fig. 6-4 Display of fault state

Payment terminal user interface (Optional)

VISION can be optionally equipped with a payment terminal.

To start charging with a credit card, tap the "Credit Card" button on the connection status screen to enter the POS UI, then follow the on-screen instructions to swipe the card and initiate charging.

Similarly, to stop charging with a credit card, tap the "Credit Card" button on the charging end screen to access the POS UI, and swipe the card as instructed to complete the charging session.

The status UI of the payment terminal is shown as Fig. 6-5.

Start charging by POS

Stop charging by POS

Idle for POS

Ready to read card

Card read successfully

Authorizing

Approved

Declined

Fig. 6-5 Display of POS

6.2.3. LED indicator

The LED indicator on the panel is used to indicate the status of the charger and the various combinations of indicators are described as below.

No.	Light Strip Colors	Light Strip Status	Connotation
1	Green	On	Standby state
		2s on, 2s off continuous alternation	Network configuration in progress
2	Blue	2s on, 2s off continuous alternation	Charging cable plugged in
		On	Charging state
3	Red	Fast twinkle	Ground fault status

6.2.4. RFID reader

In general, the charger is equipped with RFID card reader as standard, and the charging process can be started and stopped by using the RFID card (shown as Fig. 6-6) configured with the host. The special customized card swiping function is not separately described here.

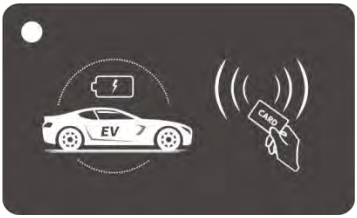

Fig. 6-6 RFID card

6.3. Config the parameters

6.3.1 Config parameters Via offline configuration page

- **Step 1: connect to Wi-Fi hotspot**
  - Restart the charging station;
  - Enable the Wi-Fi function on your phone or laptop;
  - Look for the Wi-Fi hotspot named "EVSE-XXXXXXXX" (where XXXXXXXX represents the last 8 characters of the charging station's serial number);
  - Connect to the hotspot with password 12345678.

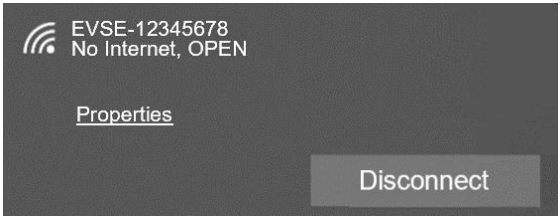

Fig. 6-7 Connect the AP

- **Step 2: login to configuration page**
- Open your phone or laptop's browser and fill in the website "**192.168.4.1**".
- Fill the default password and login;
- The default password is the last 8 characters of the second line of the QR code. Please check the QR code sticker on the side of the device, For example, the password is the 8 characters in the red box: '72f79d77'.

Fig. 6-8 The default password

■ **Step 3: Config your EV Charger**

Please change the password upon your first login. As shown in Fig. 6-8 set the parameters on this page.

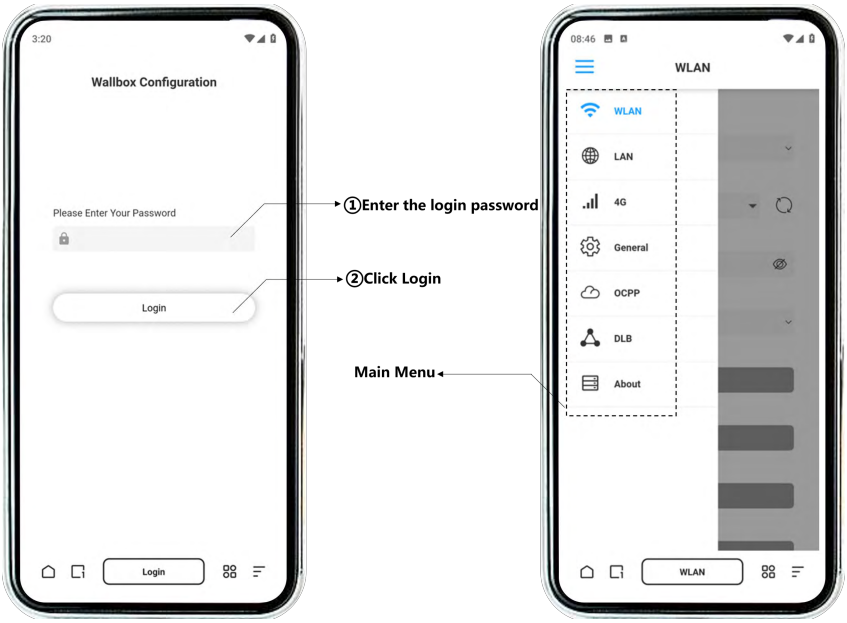

Fig. 6-9 Login Web & Main Menu Interfaces

■ WLAN Setting Interface

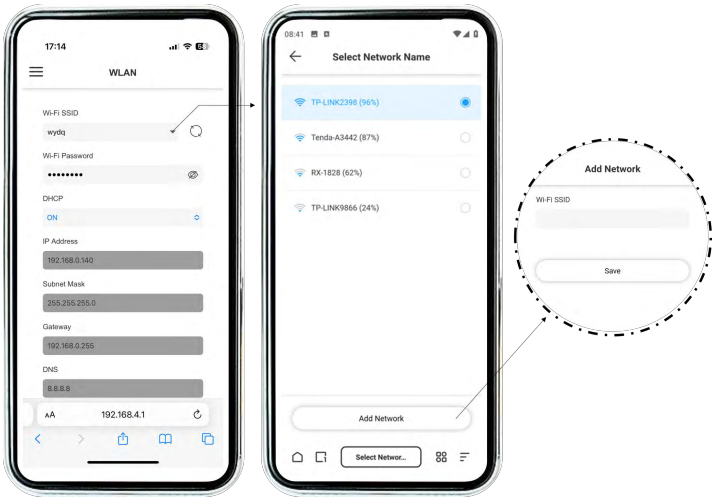

Fig. 6-10 WLAN Setting Interface

■ LAN Setting Interface

Users can select the on/off state of the DHCP function as needed.

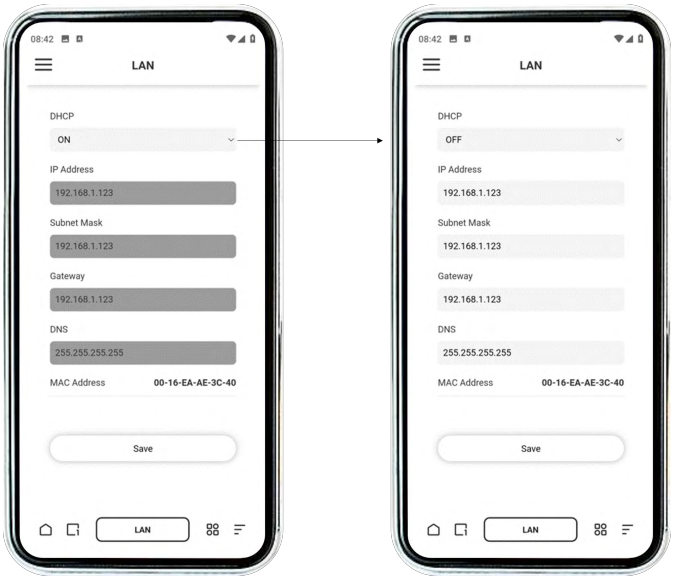

Fig. 6-11 LAN Setting Interface

■ 4G/OCPP/About Setting Interfaces

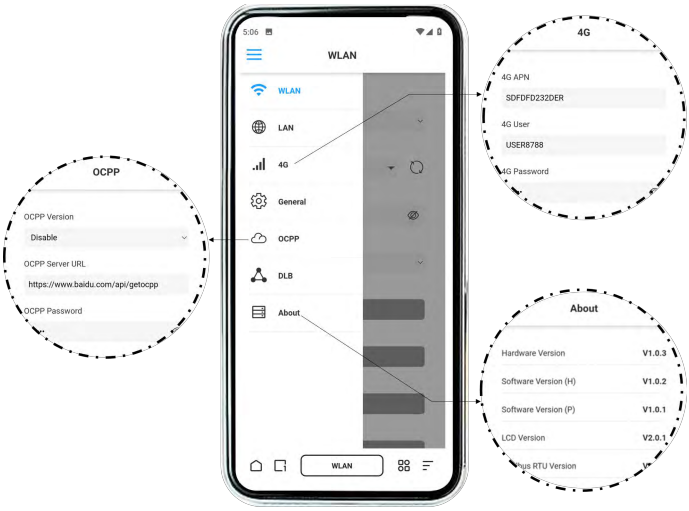

Fig. 6-12 4G/OCPP/About Setting Interfaces

■ General Setting Interface

Users can set the screen brightness, screen off time, and other parameters according to demand, After setting, click the "SAVE" button to save the settings, and click the "Reboot" button to restart charging station.

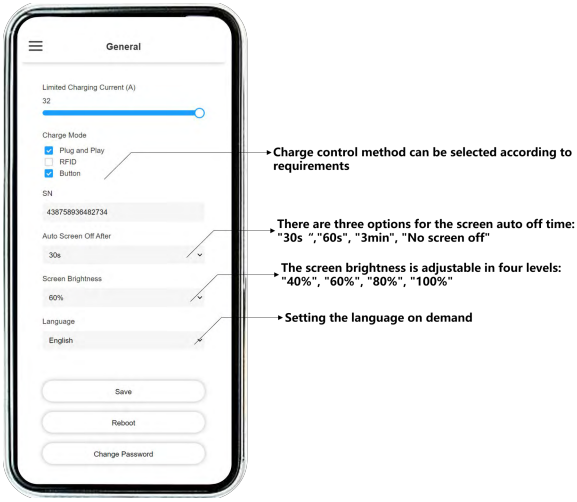

Fig. 6-13 General Setting Interface

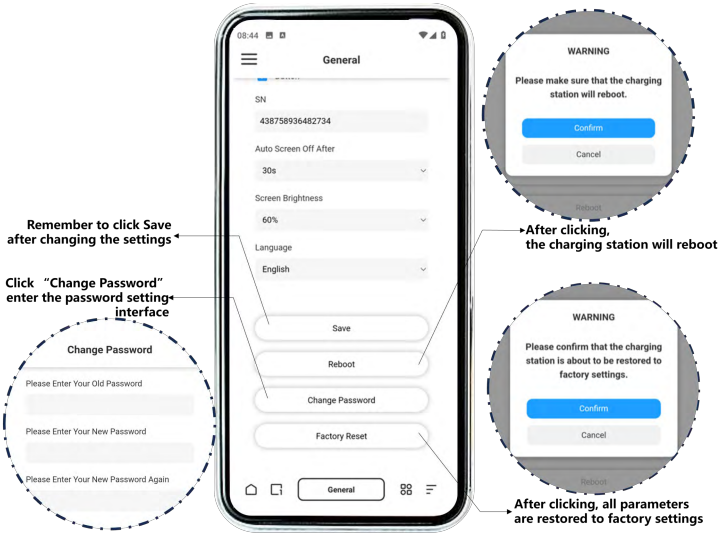

Fig. 6-14 General Setting Interface

■ **DLB Setting Interface**

There are three options available for DLB Mode: "Solar Logic & DLB", "Power Share" and "Customer logic". Product configuration can be selected according to the corresponding function

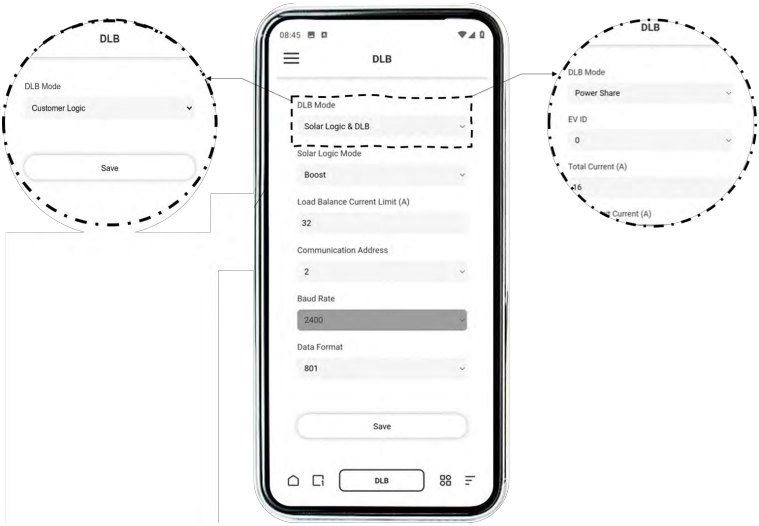

Fig. 6-15 DLB Setting Interface

6.3.2 Config parameters Via touch screen

■ **Step 1: Enter login interface**

Click the button to enter the settings login interface.

Fig. 6-16 Enter Login interface

■ **Step 2 : Login to setting page**

The default login password is the same as that for the configuration page. For details, please refer to Section 6.3.1.

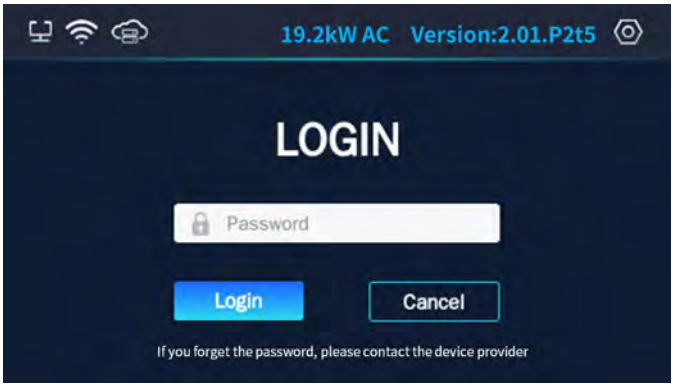

Fig. 6-17 Login setting interface

■ **Step 3 : View and configure**

Users can configure the charging station or view its information.

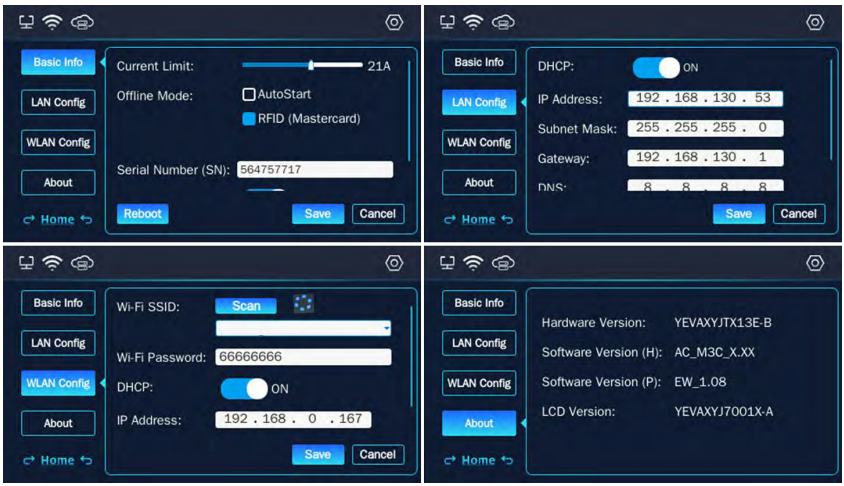

Fig. 6-18 Set parameters to config the EV charger

6.3.3 Config parameters Via WE E-Charge application.

■ **Step 1: Download the WE E-Charge**

Use phone' s camera or browser to scan the corresponding QR code to download the APP. Or search in Google Play or App Store.

▷ If you want to scan QR code on the screen to start charging, please download and install the *WE E-Charge* APP on your smart phone.

WE E-Charge

▷ For Android phone, search "WE E-Charge" in Google Play Store or scan the QR code on the right to install APP.

GET IT ON Google Play

▷ For iPhone, search **"WE E-Charge"** in APP Store or scan the QR code on the right to install APP.

Download on the App Store

▷ The user manual of APP please refer to the FAQ of APP.

Step 2: Log-in

Follow the instructions on the screen to log in to the APP, then scan the QR code, connect the charger.

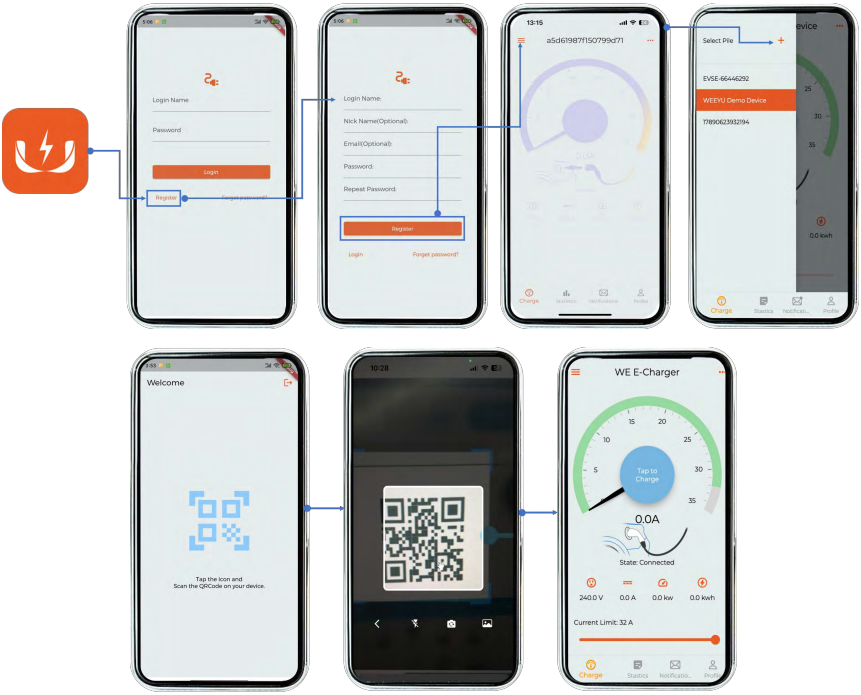

Fig. 6-19 Log-in instructions

■ **Step 3: Configuration WLAN via Bluetooth**

a) Click the configuration button, the App will connect to the Bluetooth and enter the WLAN configuration interface.

b) Tap the network button, select the WLAN to which the charging station needs to be connected, and then enter the password

c) Wait for the charging station to connect to the network after configuration finishing.

Fig. 6-20 Configuration WLAN via Bluetooth

6.4. Start Charging

- Park your EV into place, turn off, and put the EV under braking.
- Pick off the charging connector form empty socket of EV charger.
- As shown in Fig.6-21, plug the charging connector into the AC charging socket of the EV.

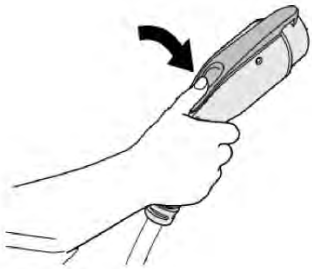

Fig. 6-21 Plug into EV socket

- For the charging control mode of "Plug-and-Play" the charging will start automatically after EV connector plug in.
- For the charging control mode of "Card-controlled", "POS-controlled" or "APP-controlled", you can control charging process by swipe RFID card, credit card or APP after charging connector plug in.

6.5. Stop Charging

- The charging station will automatically stop when the electric vehicle is fully charged.
- For the mode of "Plug-and-play" charging station, you can manually stop charging.
- For the mode of "Card-controlled" or "POS-controlled", swipe your RFID card or credit card again.

- For the mode of "scan QR code" charging station, click the stop button on your APP, the charging will stop.
- When the charging is end, please unplug the charging connector and plug back to the empty socket of charging station.

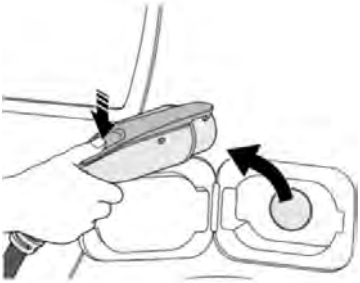

Fig. 6-22 Unplug the charging plug

6.6. Abnormally stop charging

- Forced fault stop: A fault stops initiated by the onboard charger of vehicle.
- Automatic fault stops: A fault stops initiated by the charger.

7. FAULT HANDLING AND MAINTENANCE

7.1. Fault Handling

The charger is automatically protected in the event of the fault. The fault information and handling methods are as follows.

Fault code	Handling method
Fault code 11: CP voltage anomaly	● Check the connection of charging plug and socket. ● Disconnect and reconnect the charging plug.
Fault code 13: Undervoltage input	● Check whether input plug is reliably connected. ● Check whether the input voltage is abnormal.
Fault code 14: Overvoltage input	● Check whether the input voltage is abnormal.
Fault code 15: Over-temperature protection	● Check whether the charger is covered or installed in a high temperature environment.
Fault code 16: Metering fault	● Power off and restart the device.
Fault code 17: Leakage protection	● Check whether the charging plug, charging cable and EV socket are damaged or wet. ● Power off, disconnect and reconnect the charging plug and restart.
Fault code 18: Output shortage	● Check whether the charging plug and its cables are damaged or wet.
Fault code 19: Output overcurrent	● Check whether the charging connector is correctly connected. ● Check whether the OBC is normal. ● Check the set of output maximum current.
Fault code 23: Relay sticking	● The device is damaged and needs to be returned to the factory for repair.
Fault code 24: CCID sensor fault	● The sensor is damaged and needs to be returned to the factory for repair.
Fault code 25: Ground fault	● Charger is not grounded; input power socket and input plug need to be checked.
Fault code 30:	● Check that the G and L wires are not reversed

Fault code	Handling method
L and G reverse fault	
Fault code 32: Relay fault	● The device is damaged and please ask the after-sales staff for help
Fault code 34: Grid Frequency Fault	● Check Grid Frequency
Fault code 37: Main Power Loss	● Check whether the input power supply is abnormal.
Fault code 41: Input Undervoltage	● Check whether the input cable is connected correctly. ● Check whether the input voltage is abnormal.
Fault code 42: High Temperature Current Limit Alarm	● Check that the charging station is not covered or that the ambient temperature is too high.

7.2. Maintenance

To ensure the long-term stable operation of the equipment, please maintain the equipment regularly (usually every month) according to the operating environment.

a) The equipment is maintained by professionals.

b) Check whether the equipment is well grounded and safe.

c) Check whether there are potential safety hazards around the charging pile, such as whether there are high temperature, corrosion or inflammable and explosive articles close to the charger.

d) Check whether the join point of the input terminal is in good contact and whether there is any abnormality. Check whether other terminal points are loose.

8. Moving and Storage

8.1. Moving

To avoid damage to the product , do not have severe vibration or impact during transportation.

8.2. Storage

If the product is not used immediately after purchase, and short-term or long-term storage is required, the device should be stored in a dry, well-ventilated indoor place, ignoring high temperature, humidity, dust, and metal powder environments.

9. Appendix

9.1. OPTIONAL FUNCTIONS

VISION is equipped with an RS485 communication interface that supports Dynamic Load Balancing (DLB).

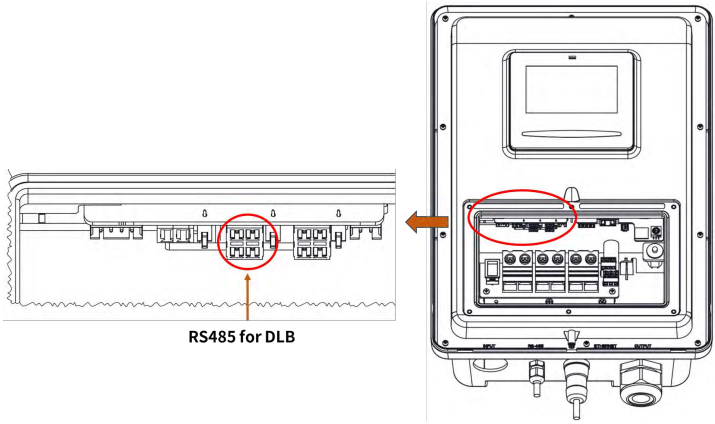

Fig. 9-1 RS485 for DLB

The DLB function can be implemented in the following ways:

- Connecting an external smart meter: Enables PV-priority operation and household dynamic load balancing when integrated with a photovoltaic system.
- Connecting multiple chargers via an RS485 bus: Allows power sharing among charging stations.

Since the device has only one RS485 interface, only one DLB mode can be used at a time.

9.1.1. Solar charging + Dynamic load balance via smart meter

- **Energy Meter**

Fig. 9-2 Energy Meter and CT

■ Wiring Methods :

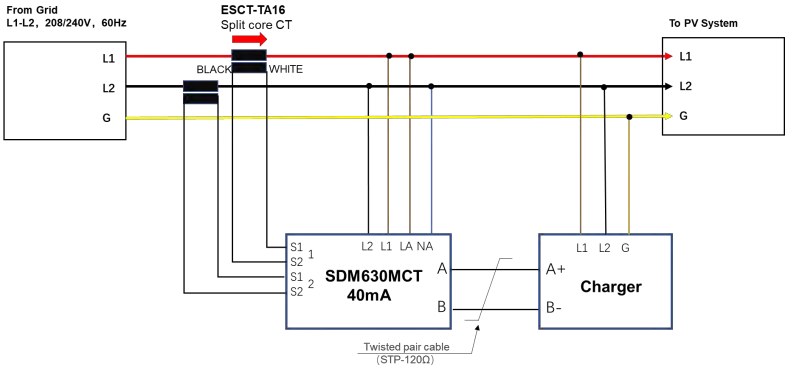

Fig. 9-3 Wiring of meter

■ **Operation**

a) **Set the Solar logic Charging mode and DLB Current limit Method :**

■ users need to log in configuration page, select the I setting interface, select "**sc logic & DLB**" for the DLB mc how to log in to the configurat page, please refer to chapter 6.(this manual

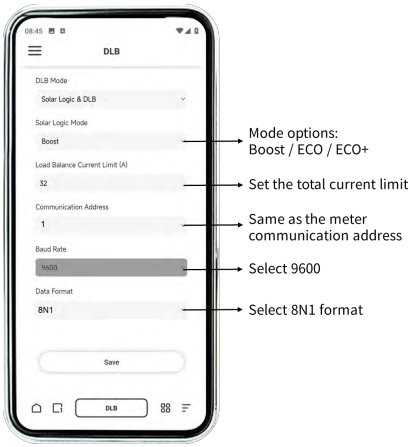

Fig 9-4 Solar logic & DLB in configuration page

■ set the relevant parameters by demand.

■ or use WE E-Charge APP setting the solar charging mode. Connect INJET ECO charging station with the mobile phone through Bluetooth, and then scan the QR code on the side of the charging station with WE E-Charge APP to binding; In the "Settings" menu of WE E-Charge APP, you can set the parameters of solar charging

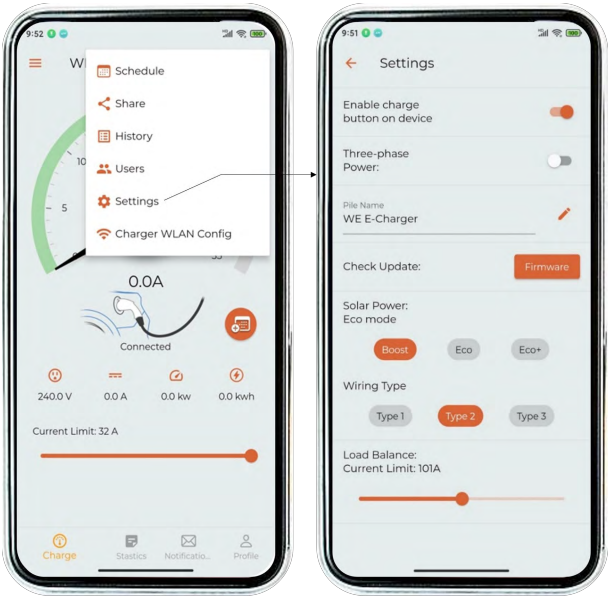

Fig.9-5 Solar Logic and DLB Settings in the App

b) Charging mode of Solar logic

Mode	Description	Energy source
BOOST	Maximum charging power, the maximum charging current = the set current of charging station, the charging current is irrelevant to the output current of PV system.	Only Grid Or only PV system Or Grid + PV system
ECO+	Most economical charging, all charging energy comes from PV system. And if the grid-connected current of PV system < 6A, the charging will stop automatically.	Only PV system
ECO	If the grid-connected current of PV system ≥ 6A, the charging current only comes from the PV system, and the charging current = grid-connected current of PV system.	Only PV system
	If the grid-connected current of PV system < 6A, the charging current = 6A. The charging current which cannot be provided by the PV system comes from the grid energy.	Grid + PV system

9.1.2. Dynamic load balance via Power Share

■ Feature Overview

A master charging station can be connected with up to nine slave charging stations via the RS485 bus.

The maximum shared current is set on the master station. Once any station starts charging, the master

will dynamically allocate the charging current to ensure that the total current of all stations, including itself, does not exceed the configured shared current limit.

■ RS485 Bus Wiring

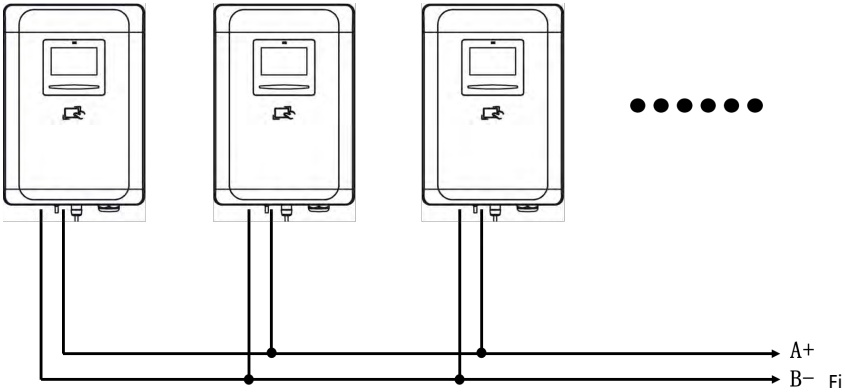

g. 9-6 RS485 Wiring of power share

■ Operation

Users need to log in the configuration page, select the DLB setting interface, select "Power Share" for the DLB mode.

The master charging station needs to be set with ID "0" and then configure the maximum current.

The slave charging stations need to be set with IDs "1–9" and configure the maximum safety current.

When communication is abnormal, the charging station will operate within the maximum safety current to ensure that the total power remains within the set range.

How to log in to the configuration page, please refer to the chapter 6.6 of this user manual.

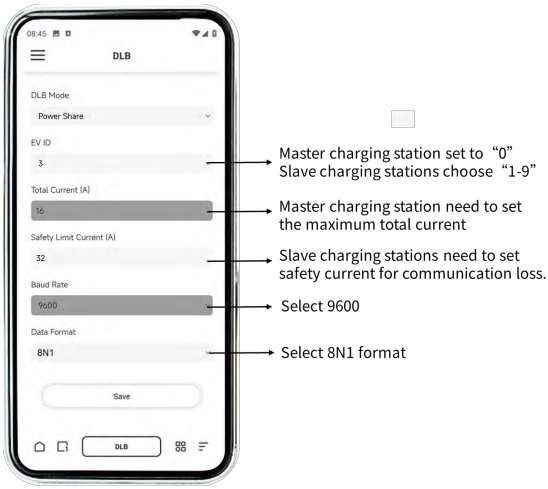

Fig. 9-7 Power share setting in the configuration page

WARRANTY AGREEMENT

1. The scope of warranty refers to the product itself.
2. The warranty period is 12 months. During the warranty period, the company will repair the product free of charge in case of failure or damage (determined by the company's technical personnel) under normal use.
3. The starting time of the warranty period is the date of product manufacture.
4. Even in the warranty period, a certain maintenance fee will be charged in case of the following situations.
   ① Equipment failure caused by not following the user's manual.
   ② Equipment damage caused by fire, flood, abnormal voltage, etc.
   ③ Equipment damage caused by using the product for abnormal functions.
   ④ Equipment damage caused by foreign matter entering.
   ⑤ Equipment damage caused by other human external factors.
5. The service fee shall be calculated according to the actual cost. If there is another contract, the contract shall prevail.
6. Please be sure to keep this card and show it to the maintenance personnel during the warranty period.
7. If you have any questions, please contact the agent or our company directly.

After sales service center

For Both FCC & IC application:

This device complies with Part 15 of the FCC Rules / Industry Canada licence-exempt RSS standard(s). Operation is subject to the following two conditions: (1) this device may not cause harmful interference, and (2) this device must accept any interference received, including interference that may cause undesired operation.

Le présent appareil est conforme aux CNR d'Industrie Canada applicables aux appareils radio exempts de licence. L'exploitation est autorisée aux deux conditions suivantes: (1) l'appareil ne doit pas produire de brouillage, et (2) l'utilisateur de l'appareil doit accepter tout brouillage radioélectrique subi, même si le brouillage est susceptible d'en compromettre le fonctionnement.

Changes or modifications not expressly approved by the party responsible for compliance could void the user's authority to operate the equipment.

This equipment has been tested and found to comply with the limits for a Class B digital device, pursuant to part 15 of the FCC Rules. These limits are designed to provide reasonable protection against harmful interference in a residential installation. This equipment generates uses and can radiate radio frequency energy and, if not installed and used in accordance with the instructions, may cause harmful interference to radio communications. However, there is no guarantee that interference will not occur in a particular installation. If this equipment does cause harmful interference to radio or television reception, which can be determined by turning the equipment off and on, the user is encouraged to try to correct the interference by one or more of the following measures:
—Reorient or relocate the receiving antenna.
—Increase the separation between the equipment and receiver.
—Connect the equipment into an outlet on a circuit different from that to which the receiver is connected.
—Consult the dealer or an experienced radio/TV technician for help.

MPE Requirements
To satisfy FCC / IC RF exposure requirements, a separation distance of 20 cm or more should be maintained between the antenna of this device and persons during device operation.
To ensure compliance, operations at closer than this distance is not recommended.

Les antennes installées doivent être situées de facon à ce que la population ne puisse y être exposée à une distance de moin de 20 cm. Installer les antennes de facon à ce que le personnel ne puisse approcher à 20 cm ou moins de la position centrale de l' antenne.
La FCC des éltats-unis stipule que cet appareil doit être en tout temps éloigné d' au moins 20 cm des personnes pendant son functionnement.

We provide customers
with all-round technical support.

Any change or upgrade without prior notice!