M3P U-series

Level 2 AC EV Charger

User Manual

DOC ID: UM211401.A0

IMPORTANT SAFETY INSTRUCTIONS

WARNING - When using electric products, basic precautions should always be followed, including the following. This manual contains important instructions for Models M3P132U and M3P140U that shall be followed during installation, operation and maintenance of the unit.

1. Read all the instructions before using this product.

2. This device should be supervised when used around children.

3. Do not put fingers into the electric vehicle connector.

4. Do not use this product if the flexible power cord or EV cable is frayed, has broken insulation, or any other signs of damage.

5. Do not use this product if the enclosure or the EV connector is broken, cracked, open, or shows any other indication of damage.

6. Indicate the ambient temperature rating, -30°C to 55°C.

7. "CAUTION" and the following or equivalent: "To reduce the risk of fire, connect only to a circuit provided with @ amperes maximum branch circuit overcurrent protection in accordance with the National Electrical Code, ANSI/NFPA 70, and the Canadian Electrical Code, Part I, C22.1."

Note (@)

Model	Rated
M3P140U	240V Level 2 AC, 60Hz
M3P132U	

CONSIGNES DE SÉCURITÉ IMPORTANTES

AVERTISSEMENT - Lors de l'utilisation de produits électriques, des précautions de base doivent toujours être suivies, y compris les suivantes. Ce manuel contient des instructions importantes pour les modèles M3P132U et M3P140U qui doivent être suivies pendant l'installation, l'utilisation et la maintenance de l'unité.

1. Lisez toutes les instructions avant d'utiliser ce produit.

2. Cet appareil doit être surveillé lorsqu'il est utilisé à proximité d'enfants.

3. Ne mettez pas les doigts dans le connecteur du véhicule électrique.

4. N'utilisez pas ce produit si le cordon d'alimentation flexible ou le câble EV est effiloché, a une isolation cassée ou tout autre signe de dommage.

5. N'utilisez pas ce produit si le boîtier ou le connecteur EV est cassé, fissuré, ouvert ou montre toute autre indication de dommage.

6. Indiquez la température ambiante, de -30 ° C à 55 ° C.

7. "MISE EN GARDE" et ce qui suit ou équivalent: «Pour réduire le risque d'incendie, connectez uniquement à un circuit équipé d'une protection maximale contre les surintensités de circuit de dérivation de @ ampères conformément au Code national de l'électricité, ANSI / NFPA 70 et au Code canadien de l'électricité, Partie I, C22.1. "

Noter (@)

Modèle	Puissance nominale
M3P140U	240V classe 2 AC, 60HZ
M3P132U	

CONTENTS

1. ABBREVIATIONS 2

2. SAFETY NOTES 3

2.1. Safety signs 3

2.2. Installation 4

2.3. Maintenance 4

2.4. Operating 5

3. STANDARDS 6

3.1. Reference standard 6

3.2. Charging mode 6

3.3. Charging connection 6

3.4. Charging connector 7

4. PRODUCT INFORMATION 8

4.1. General 8

4.2. Block diagram 8

4.3. Technical specifications 9

4.4. Nameplate 10

5. INSTALLATION INSTRUCTIONS 12

5.1. Transport or movement 12

5.2. Unpacking 12

5.3. Installation preparation 14

5.4. Installation Steps 15

6. OPERATION 18

6.1. Power on 18

6.2. Human-machine interface 18

6.3. Configure WiFi network 19

6.4. Start charging 21

6.5. Normally stop charging 21

6.6. Abnormally stop charging 22

7. FAULT HANDLING AND MAINTENANCE 23

7.1. Fault Handling 23

7.2. Maintenance 24

WARRANTY AGREEMENT 25

1. ABBREVIATIONS

S/N	Abbreviations	Description
1	IEC	International Electrotechnical Commission
2	EV	Electrical Vehicle, this can be BEV (battery EV) or PHEV (plug-in hybrid EV)
3	EVSE	Electric Vehicle Supply Equipment **[IEC61851-1]**
4	kW	Kilo Watt (unit of Power)
5	A	Ampere (unit of Current)
6	V	Volt (unit of Voltage)
7	Hz	Hertz (unit of Frequency)
8	LED	Light-emitting Diode
9	RFID	Radio Frequency Identification
10	CMS	Central Management System, *Manages EVSE and has the information for authorizing users for using its EVSE.*
11	OCPP	Open Charge Point Protocol *A standard open protocol for communication between EVSE and a Central System and is designed to accommodate any type of charging technique.* (www.openchargealliance.org)
12	IP	Ingress Protection
13	PE	Protective Earthing
14	HMI	Human-Machine Interface
15	MCB	Miniature Circuit Breaker
16	MCCB	Moulded Case Circuit Breaker

2. SAFETY NOTES

2.1. Safety signs

The following warning signs, mandatory signs and information signs are used in the user manual, on and in the M3P EV Charger:

Les panneaux d'avertissement, panneaux obligatoires et panneaux d'information suivants sont utilisés dans le manuel d'utilisation, sur et dans la station de charge M3P EV:

2.1.1. Warning Signs

CAUTION: Warning of electrical hazards.
This sign is intended to alert the user that severe personal injury or substantial property damage can result if the device is not operated as requested.
MISE EN GARDE: Avertissement de risques électriques.
Ce signe est destiné à alerter l'utilisateur que des blessures graves ou des dommages matériels importants peuvent survenir si l'appareil n'est pas utilisé comme demandé.

ATTENTION: Warning of a danger spot or dangerous situation.
This sign is intended to alert the user that minor personal injury or material damage can result, if the device is not operated as requested.
ATTENTION: Avertissement d'un point de danger ou d'une situation dangereuse.
Ce signe est destiné à alerter l'utilisateur que des blessures légères ou des dommages matériels peuvent survenir si l'appareil n'est pas utilisé comme demandé.

2.1.2. Prohibiting signs

No access for unauthorized persons

Pas d'accès pour les personnes non autorisées

2.1.3. Mandatory signs

Use protective footwear

Utilisez des chaussures de protection

Must wear a safety helmet

Doit porter un casque de sécurité

2.2. Installation

Safety protection must be done when installing the EV Charger.
Une protection de sécurité doit être effectuée lors de l'installation de la station de charge EV.

Installation must be carried out by personnel with professional qualification, otherwise there is a risk of electric shock.
L'installation doit être effectuée par du personnel qualifié, faute de quoi il y a un risque d'électrocution.

It shall be installed in the place without violent vibration and impact, and placed vertically to facilitate ventilation.
Il doit être installé à l'endroit sans vibrations et chocs violents, et placé verticalement pour faciliter la ventilation.

It shall be installed on noncombustible materials, or there is a risk of fire.
Il doit être installé sur des matériaux incombustibles, ou il existe un risque d'incendie.

Do not drop any foreign objects, especially metal objects, into the inside of the Charger or there is a risk of fire.
Aucun objet étranger, en particulier un objet métallique, ne doit être placé dans le chargeur sans risque d 'incendie.

The lead nose of the Charger must be securely attached or there is a risk of damaging the equipment.
Les fils du chargeur doivent être solidement connectés, faute de quoi le matériel risque d'être endommagé.

2.3. Maintenance

Personnel must always use protective footwear when maintenance work.
Le personnel doit toujours porter des chaussures de protection lors des travaux de maintenance.

It is recommended that routine safety inspection visits to Charger be conducted at least once a week.
Il est recommandé que le chargeur fasse l'objet d'un contrôle de sécurité au moins une fois par semaine.

Do not put inflammable, explosive or combustible materials, chemicals, combustible steam and other dangerous goods near the Charger, otherwise there is a risk of fire.
Il est interdit de placer des substances dangereuses telles que des matières inflammables, explosives ou inflammables, des produits chimiques, des vapeurs inflammables à proximité des chargeurs, faute de quoi il y a un risque d'incendie.

Keep the charging adapter clean and dry and wipe with a clean, dry cloth if soiled. Do not touch the Charger with your hand when charged.
Maintenir l 'adaptateur de charge propre et sec, en cas de saleté, et l' essuyer avec une toile sèche propre.Ne touche pas le chargeur avec la main.

2.4. Operating

Strictly forbidden for minors or persons of restricted capacity to approach the Charger to avoid injury.
Il est strictement interdit aux mineurs ou aux personnes dont la capacité de mouvement est limitée d'avoir accès au chargeur pour éviter les blessures.

Forced charging is strictly forbidden when the electric vehicle or Charger fails.
La charge forcée est interdite en cas de panne du véhicule électrique ou du chargeur.

Electric vehicle can only be charged with the engine off and stationary. Do not charge in rainy and thunderous weather.
Le véhicule électrique ne peut être rechargé que si le moteur est éteint et statique.Il ne faut pas recharger les jours de pluie et les orages.

It is strictly prohibited to use the Charger when the charging adapter or charging cables are defective, cracked, worn, broken or the charging cables is exposed. If you find any, please contact the supplier in time.
L'utilisation de chargeur est strictement interdite lorsque l'adaptateur de charge ou le câble de charge présente des défauts, des défauts, des défauts, de l'usure, de la rupture ou de la nudité.En cas de découverte, veuillez contacter le fournisseur en temps voulu.

3. STANDARDS

3.1. Reference standard

The M3P U-series AC EV Charger is designed according to IEC standards. The standards of this series of products include:

- **IEC 61851-1:2017**, *Electric vehicle conductive charging system - Part 1: General requirements*
- **IEC 62196-2:2016**, *Plugs, socket-outlets, vehicle connectors and vehicle inlets – Conductive charging of electric vehicles – Part 2: Dimensional compatibility and interchangeability requirements for a.c. pin and contact-tube accessories*
- **SAE J1772,** *SAE Electric Vehicle and Plug in Hybrid Electric Vehicle Conductive Charge Coupler*

3.2. Charging mode

- According to **IEC 61851-1(3.1.9; 6.2.3)**

> *Mode 3 is a method for the connection of an EV to an AC EV supply equipment permanently connected to an AC supply network, with a control pilot function that extends from the AC EV supply equipment to the EV. EV supply equipment intended for Mode 3 charging shall provide a protective earthing conductor to the EV socket-outlet and / or to the vehicle connector.*

- The M3P U-series product is an EVSE that conforms to the Mode 3.

3.3. Charging connection

- According to **IEC 61851-1(3.1.12),** the M3P U-series product is an EVSE that conforms to the CASE C connection (shown as Fig. 3-1).

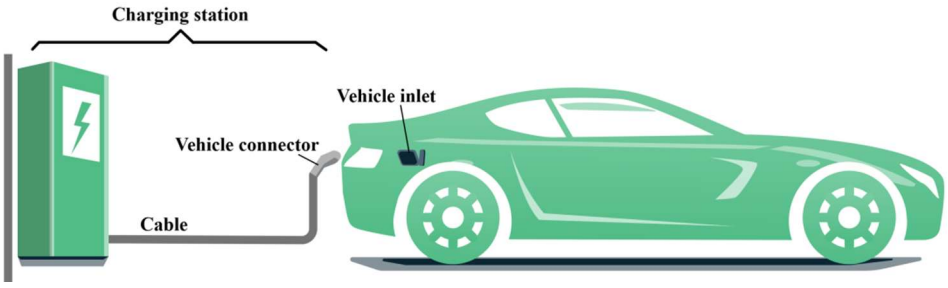

Fig. 3-1 Schematic diagram of CASE C connection

3.4. Charging connector

- The charging connector of M3P U-series products meet **IEC 62196-2**, type 1 (Schematic diagram shown as Fig. 3-2).
- The charging object of M3P U-series products are the electric vehicle with type 1 charging socket (Vehicle inlet) described in **IEC 62196-2**.

(a) type 1 socket

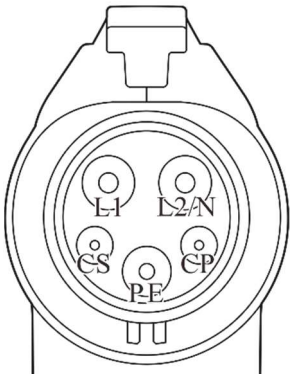

(b) type 1 plug

Fig. 3-2 Schematic diagram of Type 1 charging socket and plug

4. PRODUCT INFORMATION

4.1. General

Welcome to use the M3P U-series AC EV Charger produced by our company. The Shape & Dimensions of M3P U-series AC EV Charger shown as Fig. 4-1.

- ✓ M3P U-series AC EV Charger provides a friendly HMI, with the corresponding control, measuring and communication functions, belongs to the special AC power supply device for EV.
- ✓ It is widely used in all kinds of household electric vehicle charging, as well as various Chargers, parking lots, community garages and public electric vehicle charging places.

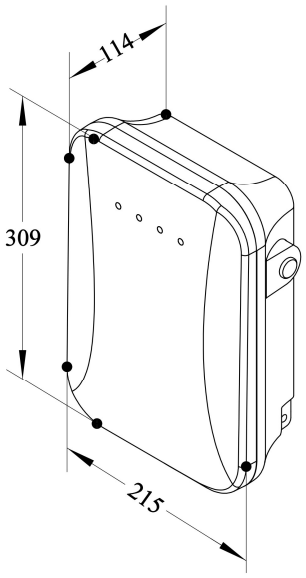

Fig. 4-1 The Shape & Dimensions of M3P

4.2. Block diagram

The block diagram of M3P U-series product is shown as Fig. 4-2.

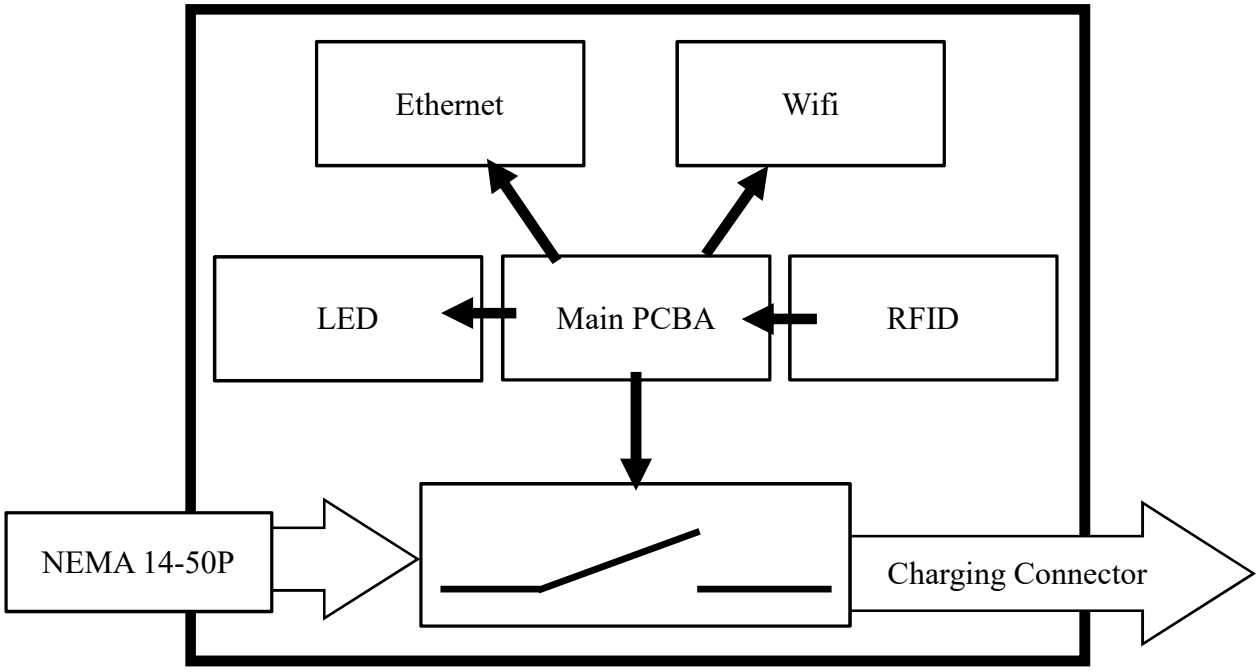

Fig. 4-2 Block diagram of M3P AC EV Charger

4.3. Technical specifications

4.3.1. Electrical parameters

1	Input Voltage	Level 2, 240VAC
2	Rated frequency	50/60 Hz
3	Branch breaker	It is recommended that a charger should be equipped with dedicated MCB circuit for power supply
4	Input circuit terminal	L1/ L2 / GND

4.3.2. Input plug & cable

Input plug & cable	Plug: NEMA 14-50P; Cable: 4×8 AWG, 300mm, copper. 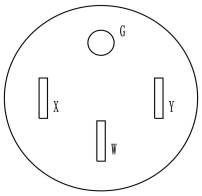 X: L1; Y: L2; W: No connect terminal; G: Ground.

4.3.3. Functional description

1	Charging mode	Mode 3
2	Charging control	Local: “Plug-and-charge” or “swipe card-controlled”; Remote: smart phone APP control (Operators build own APP).
3	Indicator lights	4 LED lights (indicate 4 status include power, connect, charging and fault)
4	Communication interface	Ethernet (RJ-45 interface), WiFi (2.4GHz)
5	Communication protocol	OCPP 1.6
6	Safety protection	Surge protection, over temperature, over/under voltage, over current, ground protection

4.3.4. Mechanical parameters

1	Mounting	Wall-mounted
2	Charging connector	SAE J1772 (or IEC 62196-2, Type 1)
3	Charging cable length	5m
4	Dimension (H×W×D)	309mm × 215mm × 114mm (as shown in Fig. 3-1)

5	Weight	≤ 6kg
6	Color	White and Gray
7	Material	PC
8	Enclosure rated	NEMA Type 4

4.3.5. Ambient conditions

1	Altitude	≤ 2000m
2	Storage temperature	-40 ~ 75℃
3	Operating temperature	-30 ~ 55℃
4	Relative humidity	≤ 95%RH, No water droplet condensation
5	Vibration	＜ 0.5G, No acute vibration and impaction
6	Installation location	Indoor or outdoor, good ventilation, no flammable, explosive gases

4.4. Nameplate

On the wallbox shell, there is a nameplate identifying the model and specification of the Charger, the content is shown as Fig. 4-3.

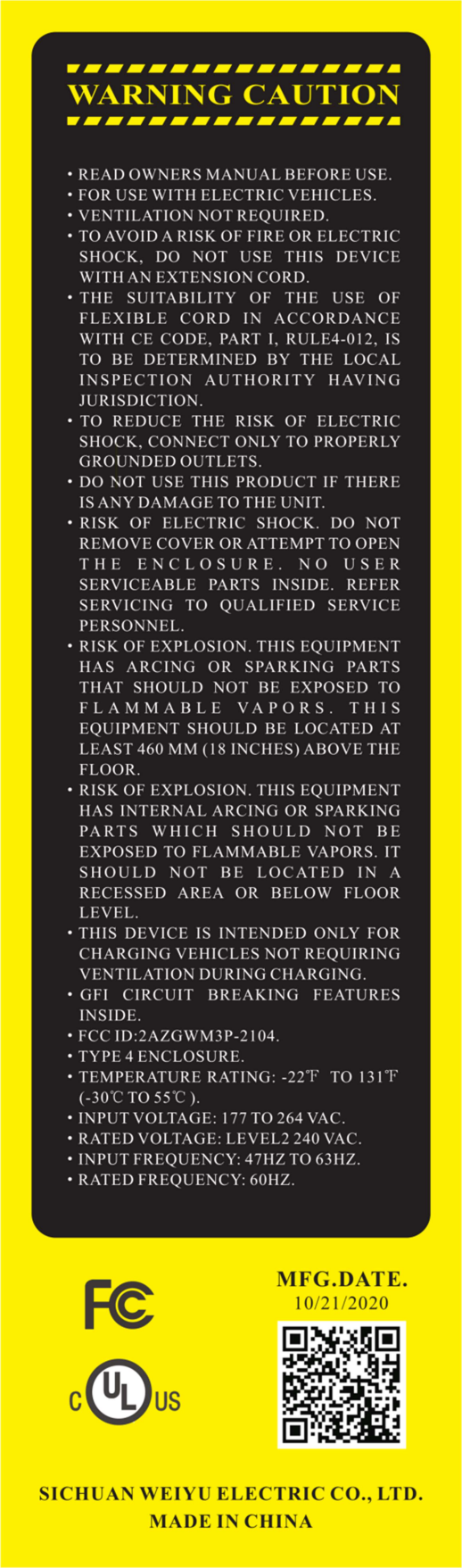

Fig. 4-3 Nameplate of Charger

5. INSTALLATION INSTRUCTIONS

5.1. Transport or movement

When transporting or moving, please pay attention to the following points to ensure product safety:

a) This product is electrical equipment. It should be handled with care to avoid violent vibration and impact.

b) The front panel of the product is a glass panel, which cannot be used as a stressed part for handling.

c) The back cover of the product is a sheet metal part, which should be well protected to avoid impact.

d) The Charger shall not be transported by dragging the charging connector and its charging cable.

5.2. Unpacking

5.2.1. Packing list

In the package, there is a packing list, which includes:

- 1 Charger (M3P wallbox)
- 1 Set of wall-mounting accessories (including A+B+C+D as Fig. 5-1 shown)
- 2 RFID cards
- 1 Empty connector socket
- 1 User manual
- 1 Quality certificate

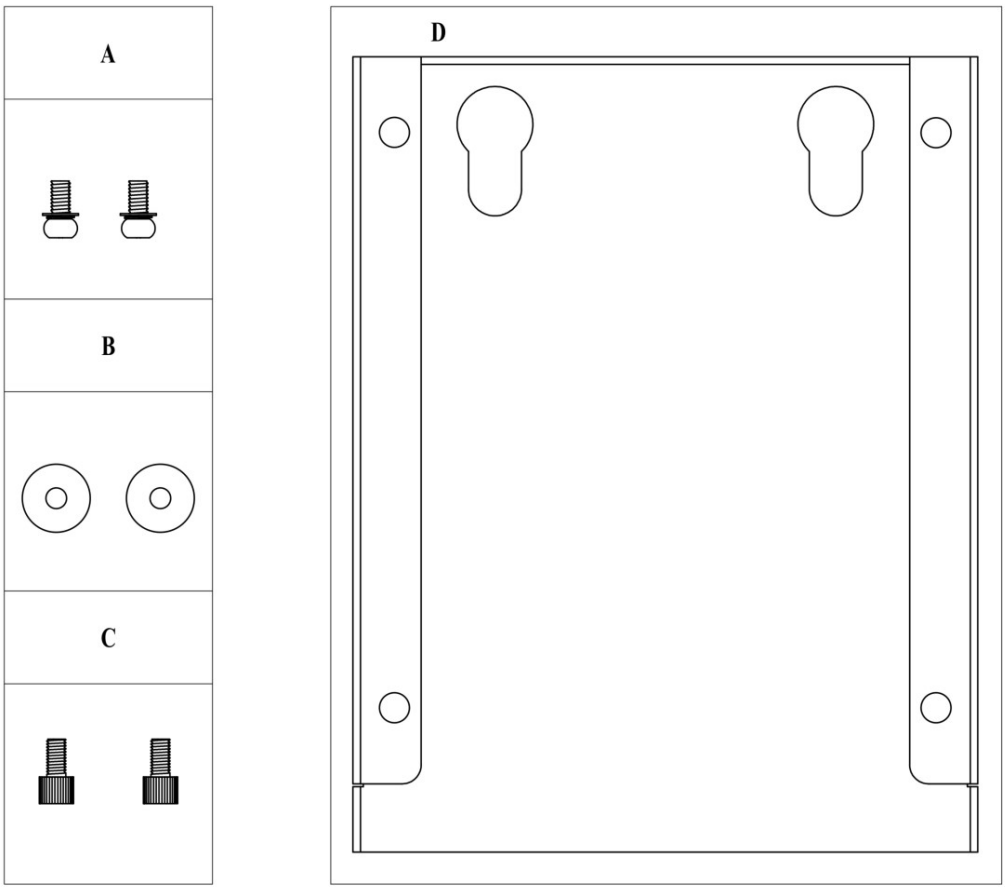

Fig. 5-1 Wall-mounting accessories

5.2.2. Inspection & confirm

When unpacking, please carefully confirm the following points:

a) Whether the accessories are missing according to the packing list.

b) Whether there is any damage during transportation. If any damage or missing parts are found, please do not start the machine and inform the supplier.

c) Whether the model and specification of the machine's nameplate are consistent with the order requirements.

Note:

Please keep the packing box and packing materials 1 month for future handling.

If any omission or inconsistency is found, please contact the supplier as soon as possible.

5.3. Installation preparation

5.3.1. Safety notes for installation

*Refer to **2.3** for more safety notes.*

Installation and wiring should be done by personnel with professional qualification, otherwise, hazardous electric shock may result.

Make sure input power supply is entirely disconnected before wiring; otherwise, hazardous electric shock may result.

Operator must always notice safe protection such as wear protective footwear, wear goggles, otherwise it may be personal injury.

5.3.2. Tools for installation

Prepare the following tools at least before installing the M3P U-series AC EV Charger.

Sr No.	Tools' Name	Schematic Picture	Main Uses
1	Multimeter	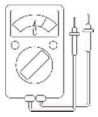	Check the electrical connection and measure the voltage
2	Electric Impact drill	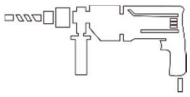	Drill fixing holes in the wall
3	Wrench		Fastening bolt
4	Diagonal pliers	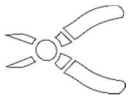	Cut the cable
5	Wire stripper	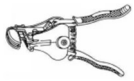	Peeling cables
6	Crimping pliers	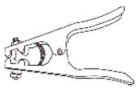	Pressed cable terminal
7	Cross screwdriver		Fastening screw

5.3.3. Ambient

a) Refer to **2.2** for more safety notes.

b) Refer to **4.4.4** for more ambient conditions.

c) It is suggested that the Charger should be installed in a place with good ventilation, no direct sunlight and shelter from wind and rain.

d) In order to ensure good ventilation condition, you should mount the Charger vertically and leave enough space.

e) If you purchase products with floor mounted accessories, the installation effect is similar to that of wall mounted product.

5.4. Installation Steps

5.4.1. Step 1: Install the attachment

a) Mounted the M3P accessories-D on the wall is shown in Fig. 5-2. As the figure, drill 4 holes of 10mm diameter and 50mm depth at the appropriate height, spaced 143mm×152mm apart, and secure the accessories-D to the wall with expansion screws.

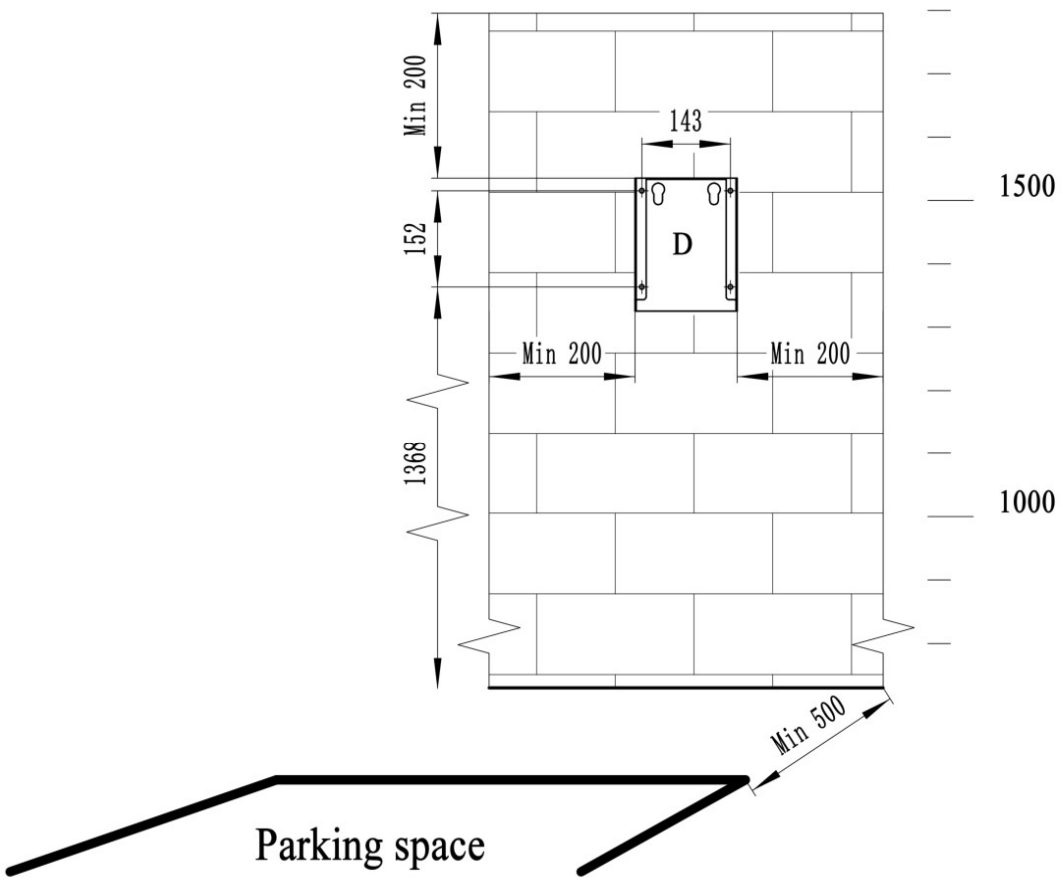

Fig. 5-2 M3P accessories-D mounted on the wall

5.4.2. Step 2: Hang the charger on the accessory-D

Secure mounting accessories(A+B) to the charger; Follow the arrow, and hang the charger on accessories-D.

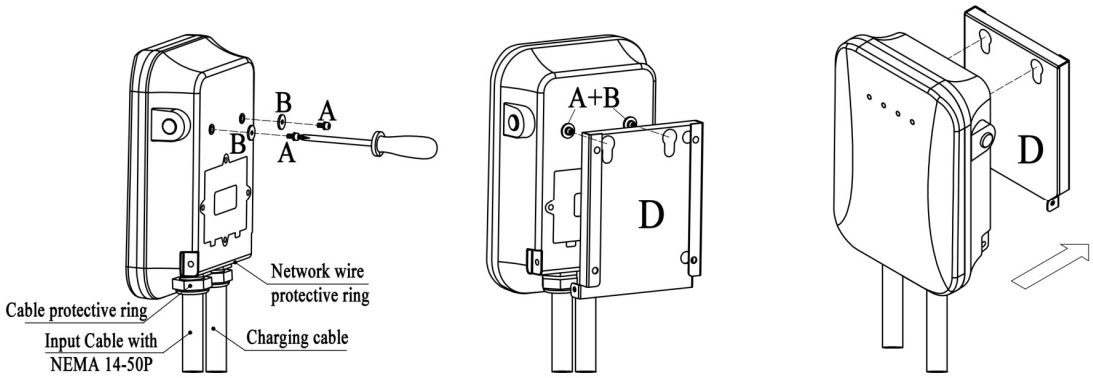

Fig. 5-3 Hang the charger on the accessories-D

5.4.3. Step 3: Wiring network wire

If the CMS is to be connected through the network cable, put the network wire through the network wire protective ring, then crimp the RJ-45 head, and then insert it into the network cable interface.

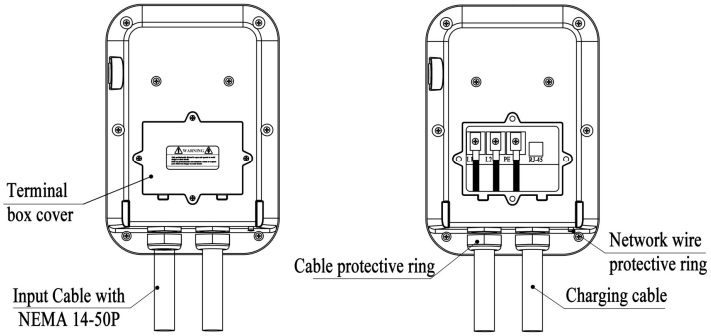

Fig. 5-4 Wiring network wire

The charger is equipped with a NEMA 14-50 plug that meets the NEMA standard. The length of the plug cable is 300mm. The user should install a NEMA 14-50 receptacle in a suitable position of the charger. Insert the plug into the socket to complete the wiring.

Note:

- Please select the cable diameter of the receptacle according to the rated current of the charger.
- The power supply of the charger should be equipped with a dedicated MCB.

In addition, if you need to replace the NEMA 14-50 plug cable, please follow the steps below:

a) Remove the of terminal box cover;

b) Pass the input cable through the cable protective ring, connect the power cable to the input terminals; Reset the terminal box cover.

It is recommended to use flame retardant rubber copper core cable as the input cable, pass the cable through the input interface of the Charger, then fix the Live wire, Neutral wire and GND wire to the corresponding terminals, and finally fix the cable.

5.4.4. Step 4：Fixed the charger

Tighten the set screws on the left and right ends to fixed the charger.

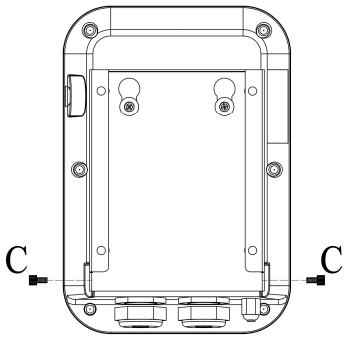

Fig. 5-5 Fixed the wallbox

5.4.5. Empty socket

M3P U-series AC EV Charger config a type 1 charging connector.

When the Charger is in standby state, please plug the charging connector in the empty connector socket in order to protect the charging connector.

Please use expansion screws to fix this empty socket at a suitable position beside the Charger.

Fig. 5-6 Empty socket

6. OPERATION

6.1. Power on

After the Charger is installed and confirmed to be correct, the MCB at the input side is switched on, and ⏻ indicator light is on, and the Charger enters the standby state.

6.2. Human-machine interface

6.2.1. HMI information

As shown in Fig. 6-1, the M3P U-series product is configured with multiple human-machine interfaces. The functional parts of the Charger panel are described as follows:

Fig. 6-1 Schematic diagram of EV Charger

①	**4 LED lights:** Indicate 4 status, include power, charging, fault, and network
②	**Swipe card area:** Swipe the IC card to charging
③	**WiFi configuration button:** Configure WiFi network name and password

6.2.2. LED indicators

The LED indicators on the panel are used to indicate the status of the Charger and the various combinations of indicators are described as below.

No.	Icon	Indicator color	Indicator status	Connotation
1	⏻	GREEN	ON	Standby status
			Twinkle	Ground fault status
2	⚡	RED	ON	connected to the EV
			BLN control	Charging status

3	!	YELLOW	Twinkle	Fault status. Get the fault code by the cycle flashing of the fault indicator.
4		BLUE	OFF	Unconnected to the network
			ON	Connected to the network
			1Hz twinkle	Normal connection with CMS
			5Hz twinkle	Configure WiFi network status

6.2.3. RFID reader

In general, M3P is equipped with RFID card reader as standard, and the charging process can be started and stopped by using the RFID card (shown as Fig. 6-2) configured with the host. The special customized card swiping function is not separately described here.

Fig. 6-2 RFID card

6.3. Configure WiFi network

a) Prepare a WiFi router operating at 2.4GHz and an Android or iPhone smart phone. Make sure the Charger and smart phone are in the WiFi coverage area.

b) Turn on the WiFi router to ensure that the router can connect to the Internet normally.

c) Turn on the WiFi of the smart phone, connect the smart phone to the router through WiFi and ensure that the phone can access the Internet through the router.

d) Install the "esptouch" APP on your smart phone.

Note:

- ✓ ***esptouch for iOS download link:*** https://apps.apple.com/cn/app/espressif-esptouch/id1071176700;
- ✓ ***esptouch for Android download link:*** https://github.com/EspressifApp/EsptouchForAndroid/releases/download/v1.1.1/esptouch.apk

(for iOS) (for Android)

e) Open the esptouch APP, enter the password for the WiFi network name (shown as Fig. 6-3), and keep the phone in the esptouch APP, do not exit.

Fig. 6-3 APP interface

f) Press and hold the WiFi configuration button until the indicator light flashes at 5Hz frequency, and the Charger enters the WiFi network configuration state. Click the "CONFIRM" button on the phone.

g) Charger automatically configures WiFi network. When indicator light is always on, the Charger has completed the WiFi network configure and has been connected to the WiFi router.

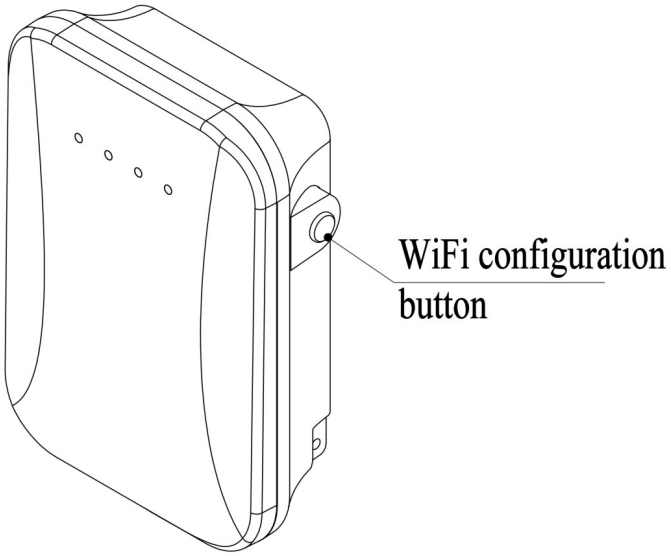

Fig. 6-4 WiFi configuration button

6.4. Start charging

a) Park the electric car into place, turn off the engine, and put the car under braking.

b) Pick off the charging connector and is shown as Fig. 6-5.

c) Plug the charging connector into the AC charging socket of the electric vehicle and the ⚡ indicator light of the Charger will be light on.

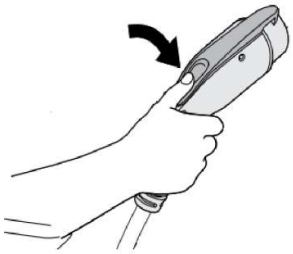

Fig.6-5 Pick off the charging connector

d) For “plug-and-charge” Charger, it will automatically enter the charging process; for “swipe card-controlled” Charger, it needs to swipe card to start; for APP-controlled Charger, it needs to operate mobile phone to start.

e) When the ⚡ light begins to BLN control, the Charger will enter the charging state.

6.5. Normally stop charging

a) There are two normal stoppages for “plug-and-charge” Charger: first, automatic stoppage with full charge, and second, manual stoppage.

b) Operation of manual stoppage:

press the unlock button of the remote key of the electric vehicle, the vehicle will stop charging (requires the support of the electric car), if the charging is not stopped, pull connector out the vehicle, the ⚡ indicator will go off, and the charging will stop automatically.

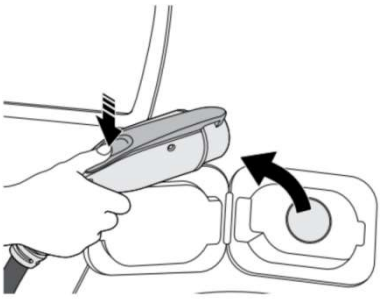

Fig. 6-6 pull connector out the vehicle

c) Pull the connector out of the vehicle to complete charging process. If you can't pull out the connector, usually because the vehicle is locked, press the unlock button of the vehicle key and the connector can be pulled out.

Note:

- ✓ ***For "swipe card-controlled" charger, please start and stop charging by swiping your card.***
- ✓ ***For "APP-controlled" charger please start and stop charging through your APP.***

6.6. Abnormally stop charging

a) Forced fault stop: A fault stop initiated by the onboard charger of vehicle.

b) Automatic fault stop：A fault stop initiated by the Charger.

7. FAULT HANDLING AND MAINTENANCE

7.1. Fault Handling

The Charger is automatically protected in the event of the fault. The fault information and handling methods are as follows.

! indicator information	Fault category	Handling Method
Flash slowly once and fast 1 times	CP voltage anomaly	Fault code 11: Check that the connector is properly connected to the electric vehicle, pull and plug the connector and try charging again.
Flash slowly once and fast 3 times	Under voltage fault	Fault code 13: Check that the input cable is reliably connected, that the parent grid is properly connected, and that the grid voltage is abnormal.
Flash slowly once and fast 4 times	Input over voltage	Fault code 14: Check whether the input cable is connected correctly; Whether the grid voltage is abnormal.
Flash slowly once and fast 5 times	Over-temperature protection	Fault code 15: Check whether the Charger is covered or installed in a high temperature environment.
Flash slowly once and fast 6 times	Metering fault	Fault code 16: Power off and restart the device.
Flash slowly once and fast 7 times	Leakage protection	Fault code 17: Check whether the charging connector and its cable are damaged or wet. Recover after pulling out the connector.
Flash Slowly once and fast 8 times	Output shortage	Fault code 18: Check whether the charging connector and its cables are damaged or wet.
Flash slowly once and fast 9 times	Output over current	Fault code 19: Check whether the charging connector is correctly connected to the car, and check whether the on-board charger is normal

! indicator information	Fault category	Handling Method
Flash slowly twice and fast 1 times	Electric vehicle response timeout	Fault code 21: Make sure that the charging connector is properly connected to the car, pull out and retry, or the car is full charge.
Flash slowly twice and fast 2 times	No diode at EV end	Fault code 22: This EV does not meet the IEC standards and cannot be charged
Flash slowly twice and fast 3 times	Relay sticking	Fault code 23: The device is damaged and needs to be returned to the factory for repair
Flash slowly twice and fast 4 times	Leakage detection circuit failure	Fault code 24: The device is damaged and needs to be returned to the factory for repair
Flash slowly twice and fast 5 times	Ground fault	Fault code 25: Charger is not grounded, input power cable needs to be checked

7.2. Maintenance

To ensure the long-term stable operation of the equipment, please maintain the equipment regularly (usually every month) according to the operating environment.

a) The equipment is maintained by professionals.

b) Check whether the equipment is well grounded and safe.

c) Check whether there are potential safety hazards around the charging pile, such as whether there are high temperature, corrosion or inflammable and explosive articles close to the Charger.

d) Check whether the join point of the input terminal is in good contact and whether there is any abnormality. Check whether other terminal points are loose.

WARRANTY AGREEMENT

1. The scope of warranty refers to the product itself.

2. The warranty period is 12 months. During the warranty period, the company will repair the product free of charge in case of failure or damage (determined by the company's technical personnel) under normal use.

3. The starting time of warranty period is the date of product manufacture.

4. Even in the warranty period, a certain maintenance fee will be charged in case of the following situations.

   ① Equipment failure caused by not following the user's manual.

   ② Equipment damage caused by fire, flood, abnormal voltage, etc.

   ③ Equipment damage caused by using the product for abnormal functions.

   ④ Equipment damage caused by foreign matter entering.

   ⑤ Equipment damage caused by other human external factors.

5. The service fee shall be calculated according to the actual cost. If there is another contract, the contract shall prevail.

6. Please be sure to keep this card and show it to the maintenance personnel during the warranty period.

7. If you have any questions, please contact the agent or our company directly.

After sales service center

Sichuan Weiyu Electric Co., Ltd

FCC Warning

Note: This equipment has been tested and found to comply with the limits for a Class B digital device, pursuant to part 15 of the FCC Rules. These limits are designed to provide reasonable protection against harmful interference in a residential installation. This equipment generates, uses and can radiate radio frequency energy and, if not installed and used in accordance with the instructions, may cause harmful interference to radio communications. However, there is no guarantee that interference will not occur in a particular installation. If this equipment does cause harmful interference to radio or television reception, which can be determined by turning the equipment off and on, the user is encouraged to try to correct the interference by one or more of the following measures:

—Reorient or relocate the receiving antenna.

—Increase the separation between the equipment and receiver.

—Connect the equipment into an outlet on a circuit different from that to which the receiver is connected.

—Consult the dealer or an experienced radio/TV technician for help.

FCC Caution

This device complies with part 15 of the FCC Rules. Operation is subject to the following two conditions: (1) This device may not cause harmful interference, and (2) this device must accept any interference received, including interference that may cause undesired operation.

The user manual or instruction manual for an intentional or unintentional radiator shall caution the user that changes or modifications not expressly approved by the party responsible for compliance could void the user's authority to operate the equipment. In cases where the manual is provided only in a form other than paper, such as on a computer disk or over the Internet, the information required by this section may be included in the manual in that alternative form, provided the user can reasonably be expected to have the capability to access information in that form.

RF Exposure Statement

This equipment must be installed and operated in accordance with provide instructions and the antenna used for this transmitter must be installed to provide a separation distance of at least 20 cm from all persons and must not be co-located or operation in conjunction with any other antenna or transmitter. End-users and installers must be provided with antenna installation instructions and transmitter operating conditions for satisfying RF exposure compliance.

Any change without prior notice!

Sichuan Weiyu Electric Co., Ltd

Address: No.1, Tumenjiang Road (C2# Building, Tianyu Science & Technology Park), Deyang, Sichuan, P. R. China

P.C.: 618000

Tel: +86-0838-6926969

Web: www.wyevcharger.com www.weeyuevse.com

E-mail：support@ wyevcharger.com support@weeyuevse.com