S2019A-I-V1.0

802.11n 150Mbps 2.4G WiFi USB Module Specification

SHENZHEN BILIAN ELECTRONIC CO., LTD

Add: 10~11/F, Building 1A, Huaqiang idea park, Guangming district, Shenzhen. Guangdong, China

Web: www.b-link.net.cn

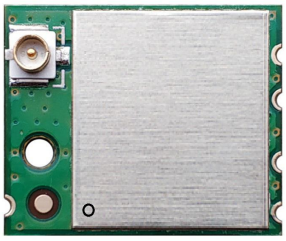

Module Name: S2019A-I-V1.0	
Module Type: 802.11n 150Mbps 2.4G USB Module	
Revision: V1.0	
Customer Approval:	
Company:	
Title:	
Signature:	Date:
BL-link Approval:	
Title:	
Signature:	Date:

Revision History

Revision	Summary	Release Date
0.1	Initial release	2020-01-06
1.0	Official version	2020-03-10

1. Introduction

The S2019A-I is a highly integrated Wi-Fi module supports 150 Mbps PHY rate. It fully complies with IEEE 802.11n standards, offering feature-rich wireless connectivity at high standards, and delivering reliable, cost-effective throughput from an extended distance. Optimized RF architecture and baseband algorithms provide superb performance and low power consumption. Intelligent MAC design deploys a high-efficient DMA engine and hardware data processing accelerators which offloads the host processor.

1.1 Features

- Operating Frequencies: 2.4~2.4835GHz
- Host Interface is USB2 .0
- Wireless data rate can reach up to 150Mbps
- Connect to external antenna through IPEX connector
- Power Supply: VDD33 3.3V±0.2V main power supply

1.2 Block Diagram

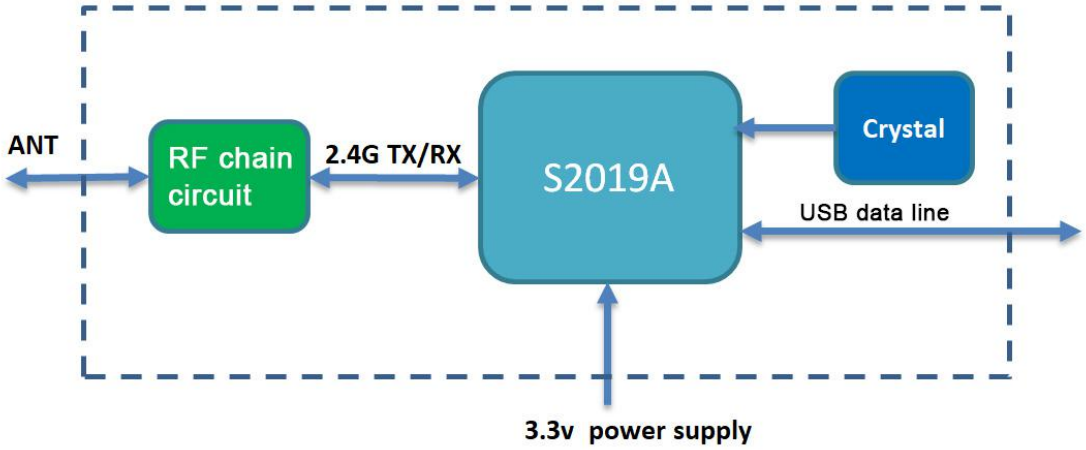

1.3 General Specifications

Module Name	S2019-I-V1.0
Chipset	S2019A
WiFi Standards	802.11n 1T1R, 2.4G, 150Mbps
Host Interface	USB2.0
Antenna	Connect to the external antenna through IPEX connector
Dimension	SMD 5Pins, 15.7*13*2.3mm (L*W*H), Tolerance: +/-0.15mm

Power Supply	DC 3.3V±0.2V @ 350mA (Max)
Operation Temperature	-20℃ to +70℃
Operation Humidity	10% to 95% RH (Non-Condensing)

2. Pin Assignments

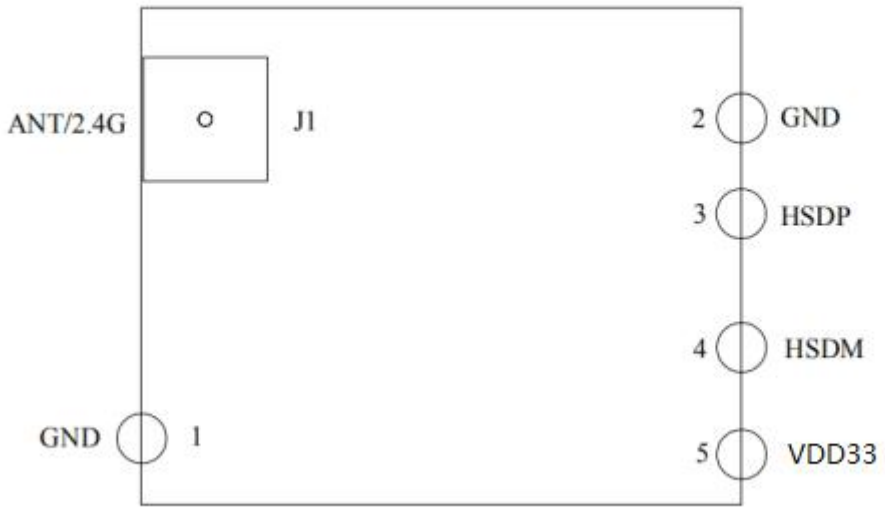

2.1 Pin Definition

No	Pin Name	Type	Description	Supply
1	GND	P	Ground connections	
2	GND	P	Ground connections	
3	HSDP	I/O	USB 2.0 differential line	
4	HSDM	I/O	USB 2.0 differential line	
5	VDD33	P	3.3V Main Power Supply	
	J1	RF	ANT/2.4G/IPEX connector	

P: Power, I: Input, O: Output, I/O: In/Output, RF: Analog RF Port

3. Electrical and Thermal Specifications

3.1 Recommended Operating Conditions

Parameters		Min	Typ	Max	Units
Ambient Operating Temperature		-20	25	70	℃
External Antenna Voltage Standing Wave Ratio		1	1.92	2.5	1
Supply Voltage	VDD33	3.1	3.3	3.5	V

3.2 Current Consumption

Conditions : VDD33=3.3V ; Ta:25℃			
Use Case	VBAT Current (average)		
	Typ	Max	Units
WiFi power consumption (Linux Driver/Throughput)	100	-	mA
2.4G DBPSK TX (RF-Test)	255	266	mA
2.4G DBPSK RX (RF-Test)	60	80	mA
2.4G CCK TX (RF-Test)	225	238	mA
2.4G CCK RX (RF-Test)	62	88	mA
2.4G BPSK TX (RF-Test)	255	264	mA
2.4G BPSK RX (RF-Test)	65	88	mA
2.4G 64QAM TX (RF-Test)	138	144	mA
2.4G 64QAM RX (RF-Test)	65	88	mA
2.4G BPSK HT20 TX (RF-Test)	222	262	mA
2.4G BPSK HT20 RX (RF-Test)	65	88	mA
2.4G 64QAM HT20 TX (RF-Test)	134	145	mA
2.4G 64QAM HT20 RX (RF-Test)	65	88	mA
2.4G BPSKHT40 TX (RF-Test)	198	253	mA

2.4G BPSKHT40RX (RF-Test)	65	88	mA
2.4G 64QAM HT40 TX (RF-Test)	134	145	mA
2.4G 64QAM HT40 RX (RF-Test)	65	88	mA

4. WiFi RF Specifications

4.1 2.4G WiFi RF Specification

Conditions : VDD33=3.3V ; Ta:25℃			
Features	**Description**		
WLAN Standard	IEEE 802.11n CSMA/CA		
Frequency Range	2.4~2.4835GHz (2.4GHz ISM Band)		
Channels	Ch1~Ch11 (For 20MHz Channels) / Ch3~Ch09 (For 40MHz Channels)		
Modulation	802.11 (DSSS): DBPSK, DQPSK, CCK; 802.11(OFDM): BPSK, QPSK, 16QAM, 64QAM; 802.11(OFDM): BPSK, QPSK, 16QAM, 64QAM;		
Date Rate	802.11(DSSS): 1, 2, 5.5, 11Mbps; 802.11(OFDM): 6, 9, 12, 18, 24, 36, 48, 54Mbps; 802.11(16QAM): MCS0~MCS7(1T1R_SISO) 6.5~72.2Mbps; 802.11 (64QAM): MCS0~MCS7(1T1R_SISO) 13.5~150Mbps;		
Frequency Tolerance	≦ ±25ppm		
2.4G Transmitter Specifications			
TX Rate	**TX Power**	**TX Power Tolerance**	**EVM**
802.11b@1~11Mbps	19dBm	±1.0dBm	≦-22dB
802.11g@6Mbps	19dBm	±1.0dBm	≦-22dB
802.11g@54Mbps	19dBm	±1.0dBm	≦-28dB
802.11n@HT20_MCS0	18dBm	±1.0dBm	≦-22dB
802.11n@HT20_MCS7	18dBm	±1.0dBm	≦-28dB
802.11n@HT40_MCS0	17dBm	±1.0dBm	≦-22dB
802.11n@HT40_MCS7	17dBm	±1.0dBm	≦-28dB
2.4G Receiver Specifications			
RX Rate	**Min Input Level (Typ)**	**Max Input Level (Typ)**	**PER**
802.11b@1Mbps	-94dBm	-10dBm	< 8%
802.11b@11Mbps	-86dBm	-10dBm	< 8%
802.11g@6Mbps	-88dBm	-20dBm	< 10%

802.11g@54Mbps	-74dBm	-20dBm	< 10%
802.11n@HT20_MCS0	-86dBm	-20dBm	< 10%
802.11n@HT20_MCS7	-73dBm	-20dBm	< 10%
802.11n@HT40_MCS0	-80dBm	-20dBm	< 10%
802.11n@HT40_MCS7	-70dBm	-20dBm	< 10%

5. Mechanical Specifications

5.1 Module Outline Drawing

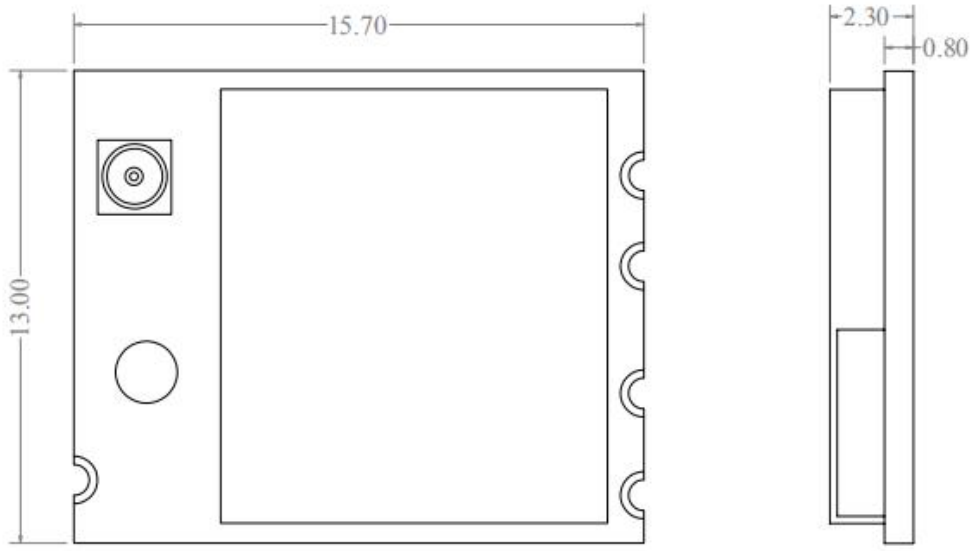

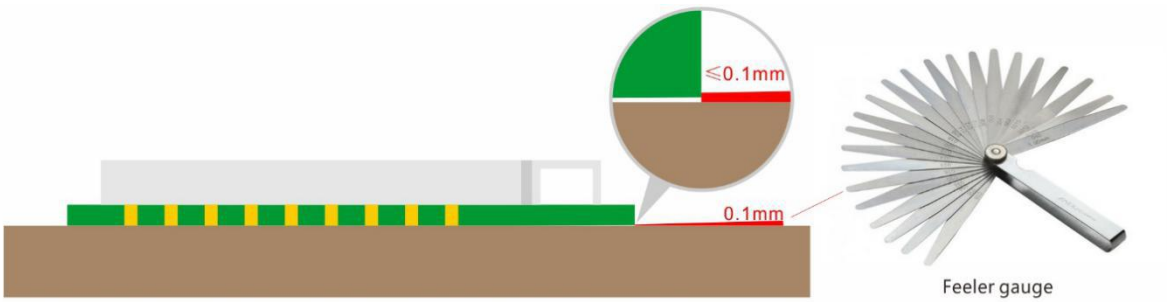

Module Bow and Twist：≤0.1mm

5.2 Mechanical Dimensions

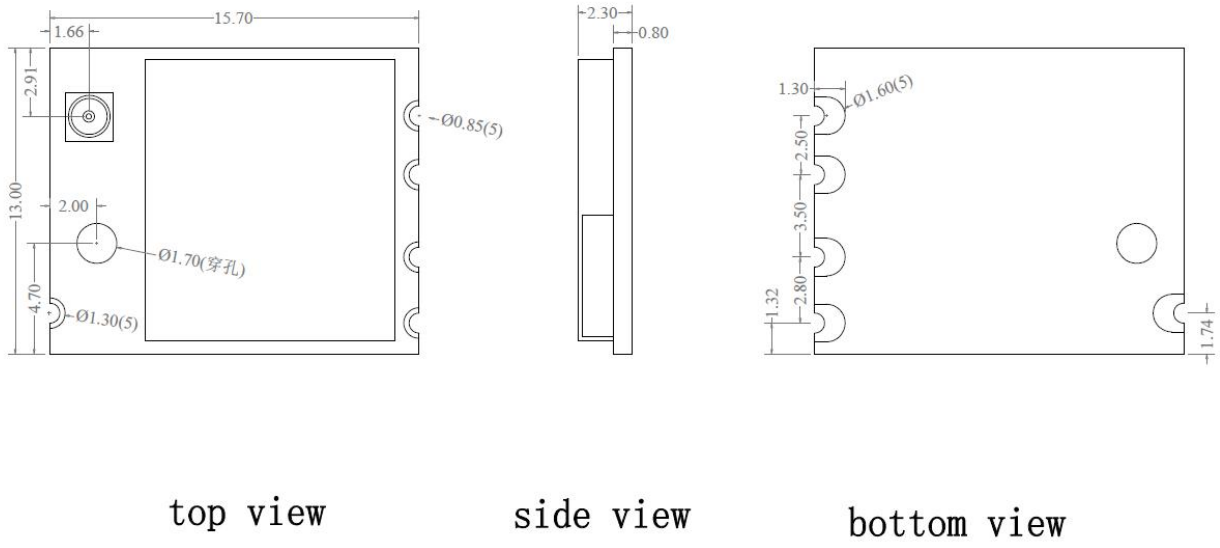

6. Application Information

6.1 Typical Application Circuit

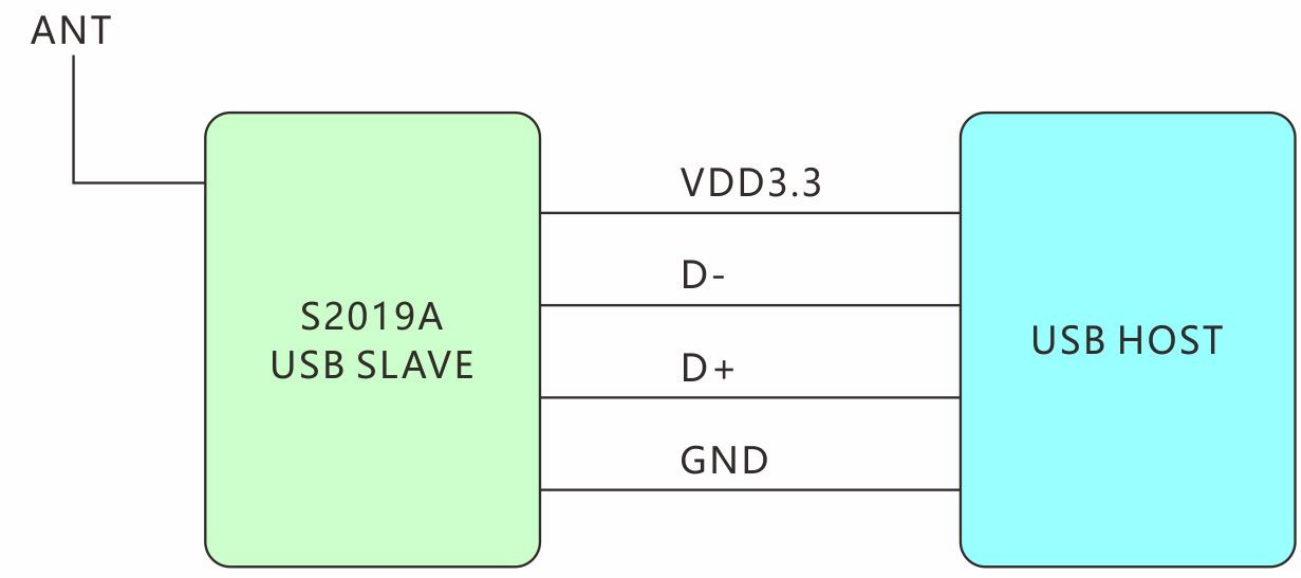

6.2 Recommend PCB Layout Footprint

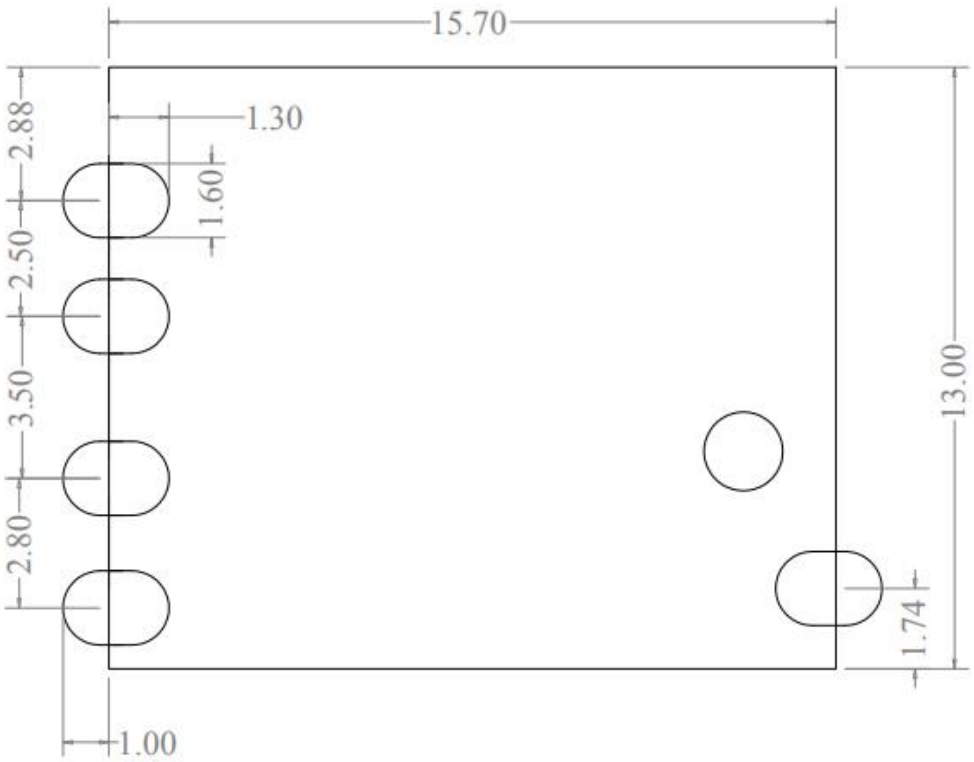

6.3 Reflow Soldering Standard Conditions

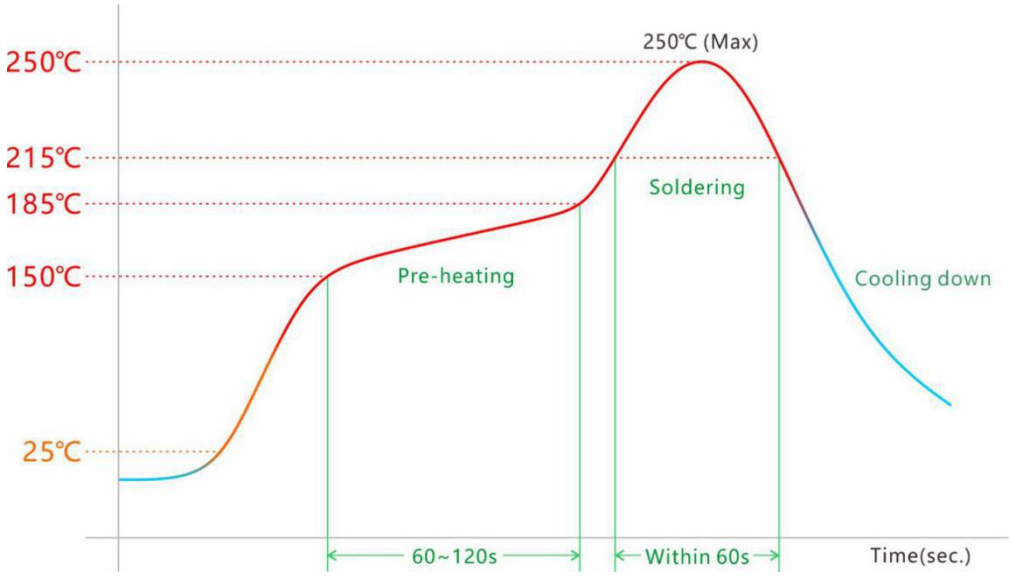

Please use the reflow within 2 times.
Set up the highest temperature within 250℃.

7. Key Components Of Module

No.	Parts	Specification	Manufacturer	Note
1	Chipset	S2019A-QFN40-5*5mm		
2	PCB	S2019A-I-V1.0	MILLION SOURCE PRINTED CIRCUIT BOARD CO., LTD	
			Shen Zhen Tie Fa Technology Limited	
			Quzhou Sunlord Electronics Co., Ltd	
2	Crystal	40MHz-9pF-10ppm-3225	LUCKI CM ELECTRONICS CO, LTD	
			HUBEI TKD ELECTRONICS TECHNOLOGY CO., LTD	
			HOSONIC ELECTRONIC CO., LTD	

8. Package and Storage Information

8.1 Package Dimensions

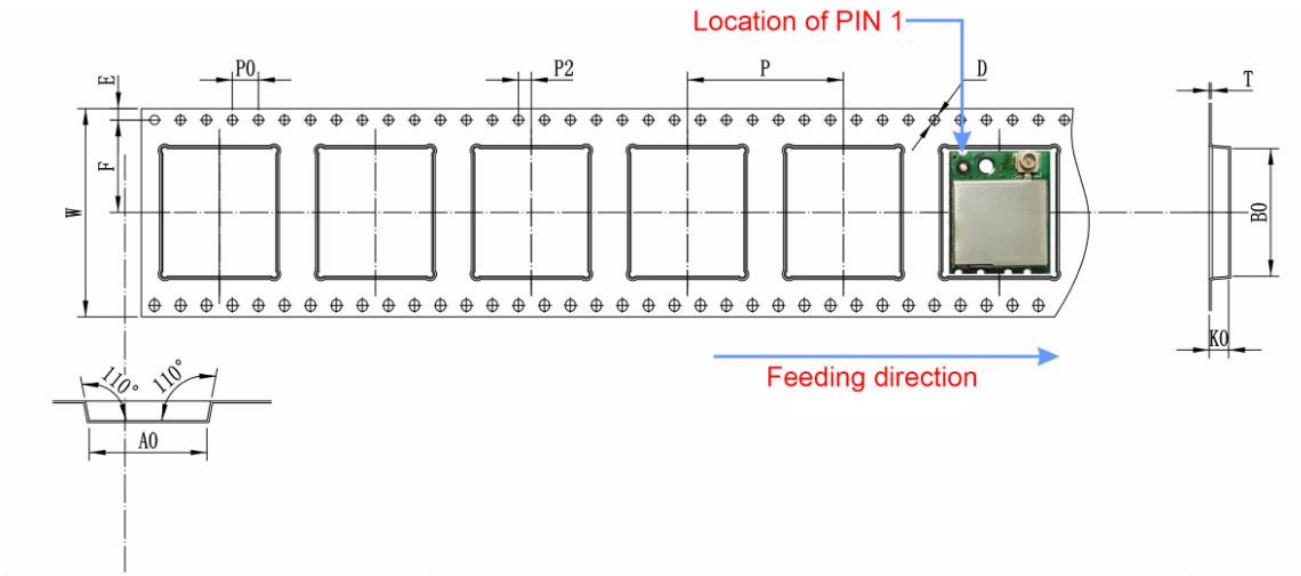

ITEM	W	A0	B0	K0	E	F	P	P0	P2	D	T
DIM	32.00+0.3	13.4±0.1	16.10±0.1	2.60±0.1	1.75±0.1	14.2±0.1	20.00±0.1	4.00±0.1	2.00±0.1	Ø1.5±0.1	0.3±0.05

Package specification:

1. 1000 modules per roll and 5,000 modules per box.
2. Outer box size: 37.5*36*29cm.
3. The diameter of the blue environment-friendly rubber plate is 13 inches, with a total thickness of 36mm (with a width of 32mm carrying belt).
4. Put 1 package of dry agent (20g) and humidity card in each anti-static vacuum bag.
5. Each carton is packed with 5 boxes.

8.2 Storage Conditions

Absolute Maximum Ratings:
Storage temperature: -45℃ to +85℃
Storage humidity: 10% to 95% RH (Non-Condensing)
Recommended Storage Conditions:
Storage temperature: 5℃ to +40℃
Storage humidity: 20% to 90% RH
Please use this Module within 12month after vacuum-packaged.
The Module shall be stored without opening the packing.
After the packing opened, the Module shall be used within 72hours.
When the color of the humidity indicator in the packing changed, the Module shall be baked before soldering.
Baking condition : 60℃, 24hours, 1time.

ESD Sensitivity :
The Module is a static-sensitive electronic device. Do not operate or store near strong electrostatic fields. Take proper ESD precautions!

FCC Statement

This device complies with part 15 of the FCC rules. Operation is subject to the following two conditions: (1) thi s device may not cause harmful interference, and (2) this device must accept any interference received, incl uding interference that may cause undesired operation.

Changes or modifications not expressly approved by the party responsible for compliance could void the user' s authority to operate the equipment.

NOTE: This equipment has been tested and found to comply with the limits for a Class B digital device, pursua nt to part 15 of the FCC Rules. These limits are designed to provide reasonable protection against harmful inte rference in a residential installation. This equipment generates uses and can radiate radio frequency energy a nd, if not installed and used in accordance with the instructions, may cause harmful interference to radio com munications. However, there is no guarantee that interference will not occur in a particular installation. If this equipment does cause harmful interference to radio or television reception, which can be determined by turn ing the equipment off and on, the user is encouraged to try to correct the interference by one or more of the following measures:

- Reorient or relocate the receiving antenna.
- Increase the separation between the equipment and receiver.
- Connect the equipment into an outlet on a circuit different from that to which the receiver is connected.
- Consult the dealer or an experienced radio/TV technician for help important announcement

Important Note:

Radiation Exposure Statement

This equipment complies with FCC radiation exposure limits set forth for an uncontrolled environment. This equipment should be installed and operated with minimum distance

20cm between the radiator and your body.

This transmitter must not be co-located or operating in conjunction with any other antenna or transmitter.

Country Code selection feature to be disabled for products marketed to the US/Canada.

This device is intended only for OEM integrators under the following conditions:

1. The antenna must be installed such that 0 cm is maintained between the antenna and users, and
2. The transmitter module may not be co-located with any other transmitter or antenna,
3. For all products market in US, OEM has to limit the operation channels in CH1 to CH11 for 2.4G band by supplied firmware programming tool. OEM shall not supply any tool or info to the end-user regarding to Regulatory Domain change. (if modular only test Channel 1-11)

As long as the three conditions above are met, further transmitter testing will not be required. However, the OEM integrator is still responsible for testing their end-product for any additional compliance requirements required with this module installed.

Important Note:

In the event that these conditions cannot be met (for example certain laptop configurations or co-location with another transmitter), then the FCC authorization is no longer considered valid and the FCC ID cannot be used on the final product. In these circumstances, the OEM integrator will be responsible for re-evaluating the end product (including the transmitter) and obtaining a separate FCC authorization.

End Product Labeling

The final end product must be labeled in a visible area with the following" Contains FCC ID: **2AZI2MH-WF328I** "

Manual Information to the End User

The OEM integrator has to be aware not to provide information to the end user regarding how to install or remove this RF module in the user's manual of the end product which integrates this module.

The end user manual shall include all required regulatory information/warning as show in this manual.

Integration instructions for host product manufacturers according to KDB 996369 D03 OEM Manual v01

2.2 List of applicable FCC rules

CFR 47 FCC PART 15 SUBPART C has been investigated. It is applicable to the modular transmitter

2.3 Specific operational use conditions

This module is stand-alone modular. If the end product will involve the Multiple simultaneously transmitting condition or different operational conditions for a stand-alone modular transmitter in a host, host manufacturer have to consult with module manufacturer for the installation method in end system.

2.4 Limited module procedures

Not applicable

2.5 Trace antenna designs

Not applicable

2.6 RF exposure considerations

This equipment complies with FCC radiation exposure limits set forth for an uncontrolled environment. This equipment should be installed and operated with minimum distance 20cm between the radiator & your body.

2.7 Antennas

This radio transmitter **FCCID: 2AZI2MH-WF328I** has been approved by Federal Communications Commission to operate with the antenna types listed below, with the maximum permissible gain indicated. Antenna types not included in this list that have a gain greater than the maximum gain indicated for any type listed are strictly prohibited for use with this device.

Model	Type	Connector	Peak gain (dBi)				
			2400-2483.5 MHz	5150-5250 MHz	5250-5350 MHz	5470-5725 MHz	5725-5850 MHz
2400-2483.5 MHz	External Antenna	/	2.0dBi	/	/	/	/
/	/	/	/	/	/	/	/

2.8 Label and compliance information

The final end product must be labeled in a visible area with the following" Contains FCC ID:2AZI2MH-WF328I".

2.9 Information on test modes and additional testing requirements

Host manufacturer is strongly recommended to confirm compliance with FCC requirements for the transmitter when the module is installed in the host.

2.10 Additional testing, Part 15 Subpart B disclaimer

Host manufacturer is responsible for compliance of the host system with module installed with all other applicable requirements for the system such as Part 15 B.