英文(面)

250mm

86mm

Gabba goods

SHOWER BEER

HOLDER AND SPEAKER

GG-SBS

Operation manual

Please read the manual before operating this product.

M&S Accessory Network declares that radio equipment GG-SBS is in compliance with Directive 2014/53/EU.
The EU Declaration of Conformity is available at www.GabbaGoods.com

Contents

1.Introduction.....1
2. Package Contents.....2
3. Features.....2
4. Turning Speaker On/Off.....2
5. Pairing to a Bluetooth Enabled Mobile Phone.....3
6. Hands free Function.....4
7. PAUSE/PLAY.....4
8. NEXT/PREVIOUS.....4
9. Charging.....5
10. Features.....7

Compatible with all Bluetooth® enabled devices

The Bluetooth® word mark and logos are registered trademarks owned by the Bluetooth SIG, Inc.

Gabba goods

1.Introduction

Thank you for purchasing our product! In order to get the best use of this Beer Shower Bluetooth Speaker, please read this user manual to get yourself familiar with the speaker's features and functions!

Caution:

Please use and store this product at room temperature.
DO NOT leave out in hot temperature
Do not expose this product to rain or wet conditions
Do not throw or drop this product, as it will cause damage
Do not try to dismantle or repair the product on your own
Do not use a chemical solvent to clean the product
Please do not leave this product near a fire or open flame

Safety Rules

1	Please follow the rules depicted in this manual closely to ensure your safety. Before using the product, we would strongly encourage you to read through this user manual.
2	Be wary of any edges, uneven surfaces, metal parts, accessories and its packaging to prevent any possible injury or damage.
3	Do not modify, repair or dismantle the product. Doing so may result in fire, electric shock, complete breakdown of the product, etc. All of which are not covered under warranty.
4	Do not use any diluent or volatile liquid to clean the product.
5	Do not use the product in a hazardous location.

2. Package Contents

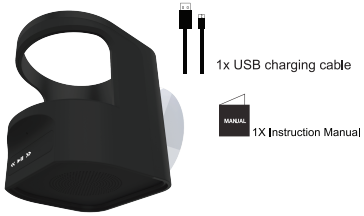

SHOWER BEER
HOLDER AND SPEAKER

3. Features

- Wireless Bluetooth Connectivity
- Built in Mic for hands-free calling
- Rechargeable with its built in efficient lithium ion battery
- Built-in sucker to enjoy music everywhere

4. Turning Speaker On/Off

Turn on & enter the pairing mode: Press and hold the ⏻ Power On/Off for 2-3 seconds to power on the Shower Speaker and enter the pairing mode.

Turn Off: Press and hold the ⏻ Power On/Off button till speaker powers off.

5. Pairing to a Bluetooth® Enabled Mobile Phone

1. On your smartphone/device be sure that the Bluetooth is powered on.
2. Power on the speaker and you will hear the following voice prompt "Bluetooth pairing mode"; the indicate light will begin to flash blue rapidly.
3. Open the Bluetooth connection settings on your device and make sure that the Bluetooth is turned on, and your device will start to search for the speaker. You will find the "Beer Speaker" in your device list, click on it to connect.
4. Once connected successfully you will hear a voice prompt, "The Bluetooth device is connected successfully".

6. Hands free Function

1. Enjoy hands free calling with the Speaker when connected to the Bluetooth on your smart device. When you receive an incoming calls, it will voice prompt the incoming phone number.
2. Press the "PHONE CALL "button to answer the phone call
3. Press the button again to end the phone
4. If you want to reject the call press and hold the "PHONE CALL" button.

7. PAUSE/PLAY:

1. When the music playing under the Bluetooth mode, press the "PAUSE" button to pause the song, press again to play the song continually.

8. NEXT/PREVIOUS TRACK & VOLUME CONTROL:

while playing your music, press and hold down the ⏮/+ previous track / volume up button to go back to the previous track, press ⏮/+ to increase the volume.

press the ⏭/- next track / volume down button to skip to the next track, press ⏭/- to lower the volume.

9. Charging

The Shower Beer Speaker comes with a built-in rechargeable battery. Before using it for the first time, we recommend you charge the battery fully. Only use the supplied USB cable to charge the speaker.

Connect the included Micro USB Cable to the charging port of the Speaker, and the USB end into a PC/Laptop or wall charger. The red LED light will illuminate while the Speaker is charging, please charge the battery fully the first time for 3 hours.
When the battery is fully charged, the LED light will turn off.

Once Fully Charged disconnect the charging cable, and your Speaker is now ready for use. When the battery is low, the LED will flash red and emit three tones every 20 seconds or prompt you "battery is low". When this occurs, please recharge the Speaker.

*Make sure to charge the speaker for a minimum of 3 hours before initial use.

This product is intended for purchase by persons of legal drinking age

10. Features

1. Power on/off
2. Previous Track / Volume Up
3. Next Track / Volume Down
4. LED Light
5. USB Charging port
6. Speaker
7. Mic
8. Dual Suction Cup

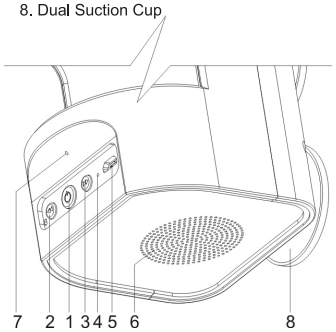

Support

If you have problems with your device, please consult the instructions in this manual.

Manufacturer Warranty
We stand by our products! That's why we guarantee them from any functional defects for one year from the original date of purchase. Should you have an issue please email us at info@GabbaGoods.com or visit us on the web at www.GabbaGoods.com

SHOWER BEER
HOLDER AND SPEAKER

WARRANTY 1 YEAR

GG-SBS CE

Distributed by:
M&S Accessory Network Corp.,
New York, NY 10001
Designed in The U.S.A. | Made in China

www.GabbaGoods.com
Technical Support

Keep All Relevant Information for Future Reference.

FCC Warning Statement

Changes or modifications not expressly approved by the party responsible for compliance could void the user's authority to operate the equipment. This equipment has been tested and found to comply with the limits for a Class B digital device, pursuant to Part 15 of the FCC Rules. These limits are designed to provide reasonable protection against harmful interference in a residential installation. This equipment generates uses and can radiate radio frequency energy and, if not installed and used in accordance with the instructions, may cause harmful interference to radio communications. However, there is no guarantee that interference will not occur in a particular installation. If this equipment does cause harmful interference to radio or television reception, which can be determined by turning the equipment off and on, the user is encouraged to try to correct the interference by one or more of the following measures:

- Reorient or relocate the receiving antenna.
- Increase the separation between the equipment and receiver.
- Connect the equipment into an outlet on a circuit different from that to which the receiver is connected.
- Consult the dealer or an experienced radio/TV technician for help.

This device complies with part 15 of the FCC Rules. Operation is subject to the following two conditions: (1) This device may not cause harmful interference, and (2) this device must accept any interference received, including interference that may cause undesired operation.

RF Exposure Statement

To maintain compliance with FCC's RF Exposure guidelines, This equipment should be installed and operated with minimum distance of 20 cm the radiator your body. This device and its antenna(s) must not be co-located or operation in conjunction with any other antenna or transmitter.