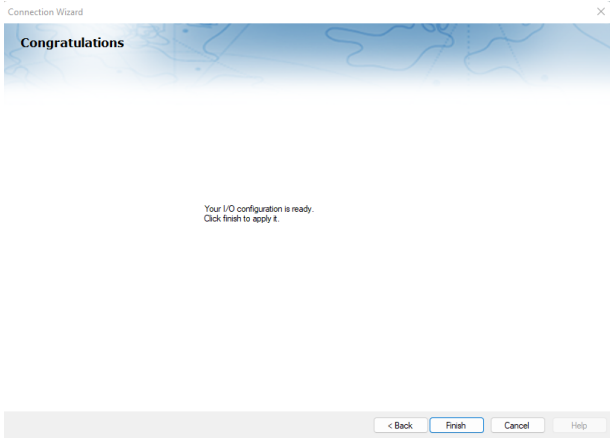

Setting up Fishing Buoys

- Download "customer-name".tzaisbuoys file given by Blue Ocean Gear.
- Open TimeZero and navigate to the top left corner of the window. Select the 3 horizontal bars and click on the first option called “options"
- Navigate to “Targets” menu found on the left side. Once selected, scroll down until you find “Set AIS Buoys” button.

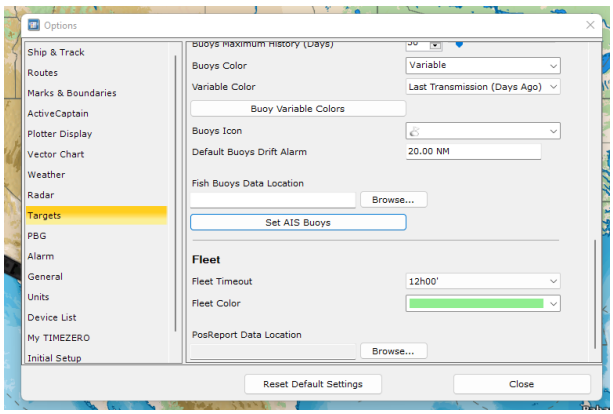

- Click on “Set AIS Buoys” and you should see the following screen

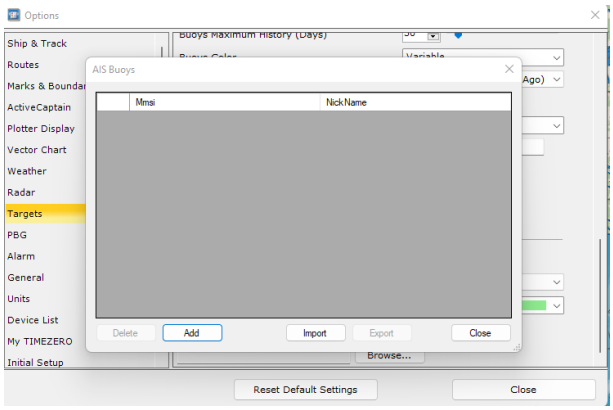

- Click on “Import” button and navigate to where "customer-name".tzaisbuoys file is downloaded in first step.

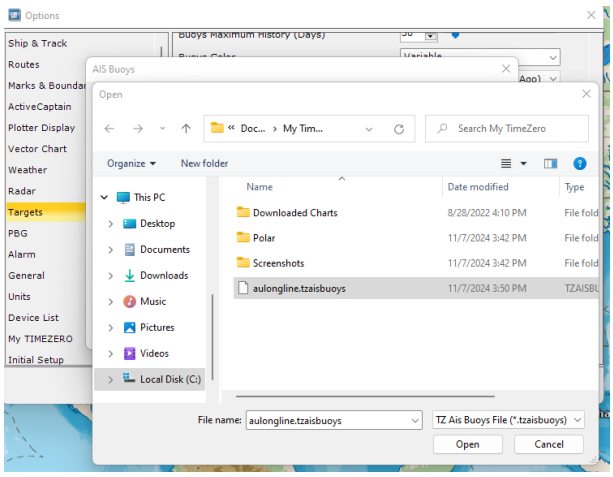

- Click on .tzaisbuoys file and select “Open” button. You should see the following screen.

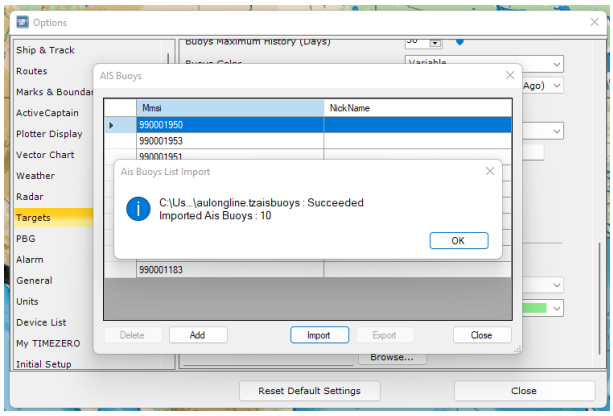

- After the PL system has been powered put a buoy in the water at the dock and allow it time, 15-20min, to send an update.
- Check "Fishing Buoys list" under "Lists" for a fishing buoy target and location makes sense.

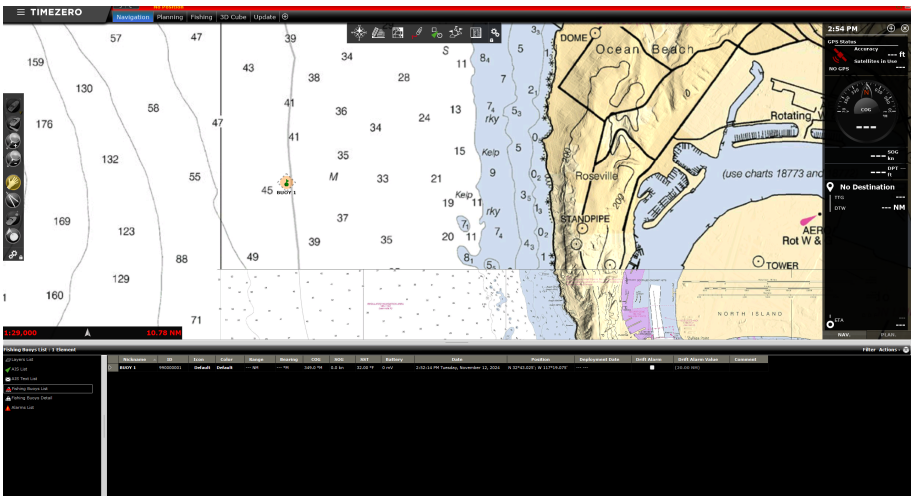

2.2 Garmin 7x2, 9x2 plotter

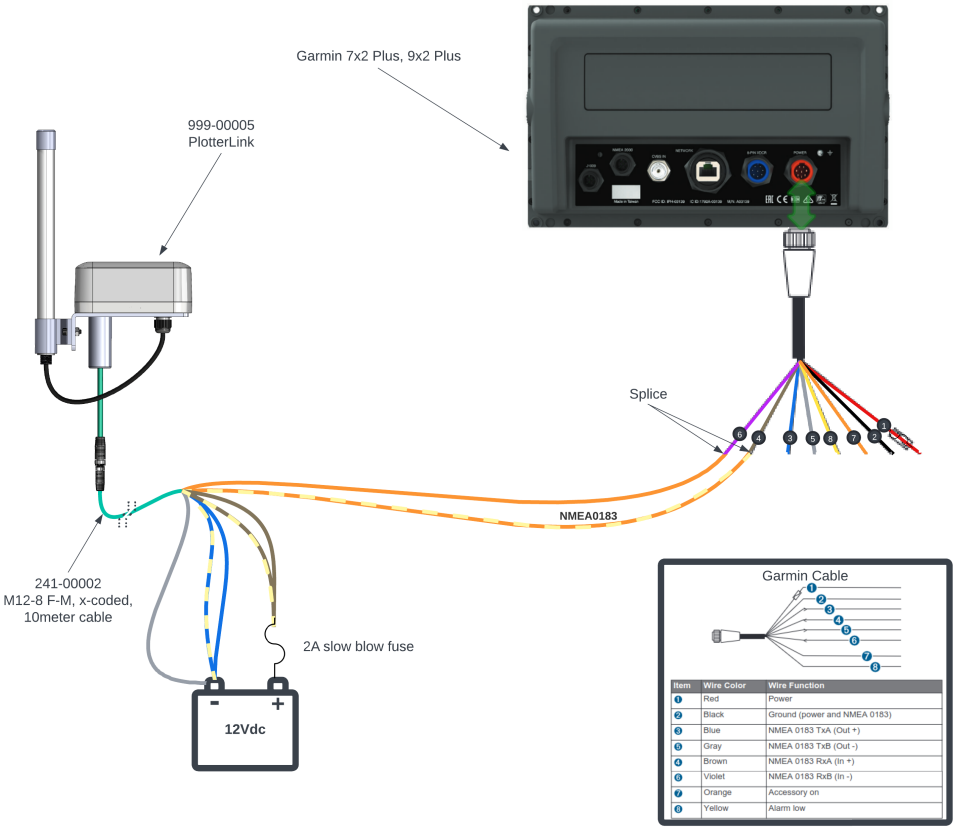

Item	Wire Color	Wire Function
1	Red	Power
2	Black	Ground (power and NMEA 0183)
3	Blue	NMEA 0183 TxA (Out +)
5	Gray	NMEA 0183 TxB (Out -)
4	Brown	NMEA 0183 RxA (In +)
6	Violet	NMEA 0183 RxB (In -)
7	Orange	Accessory on
8	Yellow	Alarm low

©2024 Blue Ocean Gear

2.3 CP590 plotter, ACC1

PIN	WIRE COLOR	FUNCTION	CONNECTION EXAMPLE
1	BLACK	Battery Ground	
2	RED	Battery Positive	
3	GREEN	NMEA Common	Common (ground) for NMEA devices*
4*	BLUE	Port1 Input	Connect to Output of NMEA device*
5	BROWN	Port1 Output	Connect to Input of NMEA device*. Default is NMEA-0183 with GLL, RMB, RMC and XTE sentences
6	GRAY	Port2 Input	Connect to Output of NMEA device*
7	WHITE	Port2 Output	Connect to Input of NMEA device*. Default is NMEA-0183 with GLL, RMB, RMC and XTE sentences
8**	YELLOW	Port3 Output	Connect to Input of NMEA device*. Default is NMEA-0183 with APA, APB, XTE, COG and BOD sentences

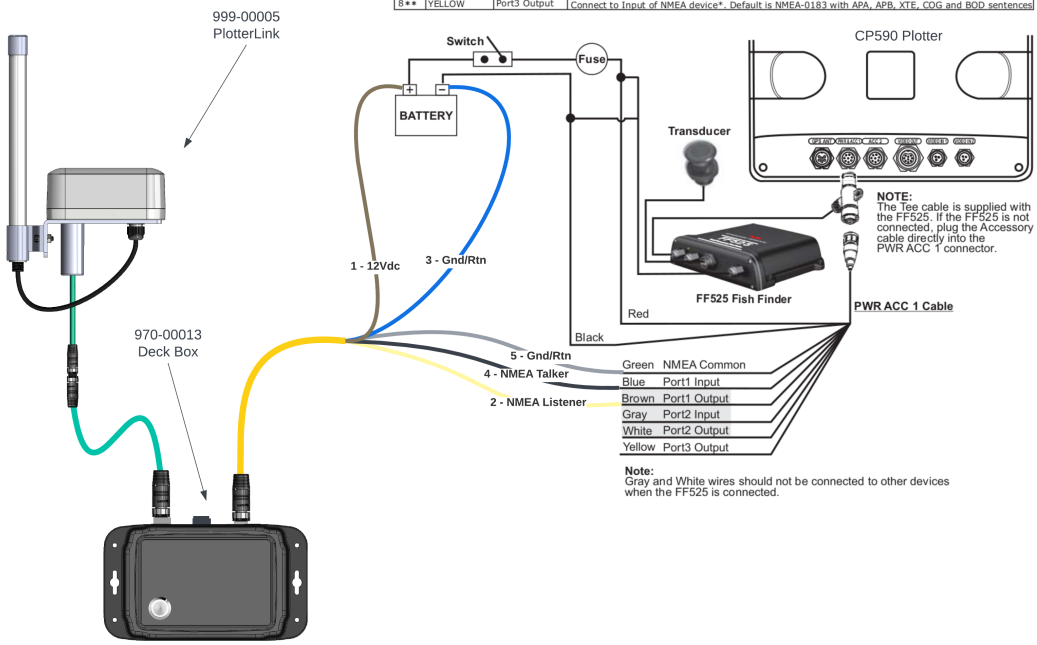

2.4 Olex System

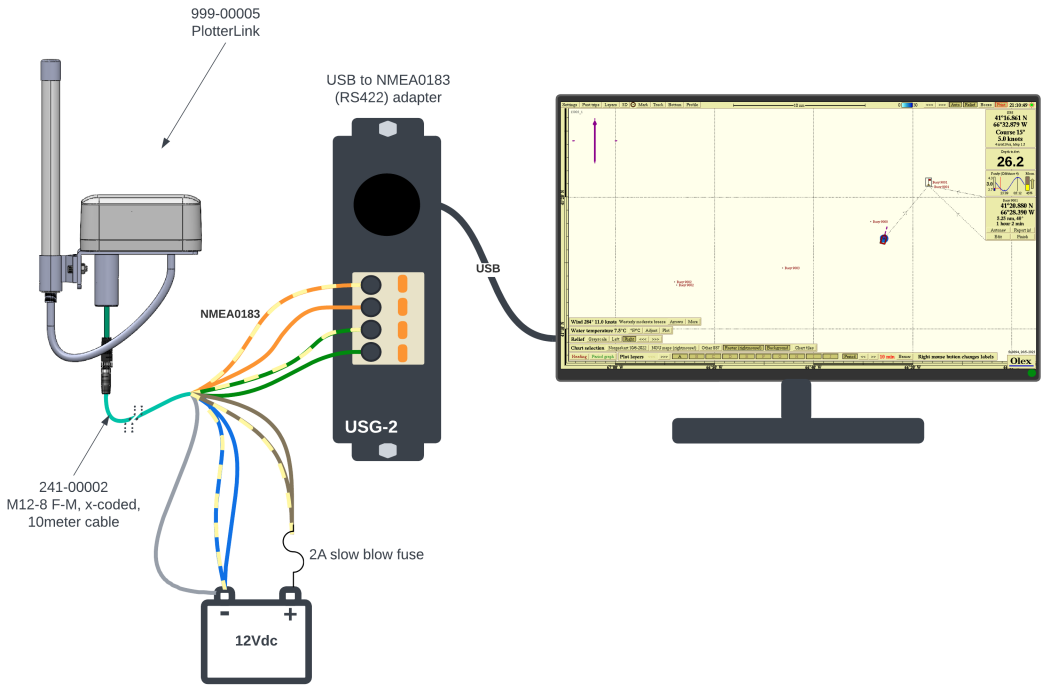

Olex configuration:

- Check the serial port the PL is attached to by viewing the data in the Data Layer, make note of it
- Reboot the system into maintenance mode
- Create a file called serieporter if it does not already exist
- add the following line to the serieporter file "/dev/ttyS2 -eventwpl" with the serial port name you noted earlier
- Reboot the system into normal mode

2.5 Other plotters

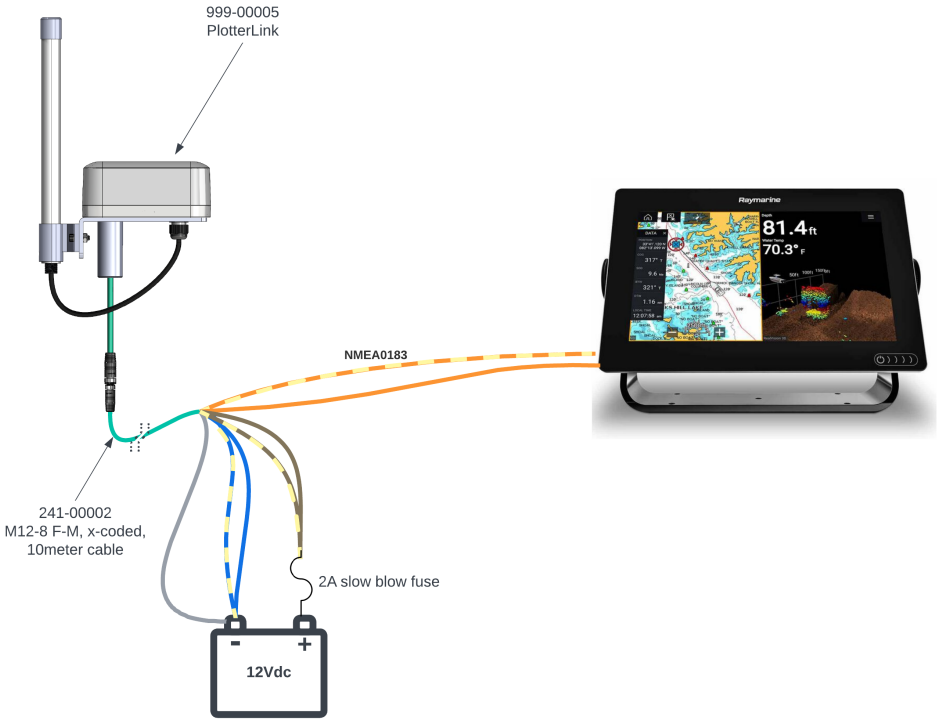

3 PlotterLink system, how it works

3.1 PL Communications System

The PL communicates directly with Blue Ocean Gear Farallon buoys as well as the Blue Ocean Gear cloud. It enables the display of data, primarily buoy position, on common navigation plotters.

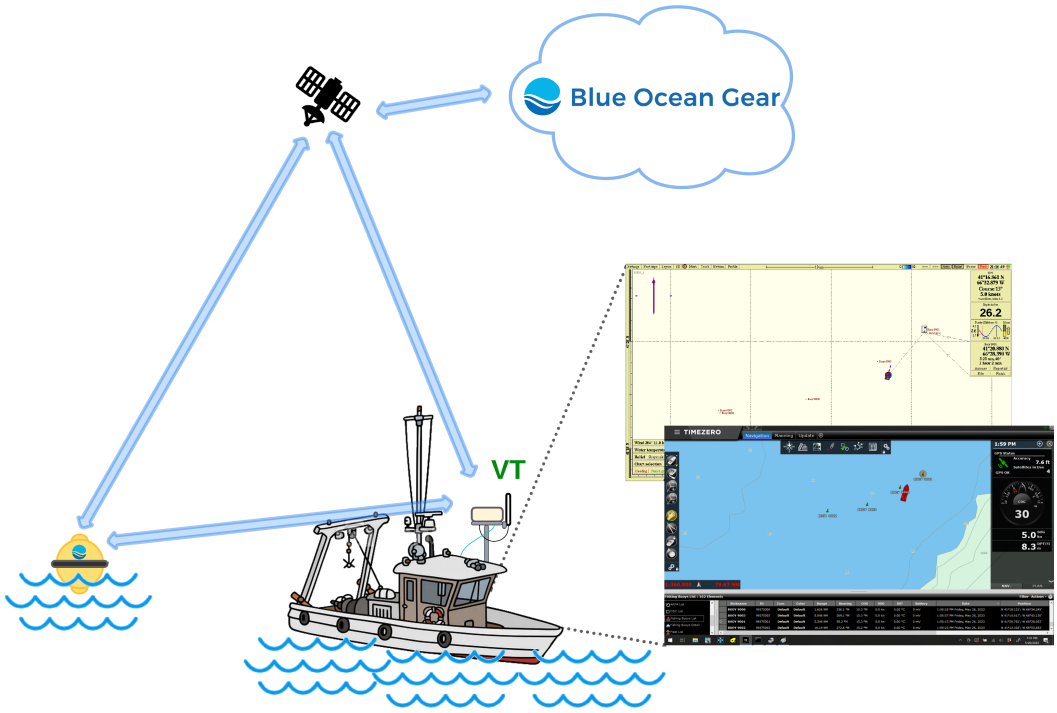

The PL makes use of both Iridium and ISM band radio links. The buoy data it receives over these links are then passed as NMEA sentences; standard to most plotters.

Blue Ocean gear will customize these settings and can change them remotely, to suit your installation's needs. Coordinate with the BOG team to select the configuration that works best with your navigation plotter.

3.2 Specifications

Table 1: Specifications

Description	Specification	Units
Storage Temperature	-20C - 70C	°C
Operation Temperature	-10C - 70C	°C
Input power	12 Vdc, 2A max	V, A
Communications	NMEA0183 >v2.0, 4800 baud, EIA-422-A	-

©2024 Blue Ocean Gear

NOTICE

NOTE: This equipment has been tested and found to comply with the limits for a Class B digital device, pursuant to part 15 of the FCC Rules. These limits are designed to provide reasonable protection against harmful interference in a residential installation. This equipment generates, uses and can radiate radio frequency energy and, if not installed and used in accordance with the instructions, may cause harmful interference to radio communications. However, there is no guarantee that interference will not occur in a particular installation. If this equipment does cause harmful interference to radio or television reception, which can be determined by turning the equipment off and on, the user is encouraged to try to correct the interference by one or more of the following measures:
—Reorient or relocate the receiving antenna.
—Increase the separation between the equipment and receiver.
—Connect the equipment into an outlet on a circuit different from that to which the receiver is connected.
—Consult the dealer or an experienced radio/TV technician for help.

This device complies with part 15 of the FCC Rules. Operation is subject to the following two conditions: (1) This device may not cause harmful interference, and (2) this device must accept any interference received, including interference that may cause undesired operation.
The user’s manual or instruction manual for an intentional or unintentional radiator shall caution the user that changes or modifications not expressly approved by the party responsible for compliance could void the user's authority to operate the equipment. In cases where the manual is provided only in a form other than paper, such as on a computer disk or over the Internet, the information required by this section may be included in the manual in that alternative form, provided the user can reasonably be expected to have the capability to access information in that form.

This equipment complies with FCC radiation exposure limits set forth for an uncontrolled environment. End users must follow the specific operating instructions for satisfying RF exposure compliance. This transmitter must be at least 20 cm from the user and must not be co-located or operating in conjunction with any other antenna or transmitter. The information in this guide may change without notice. The manufacturer assumes no responsibility for any errors that may appear in this guide.

This device complies with Innovation, Science and Economic Development Canada’s licence-exempt RSSs. Operation is subject to the following two conditions:
(1) This device may not cause interference; and
(2) This device must accept any interference, including interference that may cause undesired operation of the device.

Cet appareil est conforme aux flux RSS exemptés de licence d'Innovation, Science et Développement économique Canada. L'opération est soumise aux deux conditions suivantes:
(1) Cet appareil ne doit pas provoquer d'interférence; et
(2) Cet appareil doit accepter toute interférence, y compris les interférences susceptibles de provoquer un fonctionnement indésirable del'appareil.

This equipment complies with the IC RSS-102 radiation exposure limits set forth for an uncontrolled environment. This equipment should be installed and operated with a minimum distance of 20 cm between the radiator and your body.
Énoncé d'exposition aux rayonnements: Cet équipement est conforme aux limites d'exposition aux rayonnements ioniques RSS-102 Pour un environnement incontrôlé. Cet équipement doit être installé et utilisé avec un Distance minimale de 20 cm entre le radiateur et votrecorps.

©2024 Blue Ocean Gear