Amantii

ELECTRIC FIREPLACE

www.amantii.com

INSTALLATION AND OPERATION INSTRUCTIONS FOR

SYM-34 BESPOKE
BS1900034-1

SYM-42 BESPOKE
BS1900042-1

SYM-50 BESPOKE
BS1900050-1

SYM-60 BESPOKE
BS1900060-1

SYM-74 BESPOKE
BS1900074-1

SYM-88 BESPOKE
BS1900088-1

SYM-100 BESPOKE
BS1900100-1

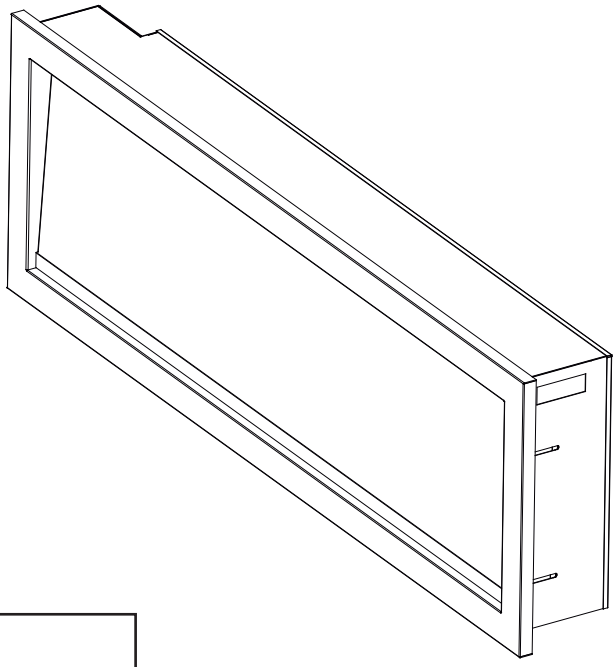

SAFETY INFORMATION

WARNING

if the information in these instructions are not followed exactly, a fire or explosion may result causing property damage, personal injury or loss of life.

Do not store or use gasoline or other flammable vapors and liquids in the vicinity of this or any other.

INSTALLER: LEAVE THIS MANUAL WITH THE APPLIANCE.

CONSUMER: RETAIN THIS MANUAL FOR FUTURE REFERENCE.

WARNING: This product can expose you to chemicals including lead in the wiring, which is [are] known to the State of California to cause birth defects of other reproductive harm. For more information visit: www.p65warnings.ca.gov

TABLE OF CONTENTS

Please read and carefully follow all of the instruction found in this manual. Please pay special attention to the safety instructions provided in this manual. The instructions included here will assure that you have many years of dependable and enjoyable service from your Amantii product.

IMPORTANT INSTRUCTIONS 3
CAUTIONS 4
FCC STATEMENT 4
UNPACKING AND TESTING APPLIANCE 5
GROUNDING APPLIANCE 5
LOCATING THE FIREPLACE 5
PRODUCT SPECIFICATION 6
OUTDOOR INSTALLATIONS 8
INSTALLATION-WALL MOUNT 9
INSTALLATION- BUILT-IN 10
HARD- WIRE INSTALLATION 13
DECORATIVE MEDIA INSTALLATION 14
MANUAL OPERATION 15
REMOTE CONTROL OPERATION 16
ENERGY SAVING FUNCTION 18
TROUBLE SHOOTING 19
REPLACEMENT PARTS 19
EXPLODED VIEW 21

IMPORTANT INSTRUCTIONS

1. Read all instructions before installing or using this heater.

2. Keep combustible materials, such as furniture, pillows, bedding, papers, clothes and curtains at least 3 feet from the front, sides and rear of the heater.

3. Always unplug heater when not in use.

4. Do not operate the fireplace if it has a damaged cord or plug, after it has malfunctioned, or if the unit has been dropped or damaged in any way.

5. Do not run the cord under carpeting. Do not cover the cord with throw rugs, runners or anything else. Arrange the cord away from traffic areas where it could not be tripped over.

6. To disconnect the heater, turn the controls to "OFF" before removing the plug from the outlet.

7. Do not insert or allow foreign objects to enter any ventilation or exhaust opening, as this may cause an electric shock, fire or damage to the heater.

8. To prevent a possible fire, do not block air intakes in any manner.

9. A heater has hot and arcing or sparking parts inside. Do not use it in areas where gasoline, paint or flammable liquids are used or stored.

10. Use this heater only as described in this manual. Any other use not recommended by the manufacturer may cause fire, electric shock or injury.

11. Avoid the use of an extension cord, the extension cord will overheat and cause a fire. This heater is not to be used with an extension cord.

12. Always use properly grounded fused and polarized outlets.

13. Always use ground fault protection where it is required by electrical codes.

14. Always disconnect the power before performing any cleaning, maintenance or relocation of the heater.

15. To prevent a possible fire, do not burn wood or other materials in this heater.

16. To prevent electric shock or fire, always use a certified electrician, should new circuits or outlets be required.

17. When transporting or storing the heater, keep it in a dry place, free from excessive vibration.

18. This appliance should not be modified under any circumstances.

19. Packaging material should be kept away from children and be disposed of in a safe manner. Plastic bags are not toys and should be kept away from children and infants.

20. Do not use this heater in small rooms when they are occupied by persons not capable of leaving the room on their own, unless constant supervision is provided.

21. If the glass is damaged, do not use the heater in order to avoid a hazard.

22. Do not leave children unsupervised where heater is turned on.

23. CAUTION Some parts of this product can become very hot and cause burns. Particular attention has to be given where children and vulnerable people are present.

SAVE THESE INSTRUCTIONS

CAUTIONS

Do's	Always install the heater in accordance with this guide. If in doubt obtain expert advice.
	Always make sure the electrical socket is accessible and located adjacent to, but not above the heater.
	Always disconnect the heater from the electrical supply before moving it, or carrying out cleaning, maintenance.
	Always make sure the heater is firmly secured to prevent it from being tipped over.
	Always use a fireguard when young children and infirm persons can come into contact with the heater.
Don'ts	Never leave children unsupervised in a room where the heater is ON and unguarded.
	Never obstruct or cover the fan outlet or force items into heater openings.
	Never use aerosols or steam cleaners on or around the heater.
	Never route the main supply cable under carpet etc.
	Never install the heater close to curtains or combustible materials.
	Never use the heater to dry clothes etc.
	Never sit or stand on the heater.

FCC STATEMENT

This device complies with Part 15 of the FCC rules. Operation is subject to the following two conditions: 1) this device may not cause harmful interference, and 2) this device must accept any interference received, including interference that may cause undesired operation.

This equipment has been tested and found to comply with the limits for a Class B digital device, pursuant to Part 15 of the FCC rules. These limits are designed to provide reasonable protection against harmful interference in a residential installation. This equipment generates, uses and can radiate radio frequency energy and if not installed and used in accordance with the instructions, may cause harmful interference to radio communications. However, there is no guarantee that interference will not occur in a particular installation. If this equipment does cause harmful interference to radio or television reception, which can be determined by turning the equipment off and on, the user is encouraged to try correct the interference by one or more of the following measures:
- Reorient the receiving antenna.
- Increase the separation between the equipment and receiver.
- Connect the equipment into and outlet on a circuit different from that to which the receiver is connected.
- Consult the dealer or an experienced radio/TV technician for help.

Changes or modifications not expressly approved by the party responsible for compliance could void your authority to operate the equipment.
The distance between user and products should be no less than 20cm

UNPACKING AND TESTING APPLIANCE

Carefully remove the appliance from the box.

Prior to installing the appliance, test to make sure the appliance operates properly by plugging the power supply cord into a 120 Volt grounded outlet.

Test all aspects of its operation (manual switches, remote and heater) to make sure all components are operating correctly.

As with most electronic devices, your new electric fireplace has been designed to operate at temperatures between 5 ℃(41 ℉) and 35℃ (95 ℉). During the cold winter months, allow the fireplace to reach room temperature before turning it on.

NOTE: There may be trace of odor during the first few minutes of initial use. This is harmless, normal and will never occur again.

GROUNDING APPLIANCE

This appliance is for use on 120 Volts. The cord has a plug as shown in (A). An adapter as shown in (C) is available for connecting three-blade grounding type plugs to two-slot. The green grounding lug extending from the adapter must be connected to a permanent ground such as a properly grounded outlet box. The adapter should not be used if a three-slot grounded receptacle is available.

To disconnect appliance, turn controls to off, then remove plug from outlet.

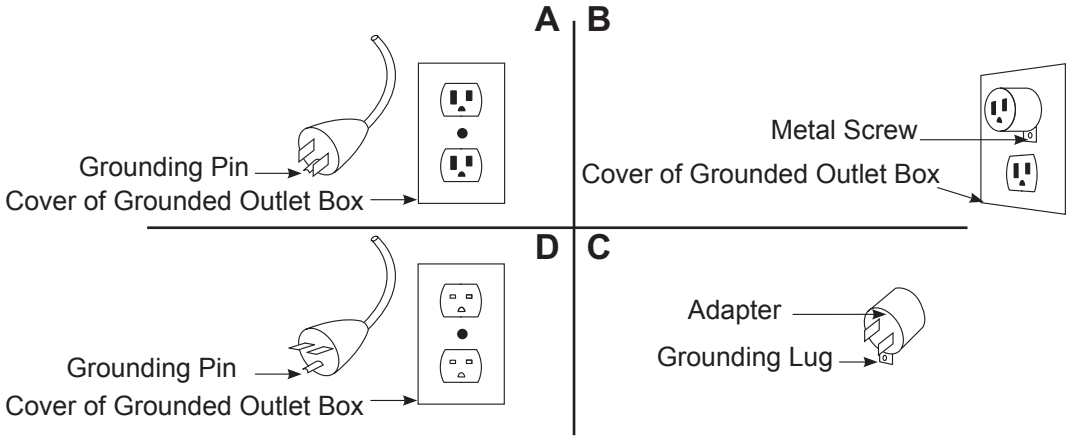

LOCATING THE FIREPLACE

Plan where to locate and frame the fireplace. This will save time and money later when you install the fireplace. Before installation consider the following:

1. Where the fireplace is located must allow for wall and ceiling clearances.

2. Consider a location where the fireplace screen will not be exposed to direct sunlight from windows or doors.

3. A 15 ampere, 120 Volt, 60 Hz branch circuit with proper ground must be available at the location. Preferably a dedicated branch circuit should be provided to avoid circuit breakers to trip of fuses to blow.

PRODUCT SPECIFICATION

This appliance has been tested in accordance with the UL Standard 2021 for fixed and location dedicated electric room appliances in the United States and Canada. If you need assistance during installation, please contact your local dealer.

NOTE: This appliance must be electrically wired and grounded in accordance with local codes. In the absence of local codes, use the current CSA C22.1 Canadian Electrical Code in Canada or the ANSI/NFPA 70 National Electrical Code in the United States.

product model	BS1900034-1 (SYM-34 BESPOKE)	BS1900042-1 (SYM-42 BESPOKE)	BS1900050-1 (SYM-50 BESPOKE)	BS1900060-1 (SYM-60 BESPOKE)
Voltage	120V AC 60Hz	120V AC 60Hz	120V AC 60Hz	120V AC 60Hz
Watts	1500W Max	1500W Max	1500W Max	1500W Max
BTU	4095	4095	4095	4095
Appliance size (W x H x D)	32 3/8”x 15 5/8” x 5 1/2” 82.3 x 39.6 x 14 cm	42 1/4”x 15 5/8” x 5 1/2” 112.5 x 39.6 x 14 cm	50 1/4”x 15 5/8” x 5 1/2” 127.6 x 39.6 x 14 cm	60 1/4”x 15 5/8” x 5 1/2” 153 x 39.6 x 14 cm
Glass Viewing (W1 x H1)	30 5/8” x 13 1/8” 77.7 x 33.2 cm	40 3/8” x 13 1/8” 102.7 x 33.2 cm	48 1/2” x 13 1/8” 123.1 x 33.2 cm	58 3/8” x 13 1/8” 148.4 x 33.2 cm
Frame size (W2 x H2)	34 1/2” x 16 7/8” 87.5 x 43 cm	44 1/4” x 16 7/8” 112.5 x 43 cm	52 1/4” x 16 7/8” 132.7 x 43 cm	62 1/4” x 16 7/8” 158.2 x 43 cm
Wall Opening Size (W3 x H3 x D3)	32 7/8” x 16” x 6” 83.5 x 40.6 x 152 cm	42 3/4” x 16” x 6” 108.6 x 40.6 x152 cm	50 3/4” x 16” x 6” 128.9 x 40.6 x152 cm	60 3/4” x 16” x 6” 154.3 x 40.6 x152 cm
Cord Length	70.9” < L < 95.5” 180 cm < L < 240 cm	70.9” < L < 95.5” 180 cm < L < 240 cm	70.9” < L < 95.5” 180 cm < L < 240 cm	70.9” < L < 95.5” 180 cm < L < 240 cm

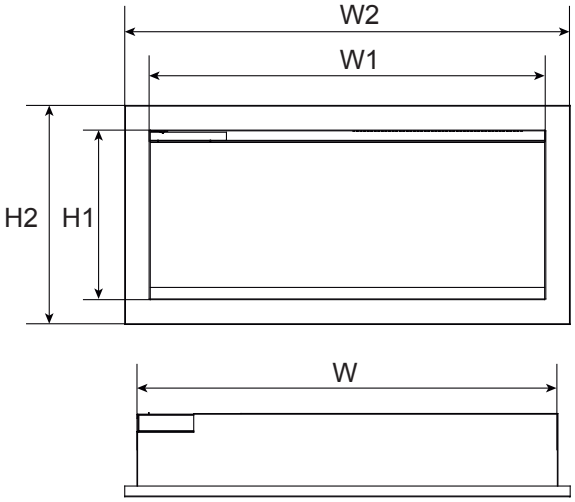

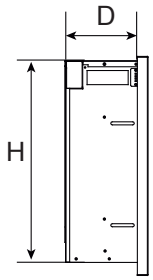

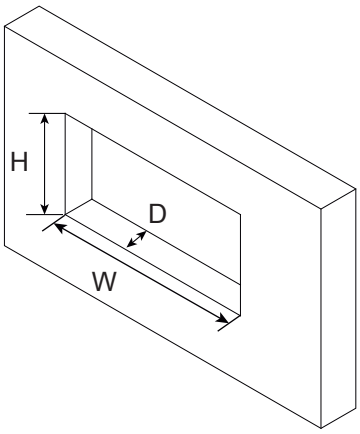

product model	BS1900074-1 (SYM-74 BESPOKE)	BS1900088-1 (SYM-88 BESPOKE)	BS1900100-1 (SYM-100 BESPOKE)
Voltage	120V AC 60Hz	120V AC 60Hz	120V AC 60Hz
Watts	1500W Max	1500W Max	1500W Max
BTU	4095	4095	4095
Appliance size (W x H x D)	74 1/4" x 15 5/8" x 5 1/2" 188.5 x 39.6 x 14 cm	88 1/4" x 15 5/8" x 5 1/2" 224.1 x 39.6 x 14 cm	100 1/4" x 15 5/8" x 5 1/2" 254.6 x 39.6 x 14 cm
Glass Viewing (W1 x H1)	72 3/8" x 13 1/8" 184 x 33.2 cm	86 3/8" x 13 1/8" 219.5 x 33.2 cm	98 3/8" x 13 1/8" 250 x 33.2 cm
Frame size (W2 x H2)	76 1/4" x 16 7/8" 193.7 x 43 cm	90 1/4" x 16 7/8" 229.3 x 43 cm	102 1/4" x 16 7/8" 254.6 x 43 cm
Wall Opening Size (W3 x H3 x D3)	74 3/4" x 16" x 6" 189.9 x 40.6 x 152 cm	90 1/4" x 16" x 6" 229.3 x 40.6 x 152 cm	100 3/4" x 16" x 6" 254.6 x 40.6 x 152 cm
Cord Length	70.9" < L < 95.5" 180 cm < L < 240 cm	70.9" < L < 95.5" 180 cm < L < 240 cm	70.9" < L < 95.5" 180 cm < L < 240 cm

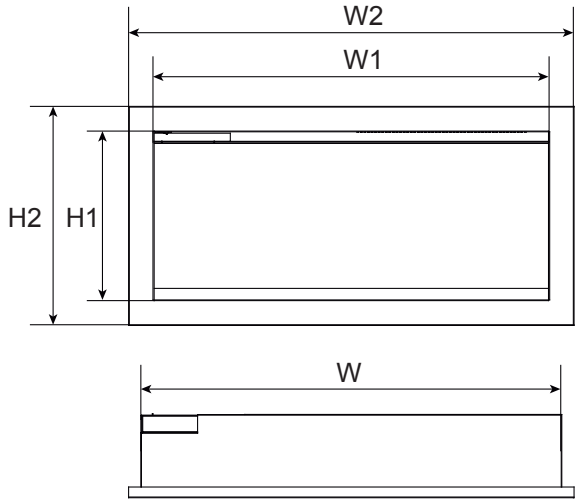

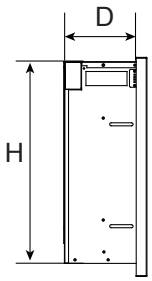

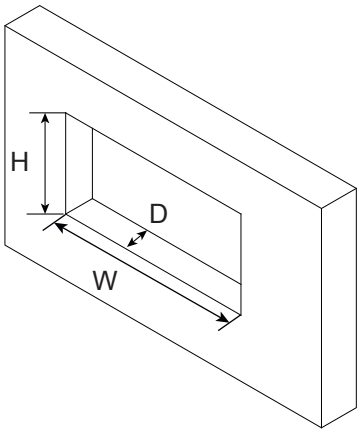

OUTDOOR INSTALLATIONS

The Symmetry Bespoke Series electric fireplaces are suitable for installation in outdoor areas protected from direct water impingement. In addition to maintaining the listed mantel and combustibles clearances, a rain protection overhang factor of 1/2 shall be constructed to the front and to each side of the installed appliance. See illustration below. All wiring connections to line power shall be in accordance with local building code requirements. Inquires about local codes and regulations must be done prior to installation.

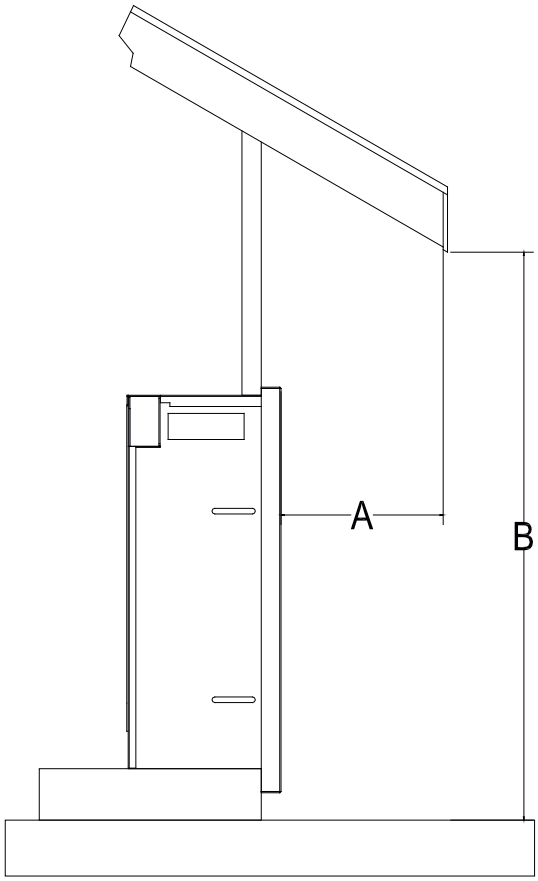

The overhang(A) must extend at least 1/2 the roof-line height. Height is measured from the base of the fireplace.

For example: if the roof-line(B) is 8” above the base of the fireplace, the overhang(A) must be at least 4”.

INSTALLATION-WALL MOUNT

NOTE: Due to the many different materials used to build walls, it is highly recommended that you consult your local builder before you install this appliance on a wall.

1. Select a location that is not prone to moisture and is located at least 0.91 m or 3 feet away from combustible materials such as curtains or drapes, furniture, bedding, paper, etc.

2. Using a spirit level to select a position in which to mount the heater horizontally. See Figure 1.

3. Check the wall to ensure there is no wiring, pipe wires etc in the area to be drilled. Drill 6 or more holes depending on the size of he unit purchased, using a suitable size drill bit and insert the wall plugs into the holes.

4. Remove the hanger from the fireplace by removing the screws. See Figure 2.

5. Fasten the hanger to the wall. See Figure 3.

6. To prevent fireplace from moving, use the provided safety screw to fasten the fireplace to the wall. See Figure 4.

WARNING: Be sure that the bolts have been fixed firmly enough to withstand the weight!

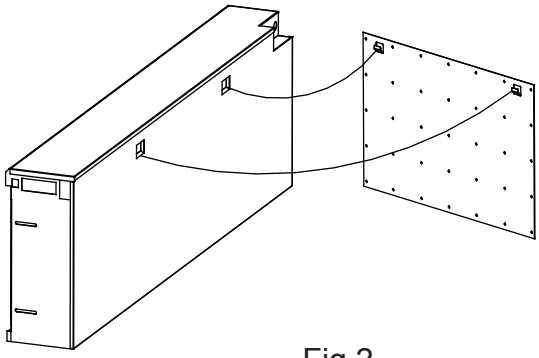

Fig 2

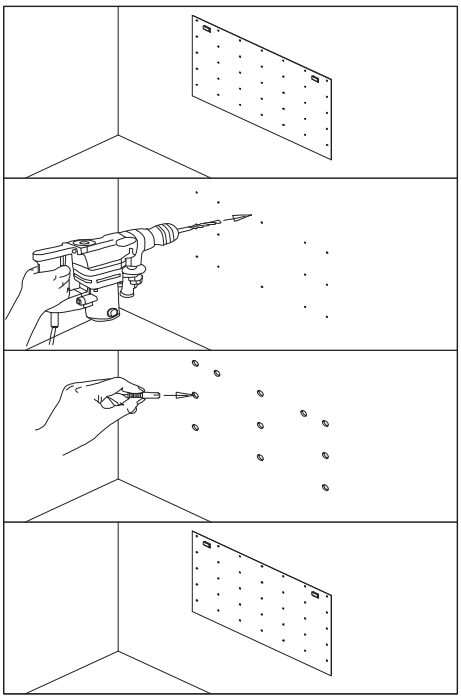

Fig 3

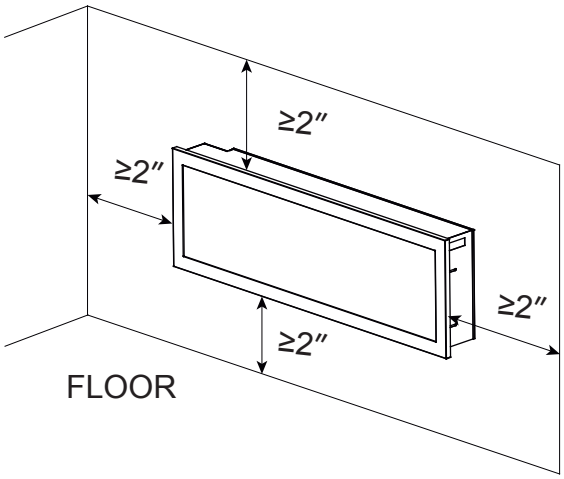

Fig 1

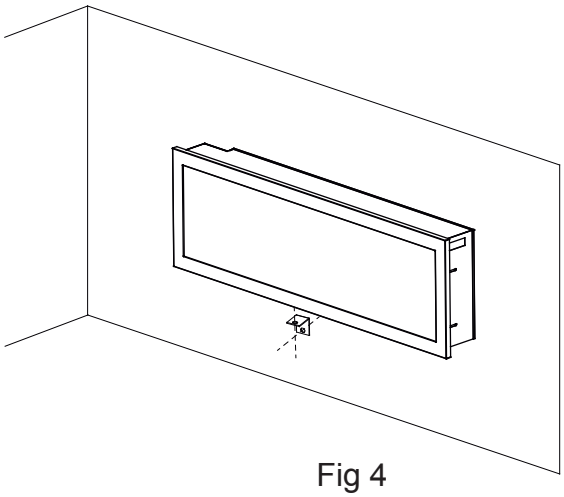

Fig 4

INSTALLATION- BUILT-IN

NOTE: Due to the many different materials used to build walls, it is highly recommended that you consult your local builder before you install this appliance on a wall.

PREPARATION

Select a location that is not prone to moisture and is located at least 0.91m or 3 feet away from combustible materials such as curtains, drapes, furniture, bedding, paper, etc.

2. Mark the desired location on the floor and store the appliance in a safe, dry and dust free place.

3. Prepare a wall with a framed opening to accommodate the size of your unit. Leave at least 1/4” (6mm) around the edge of the appliance. Any new wiring must be done in compliance with local and national codes and other applicable regulations.

Prior to installing, test the appliance to make sure the appliance is fully operational by plugging the power supply cord into a 120 Volt grounded outlet.

THE ROUGH WALL OPENING SIZE OF THE FIREPLACE PLEASE REFER TO THE PRODUCT SPECIFICATION SHEET.

INSTALLATION

1. Unscrew 4 screws on the top, 4 magnets are at the bottom（The quantity varies depending on the size of the unit） and take off the trim. (NOTE: Keep hold of the front glass as it may fall down automatically when the trim is removed.)

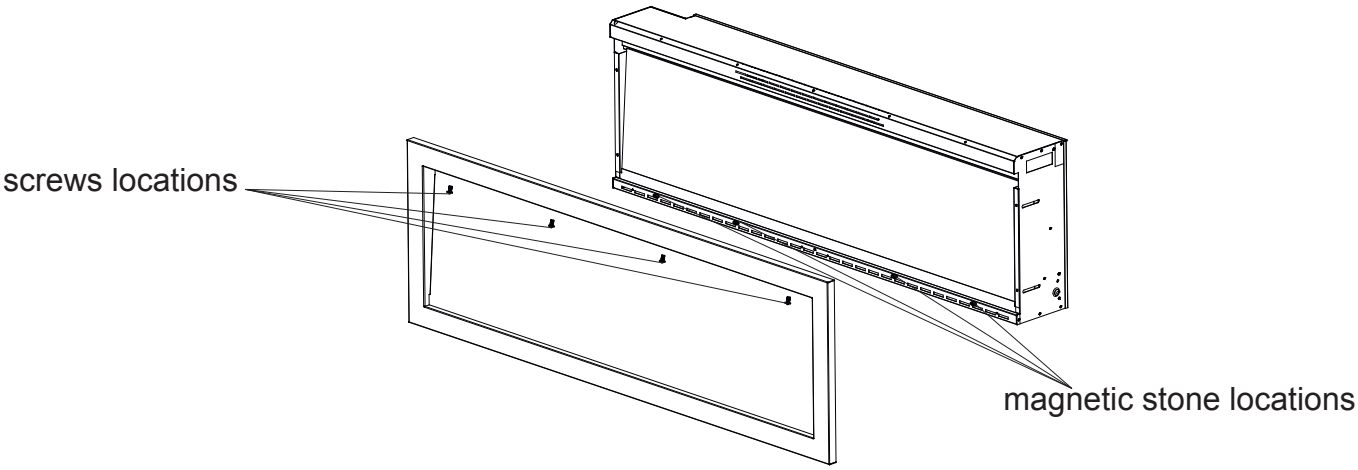

2. When the trim is removed , take off the front glass panel. The Front glass is loose, be careful when taking the glass off.

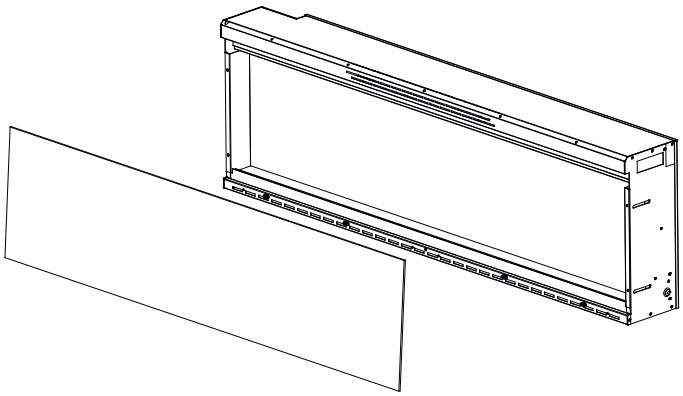

3. Unscrew the 2 screws located on each side and take off the inner side steel panels.

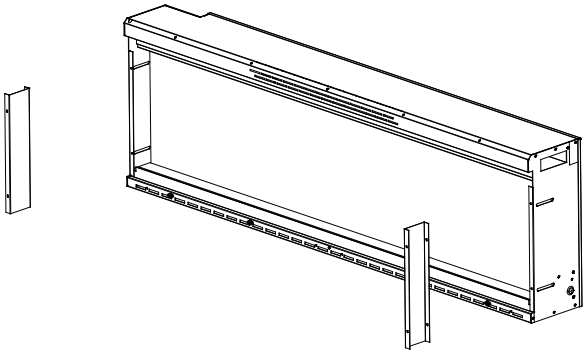

4. Put the trim back onto the appliance and fasten with screws.(NOTE: This step is to make sure that the fireplace fits the wall opening well and there is no gap between the trim and the wall after installation)

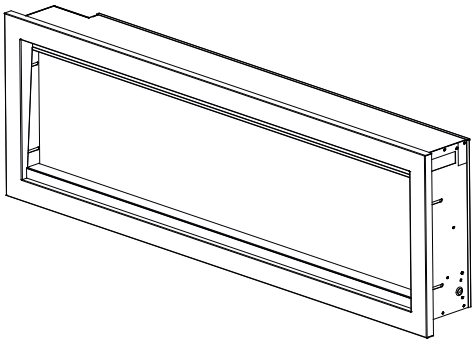

5. Put the fireplace into the wall opening and fix it to the wall by screwing 2 screws each side.

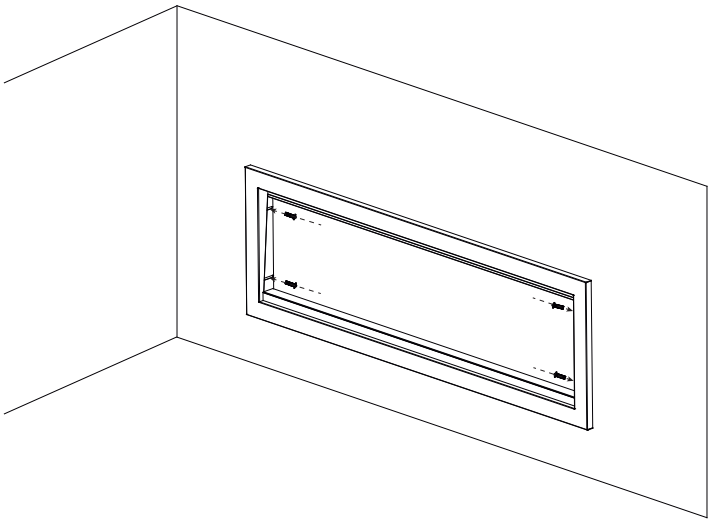

6. Remove the trim following STEP 1. Screw back the inner side steel panels.

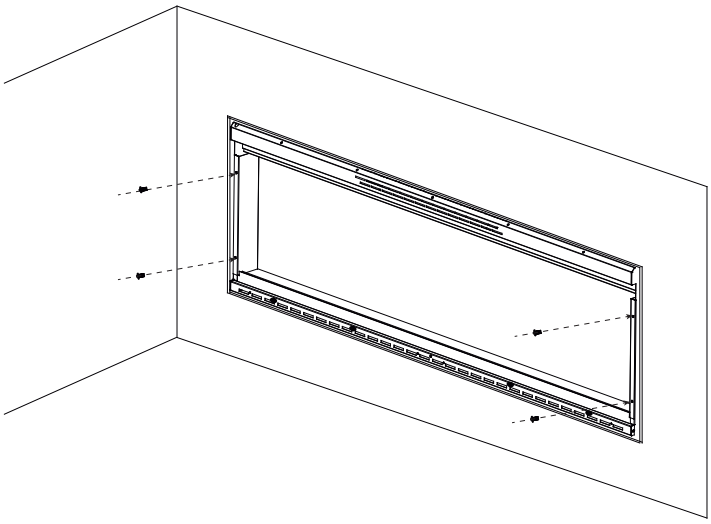

7. Put back the front glass panel and screw back the trim after you finish the media decoration.

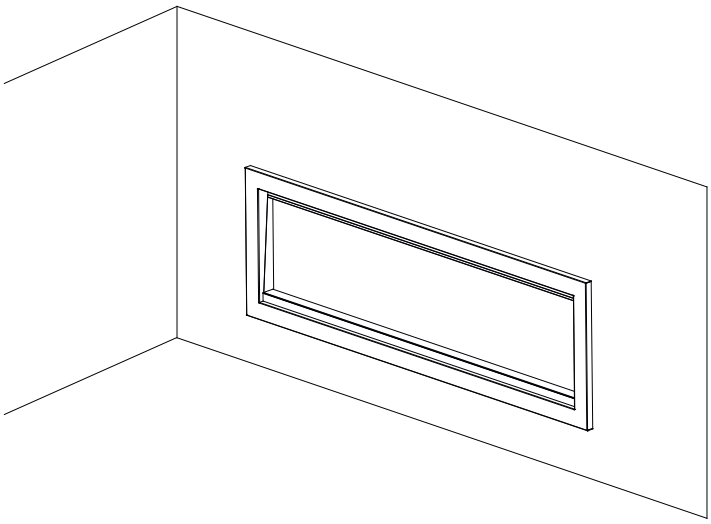

HARD- WIRE INSTALLATION

Turn off the appliance completely and let cool before servicing. Only a qualified service person should service and repair this electric appliance.

If it is necessary to hard-wire this appliance, a qualified electrician must remove the cord connection, and wire the appliance directly to the house hold wiring.

This appliance must be electrically connected and grounded in accordance with local codes, if hard-wired. In the absence of local codes, use the current CSA C22.1 CANADIAN ELECTRICAL CODE in Canada or the current ANSI/NFPA 70 NATIONAL ELECTRICAL CODE in the United States.

1. Test the unit before removing the cord.

Remove the cover plate from the back top right corner of the appliance by removing the four screws, as shown below. Unscrew and remove power cord.

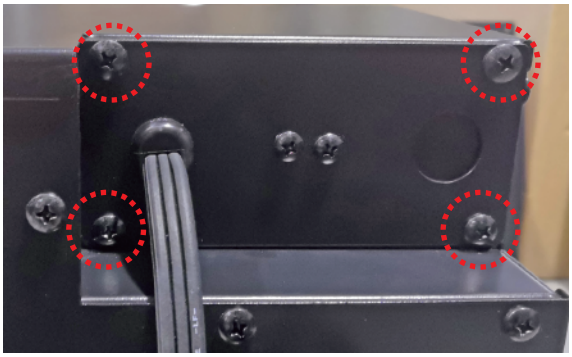

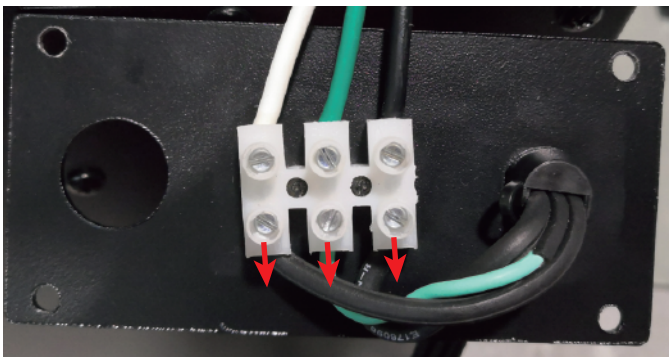

2. Attach the wiring to the junction block. Please make sure the live wire goes into the “L”, the neutral wire into “N” and the ground wire into “G”.

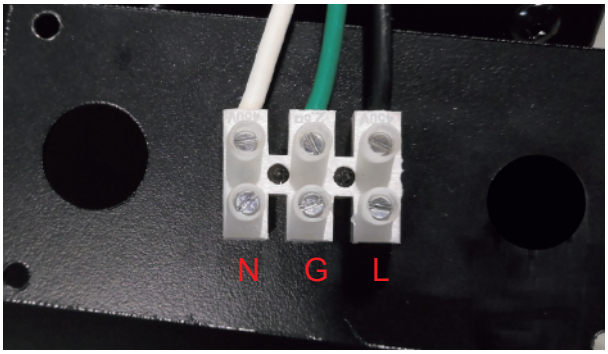

3. Return the cover plate to the back top right corner and screw the four screws back in to fasten the plate.

DECORATIVE MEDIA INSTALLATION

Consumers may purchase optional decorative media if they choose. See dealer for more details.

1. Unscrew 4 screws （Tthe quantity varies depending on the size of the unit） and take off the trim. (NOTE: Keep hold of the front glass as it may fall down automatically when the trim is removed.)

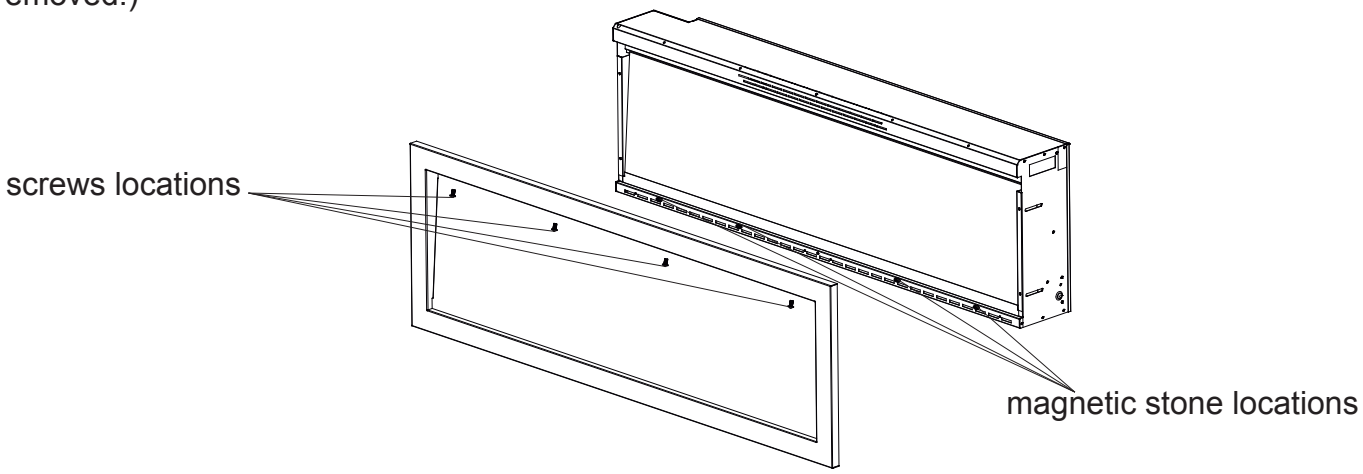

2. When the trim is removed , take off the front glass panel.

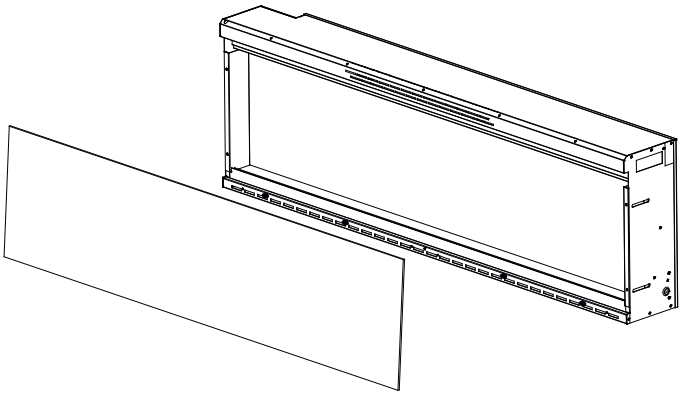

3. Pour the media into the tray. Feel free to use any combination of the fire glass media that you find most appealing. Put back the trim and front glass after you finish installing the media.

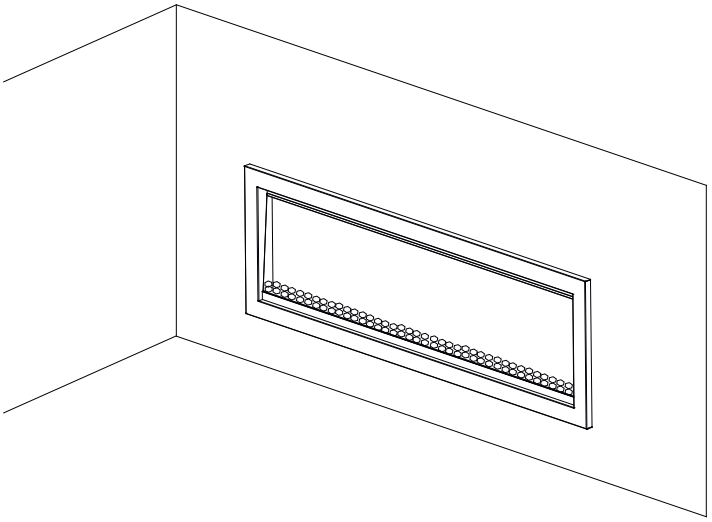

MANUAL OPERATION

The fireplace can be operated either by the touch panel located on the left front top side of the fireplace or by supplied remote control.

Ensure that the ON / OFF Power Switch on the fireplace is in the ON position.

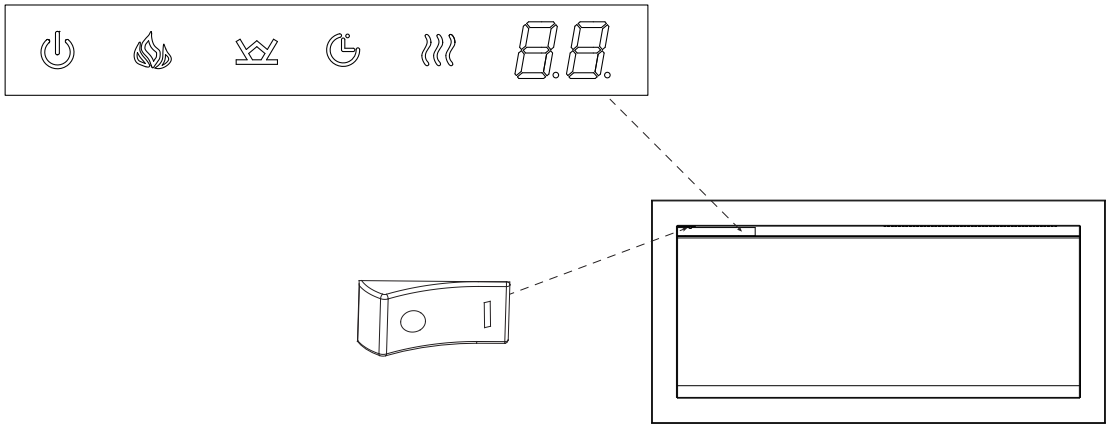

Touch the control panel once to “wake up” the controls. This will cause the controls to light up. At this time, you can press the power button to turn on fireplace

1. Press “ ⏻ ” to turn on and off the fireplace.

2. Press “ 🔥 ” to adjust the flame brightness. There are 6 brightness levels（L6-L1）and an off(OF) position. Each time the flame button is pressed, the brightness of the flame decrease.

press the flame button for 5 seconds, the timer indicator light on and will rapidly blinks, at this time, You can use the TuyaSmart APP to connect to the fireplace.

3. Press “ ” to adjust the ember bed brightness. There are 7 brightness levels (d8-d2), dynamic condition(d1) ,and the OFF(OF) setting you can cycle through. Each time the ember bed button is pressed, the brightness of the ember bed decrease.

4. Press “ ” for the first time to display the current timing， press the button again to clear the current timing. If the timing in off position, the second press will show 30. Multiple times to set operating duration to OF, 30 min, 1h, 2h, 3h, 4h, 5h, 6h, 7h, 8h.

Press and hold the “ ” for 5 seconds to turn on the sound.

5. Press “ ” for the first time to display the current setting temperature， press the button again to clear the current temperature. If the heater in off position, the second press will show22℃(72℉). Multiple times to set ambient temperatures at 22℃(72℉), 23℃(74℉),24℃(76℉), 25℃(78℉), 26℃(80℉), 27℃(82℉), 28℃(83℉),15℃(59℉), 16℃(60℉), 17℃(62℉),18℃(64℉), 19℃(66℉), 20℃(68℉), 21℃(70℉).

Temperature unit convert function: When the heater is on, press and hold the“ ” Button for 5 seconds, current temperature unit display will convert to another temperature unit.

NOTE:The heater is turned on by switching on the fan first, then after 5 seconds the heating coil. The heater is turned off by switching off the heating coil first, then after 60 seconds the fan.

REMOTE CONTROL OPERATION

For remote to function make sure the fireplace is plugged in and the ON / OFF Power Switch on the fireplace is in the ON position and the remote has batteries.

Important: When operating the remote make sure you point the remote to the center of the fireplace. Each time you press the button, there will be a beep tone emitted.

Setting the current time of the remote control

You must press the key to open the remote control and press the SET key to enter the setting current time state. When one of the “Sun”“ Mon”“Tue”“Wed”“Thu”“Fri”“Sat” date is flashing, you can press the ▷ or ◁ key to select the current day of the week, and press the SET key to confirm and enter hour setting. When the digital tube of time hour flashes, press the △ or ▽ key to set the current time and press the SET key to confirm and enter minute setting. When the digital tube of time minute flashes, press the △ or ▽ key to set the current time and press the key to confirm.

This Power Button turn the fireplace on and off. It has a memory function, press the power button once to turn power on. Pressing the power button again will turn the power off.

The Timer Button has adjustable setting at range from 30 minutes to 8 hours. As shown the following: 0:30- 1:00- 1:30- 2:00- 2:30- 3:00- 3:30- 4:00- 4:30- 5:00- 5:30- 6:00- 6:30- 7:00-7 :30- 8:00. Once you have set the timer, The icon will be displayed on the LCD screen of the remote control. Press this button again, cancel the timing setting, and the icon disappears.

When the timer is up, it will close all the functions and enter standby mode. In this mode, you should touch the power icon to restart the appliance.

Each time the Heater Button is pressed, the power of the heater will change. As shown the following: H1- H2- AUTO(22℃)- OFF(no display).

H1 means the firepalce on Low Heat.

H2 means the fireplace on high heat.

AUTO means fireplace can automatically adjust to the temperature you set. When in AUTO, you can set the desired temperature with △ or ▽ keys. You can switch temperature unit between Celsius and Fahrenheit with ▷ or ◁ keys.

Speed

Each time Speed Button is pressed, the speed of the flame will change. Three options are available: Medium- High- Low.

Moodlight

The Moodlight Button turn the moodlight on and off. When in on position, the display screen of the remote control shows AD 1, when the number “1” flash, you can set the color of moodlight with △ or ▽ keys. There are 10 different moodlight colors(AD1-10) and dynamic condition(AD11) to choose from.

ON/OFF

The Ember Bed Button turn the Ember bed light on and off. When in on position, the display screen of the remote control default shows 8 8 8. You can press R or G or B keys to change the corresponding color.

R

Each time the Red Button is pressed the brightness of the red color decrease. There are 7 brightness levels (8-2), dynamic level(1) and OFF (no display) settings that can be cycled through. When no number is displayed on the remote control LCD screen then the ember bed color is off.

G

Each time the Green Button is pressed the brightness of the green color decrease. There are 7 brightness levels (8-2), dynamic level(1) and OFF (no display) settings that can be cycled through. When no number is displayed on the remote control LCD screen then the ember bed color is off.

B

Each time the Blue Button is pressed the brightness of the blue color decrease. There are 7 brightness levels (8-2), dynamic level(1) and OFF (no display) settings that can be cycled through. When no number is displayed on the remote control LCD screen then the ember bed color is off.

ON/OFF

The Flame Button turn the Flame on and off. When in on position, the LCD screen of the remote control default shows 6 6 6. You can press R or O or Y key to change the corresponding color.

R

Each time the Red Button is pressed the brightness of the red color decrease. There are 6 brightness levels (6-1) and OFF (no display) settings that can be cycled through. When no number is displayed on the remote control LCD screen then the flame color is off.

O

Each time the Orange Button is pressed the brightness of the orange color decrease. There are 6 brightness levels (6-1) and OFF (no display) settings that can be cycled through. When no number is displayed on the remote control LCD screen then the flame color is off.

Y

Each time the Yellow Button is pressed the brightness of the yellow color decrease. There are 6 brightness levels (6-1) and OFF (no display) settings that can be cycled through. When no number is displayed on the remote control LCD screen then the flame color is off.

7 day timer function

NOTE: Ensure that the clock has been set correctly first, otherwise timer will not work.

Press key once, 7 days from Monday to Sunday will display on the LCD screen of the remote control, press SET key within 5 seconds to enter 7 day timer function . When “Sun” is flashing use the ▷ or ◁ key to select the day that you want to set, pressing SET key to confirm. Then “ON” will be display on the LCD screen of the remote control, at the same time, digital tube of time hour flashes, press the △ or ▽ key to set the time to turn the fireplace on. After setting the startup time, “OFF” will be displayed on the LCD screen. Also use the △ or ▽ key to set the shutdown time. After setting the shutdown time, “AUTO” will be display on the LCD screen of the remote control, and digital tube of temperature flashes. At this time, you can set the desired temperature with △ or ▽ keys, or press the key to choose low heat (H1) or high heat(H2). Now, the time to turn on and off is set.

When the 7 day timer is set, the icon will be displayed on the LCD screen of the remote control. Then press the key again to cancel the 7 day timer and the icon will disappears.

NOTE: If the 7 day timing and general timing exist at the same time, the shutdown time shall be the earlier time. For example, it is now 6am on tuesday, turn on the heater and set the shutdown time after 4 hours (i.e. 10 am), while the previous 7 day shutdown time is 8 am on tuesday, so today's heater shutdown time is 8 am instead of 10 am.

The Refer Button turn on or off query 7-day timer setting. Query only, not change. Press the ▷ or ◁ key to query the timing status of the day of the week. Press the △ or ▽ key to query the startup time and shutdown time.

Press ® key once to enter the query state, press ® key again to exit the query statu.

This button turns sound on or off.

TROUBLE SHOOTING

Fault code	Fault Cause	Solution
E1	The heater overheating	Call after-sales service.
E2	NTC is defective.	Call after-sales service.
E3	The heater not working.	If the vents are dirty or clogged. Unplug the power, clean the dust and debris of the vent area. Wait for 5 minutes, plug in and turn on the heater. If the heater still don't work, please call after-sales service.

Each time the heater button is pressed in the E1 state, one beep tone will be given.
Each time the heater button is pressed in the E2 state, two beeps tone will be given.
Each time the heater button is pressed in the E3 state, three beeps tone will be given.

REPLACEMENT PARTS

NO.	DESCRIPTION	PART NUMBER				QTY
		BS1900034-1 (SYM-34 BESPOKE)	BS1900042-1 (SYM-42 BESPOKE)	BS1900050-1 (SYM-50 BESPOKE)	BS1900060-1 (SYM-60 BESPOKE)	
1	FRONT GLASS	60000187	60000193	60000190	60000196	1
2	EMBER BED GLASS	60000189	60000195	60000192	60000198	1
3	FLAME EFFECT GLASS	60000188	60000194	60000191	60000197	1
4	LED STRIP FOR EMBER BED	30001812 30001961	30001859	30001812 30001859	30001961 30001859	1
5	LED STRIP FOR FLAME	30001981	30001981 30002008	30002056	30002059	1
6	PCB BOARD	30001984	30001984	30001984	30001984	1
7	MOTOR	30001868	30001868	30001868	30001868	1
8	AC ADAPTER	30001978	30001978	30001978	30001978	1
9	BLOWER AND HEATER ASSEMBLY	30002019	30002019	30002019	30002019	1
10	LED STRIP FOR TOP LIGHT	30001982	30002012	30002010	30002013	1

REPLACEMENT PARTS

NO.	DESCRIPTION	PART NUMBER			QTY
		BS1900074-1 (SYM-74 BESPOKE)	BS1900088-1 (SYM-88 BESPOKE)	BS1900100-1 (SYM-100 BESPOKE)	
1	FRONT GLASS	60000199	60000202	60000205	1
2	EMBER BED GLASS	60000201	60000204	60000207	1
3	FLAME EFFECT GLASS	60000200	60000203	60000206	1
4	LED STRIP FOR EMBER BED	30001859 30001961	30001812 30001961 30001959	30001812 30001961 30001959	1
5	LED STRIP FOR FLAME	30002059	30001981	30001981	1
6	PCB BOARD	30001984	30001984	30001984	1
7	MOTOR	30001868	30001868	30001868	1
8	AC ADAPTER	30001978	30001978	30001978	1
9	BLOWER AND HEATER ASSEMBLY	30002019	30002019	30002019	1
10	LED STRIP FOR TOP LIGHT	30002020	30002021	30002022	1
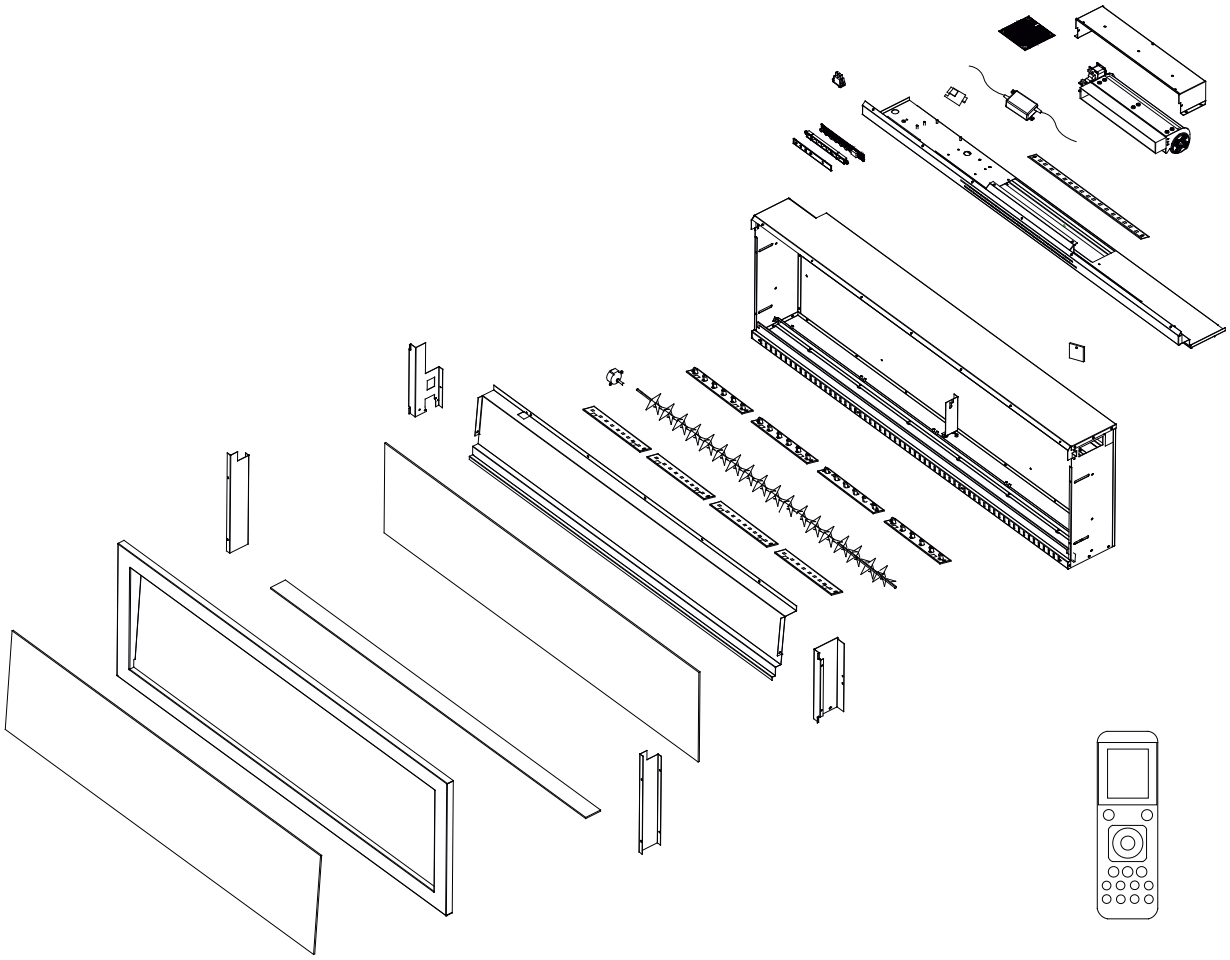
EXPLODED VIEW