CUSTOMER : Standard

DATE : 2023. 04. 21

PRODUCT SPECIFICATION

TWZT-T009D-H

Model	Part Number	Customer P/N
ZIGBEE MODULE	TWZT-T009D-H	-

APPROVAL	REMARK	APPENDIX

DESIGNED	CHECKED	APPROVED
2018.11.01	2018.11.01	2018.11.01
H.S. KIM	J.Y. Choi	S HUH

ATEC IoT

에이텍아이오티

Revision History

Revision	Date	Contents of Revision Change	Remark
0.1	2018.03.16	Initial Release	H.S. Kim
0.2	2018.07.11	Label Information Updated	H.S. Kim
		Firmware version Updated	H.S. Kim
0.3	2018.11.01	양산 Firmware version Updated	H.S. Kim
2.0	‘23.04.01	Changing format for AECT IoT	J.S.YEON
2.1	‘23.04.21	Add Certification	J.B. Kim
2.2	“23.04.24	Changing Label Specification	J.B. Kim

TABLE OF CONTENTS

1. Application 3/20
2. Quality 3/20
3. Appearance and Characteristics 3/20
4. Overall Service Scenario 4/20
5. General Features 5/20
6. Absolute Maximum Rating 7/20
7. Electrical Specification 8/20
8. Mechanical Information 12/20
9. User Quick Manual 14/20
10. Packaging 15/20
11. Disclaimers 19/20
12. Certification 20/20

1. Application

This Specification is applied to ATEC IoT Zigbee Module (TWZT-T009D-H).
TWZT-T009D-H is Common Zigbee Module solution for IEEE 802.15.4(6LoWPAN) applications. The robust network with PA(Power Amplifier) and diverse interface(SPI, UART, I2C) make it possible to be used as various kinds of applications. Specially, it is suitable for Gen2 Gateway and RTLS Anchor.
TWZT-T009D-H is composed of RF IC and necessary external component include the Dipole Ant.

2. Quality

Quality should meet each condition which mentioned on this specification. However, the items which are not mentioned on this specification follow the inspection agreements and standards which are agree with both companies.

3. Appearance and Characteristics

3.1. Appearance

Appearance should not be contaminated by harmful materials and should not have cracks, etc. Mechanical dimensions should meet the contents of clause 8.

3.2. Characteristic

Electrical Characteristics should meet the contents of clause 7.

4. Overall Service Scenario

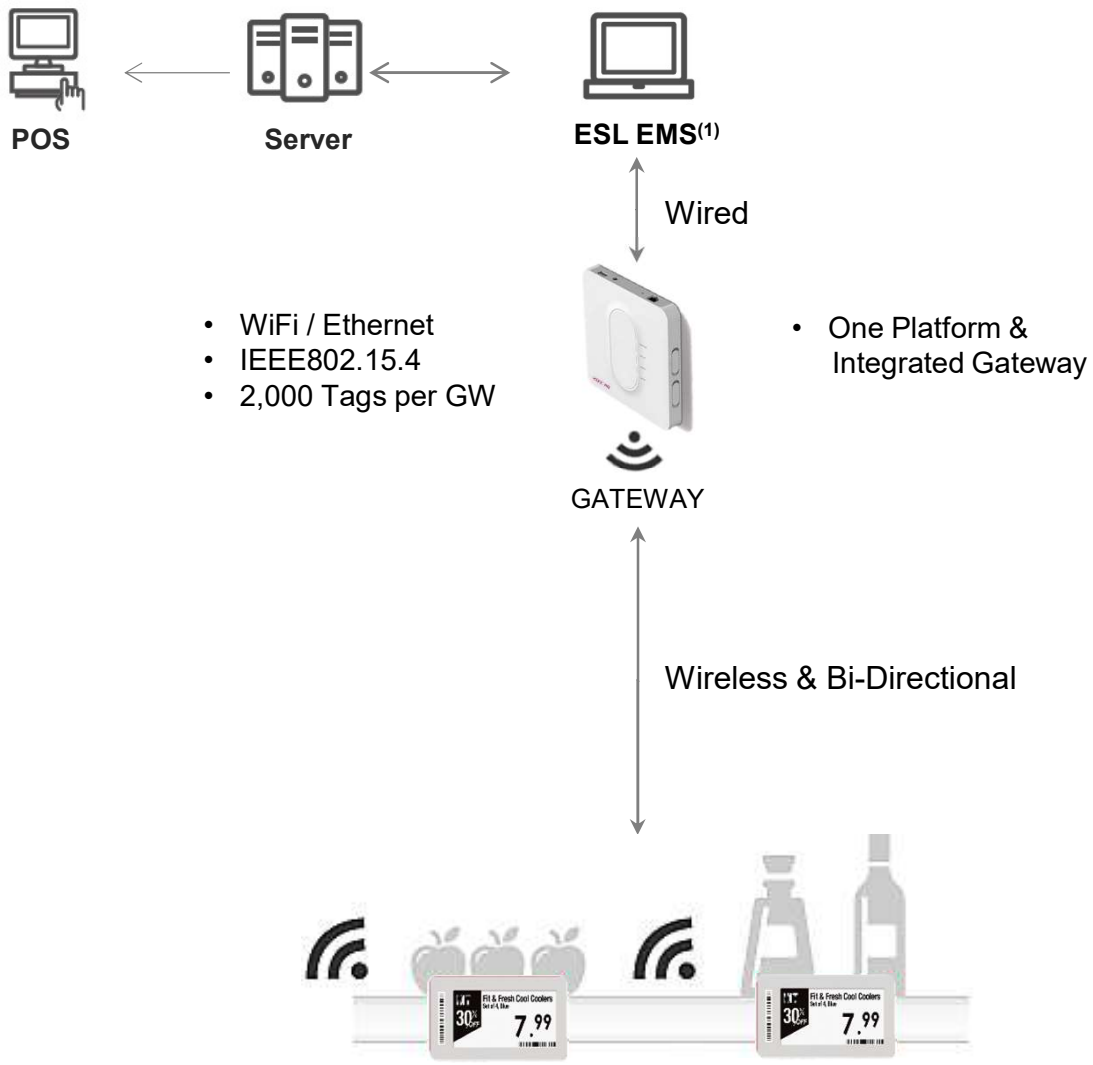

2.4GHz Wireless Tags

(Battery / Power Line)

(1) EMS : ESL Management Software

5. General Features

5.1. Description

Item		Description
Size		36.0 x 28.0 x 10.0(mm)
Weight		Typ. 5g
Memory		Internal Flash : 128KB External Flash : 1MB SRAM : 20KB
Power		Operating Voltage : Typ. 3.3V (2.3V~3.6V)
RF	Tx Power	Max.10dBm
	Data Rate	250kbps
	Antenna	PCB Pattern Antenna
Network	20pin Interface	UART for FW Downloading SPI for Communication
	Wireless	2.4GHz IEEE802.15.4 compliant RF Transceiver Range Extender (PA/LNA)
	Security	Robust wireless network (LGIT own protocol)
	Protocol	Compatible with LGIT protocol communication devices
	Comm. Range	Max. 30m (under LoS) (1)

(1) LoS (Line of Sight) : Without any sort of an obstacle between a gateway and end devices

6. Absolute Maximum Rating

6.1. Environmental Conditions

The normal operating environmental conditions are those as below. In such conditions, ESL must be in conformity with the present specification. The conformity to such requirement must be certified by the manufacturer.

Parameter	Condition	Min.	Typ.	Max.	Unit
Operating Environment	Temperature	-20	-	85	℃
	Humidity	-	35	80	%RH
Storage Environment	Temperature	-30	-	85	℃
	Humidity	-	35	80	%RH

[Notice]

*** TWZT-T009D-H is design to be used indoor/Ceiling. It does not guarantee outdoor conditions.**

6.2. Electrical Conditions

The operating electrical conditions are those as below. In such conditions the ESL must be in conformity with the present specification. All devices can be damaged or non-operated over the specification as below. The conformity to such requirement must be certified by the manufacturer.

Parameter	Condition	Min	Typ.	Max	Unit
Supply Voltage	DC Power Supply	2.3	3.3	3.6	V
Power Consumption	@ 3.0~3.3V (Active Tx)	-	-	200	mA
	@ 3.0~3.3V(Active Rx)	-	-	15	mA
ESD Protection	HBM(150pF/330Ω) (1) Air Condition @Soft Fail	-2	-	+2	kV

[Notice]

(1) TWZT-T009D-H is ESD sensitive device. Precaution should be used when handling the device in order to prevent permanent damage.

7. Electrical Specification

7.1. IEEE802.15.4

The TWZT-T009D-H supports IEEE802.15.4.

7.2. General Specification

- Standard : Only IEEE802.15.4 PHY
- Frequency : 2405 ~ 2480MHz
- Channel : 16CH. (5MHz Spacing)
- Modulation : DSSS/O-QPSK
- Max. Data Rate : 250Kbps

7.3. Electrical Specification

- Channel power depend on each country regulations (EX. KC, etc)
- The electrical specification which is shown below is ATEC IoT internal specification.
- All values depend on surrounding environment and current statement of access point

RF Performance					
Parameter	Condition	Min	Typ	Max	Unit
Output Power	@ CH2440	-	-	10	dBm
Receiver Sensitivity	PER=1%(Required -85)	-	-92	-85	dBm
Frequency Tolerance	Required Max. ±75kHz	-75	-	75	kHz
Error Vector Magnitude	Required Max. 35%	-	-	35	%

7.4. Antenna Performance

7.4.1 Antenna

The TWZT-T009D-1 uses PCB pattern antenna for 2.4GHz frequency band.

VSWR

TEST METHOD	TEST DATA
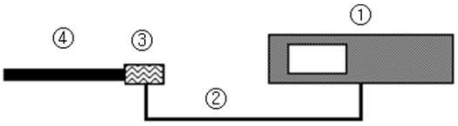 ①. Network Analyzer ②. Signal Interface : Coaxial Cable ③. SMA Connector ④. Test PCB Antenna	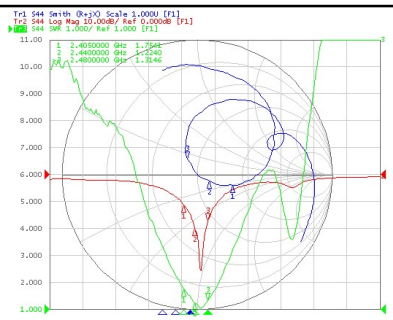

Radiation Pattern and Gain

TEST METHOD

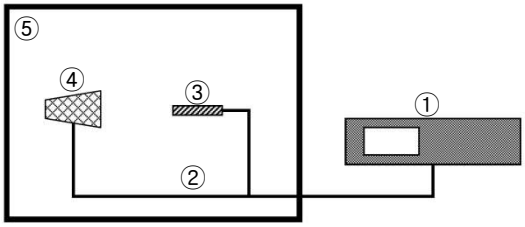

① Network Analyzer
② Signal Interface : Coaxial Cable
③ Test PCB Antenna
④ Dual Polarized Antenna
⑤ Shield Room

Radiation Pattern

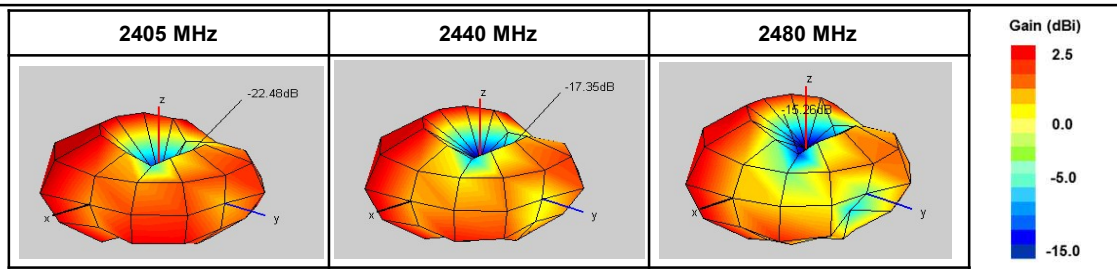

Efficiency

Frequency(MHz)	2405	2440	2480
Efficiency(dB)	-2.11	-1.5	-2.17
Efficiency(%)	61.50	70.72	60.68
Peak Gain(dB)	1.8	2.53	1.94

[Notice]

*** This data is measured when TWZT-T009D-H is connected to the 4th Slot of Gen2 Gateway Board. Gen2 Gateway has 7 slots for diverse modules. The 4th Slot is the middle slot of whole 7 slots of it.**

7.5. Antenna Performance

7.5.1 Gen2 Gateway Slot Information

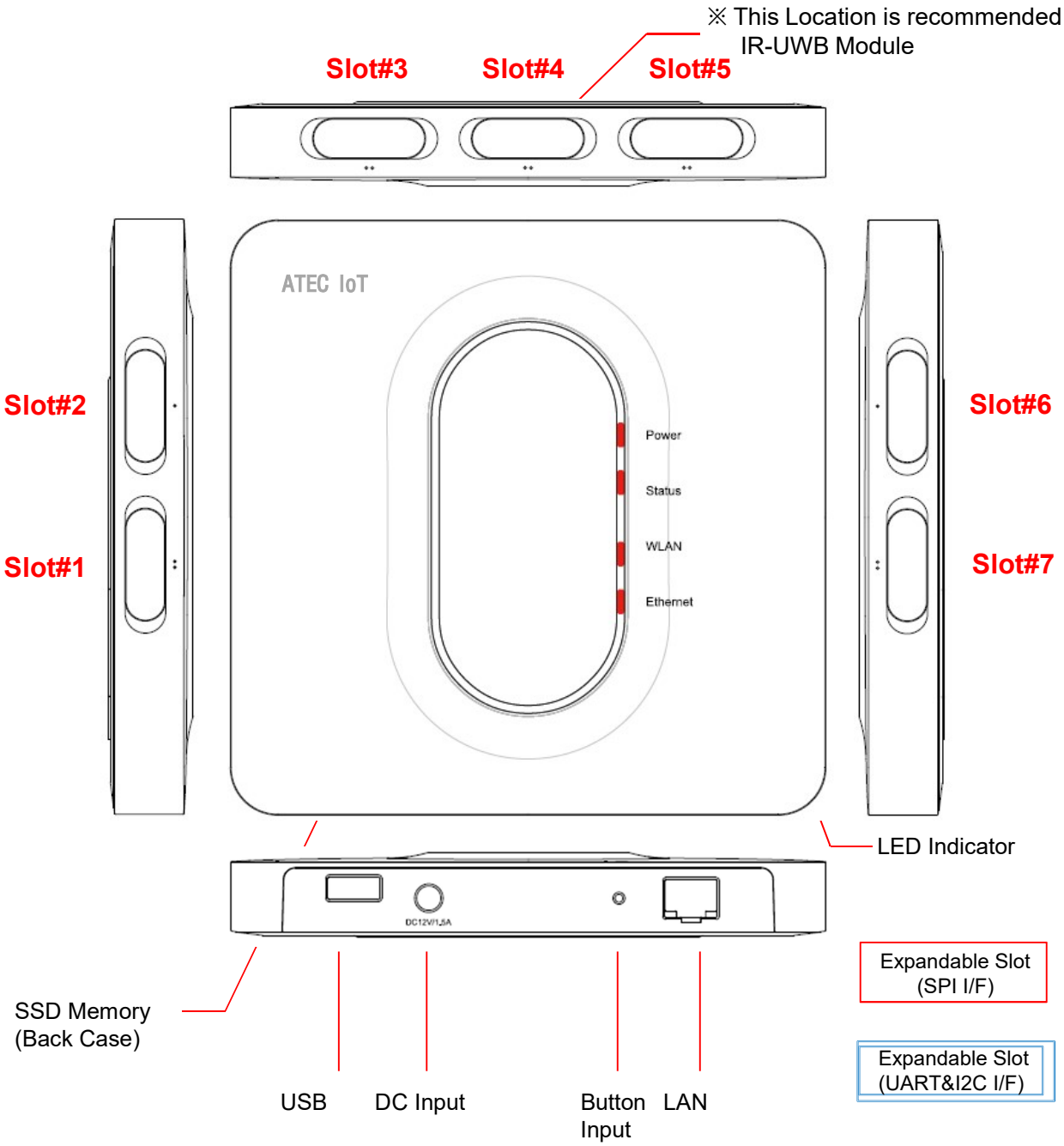

7.6. Interface Information

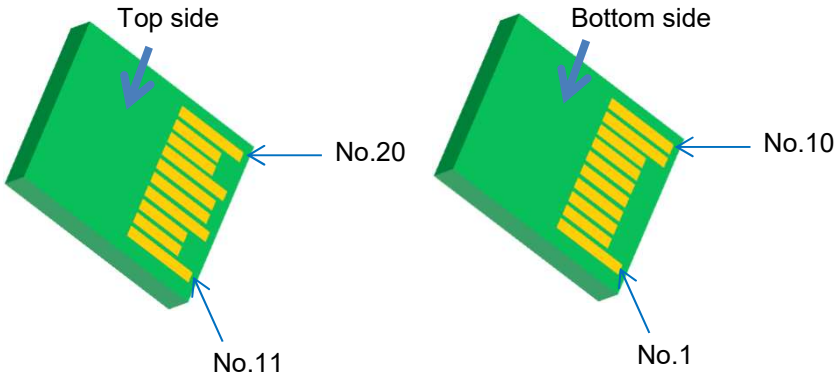

#	Name	I/O	Description
1	GND	G	Common ground
2	SPI_CS	O	Enable input for SPI interface
3	SPI_MISO	I	SPI data input
4	WAKE UP	O	wake up signal
5	UART_TX	I	NC
6	UART_RX	O	NC
7	VDD	P	3.3V external DC supply
8	VDD	P	3.3V external DC supply
9	GND	G	Common ground
10	GND	G	Common ground
11	GND	G	Common ground
12	NC	-	NC
13	TEST_PIN	O	Firmware Download Enable Pin
14	GND	G	Common ground
15	RESET	I	Reset input/output(active low)
16	IRQ	I	Interrupt output to the host processor
17	GND	G	Common ground
18	SPI_CLK	I	SPI interface clock
19	SPI_MOSI	O	SPI data input
20	GND	G	Common ground

8. Mechanical Information

8.1. Mechanical Dimension

Size	28.0 x 36.3 x 9.8 (mm)
Weight	Typ. 5.1 g

Unit : mm

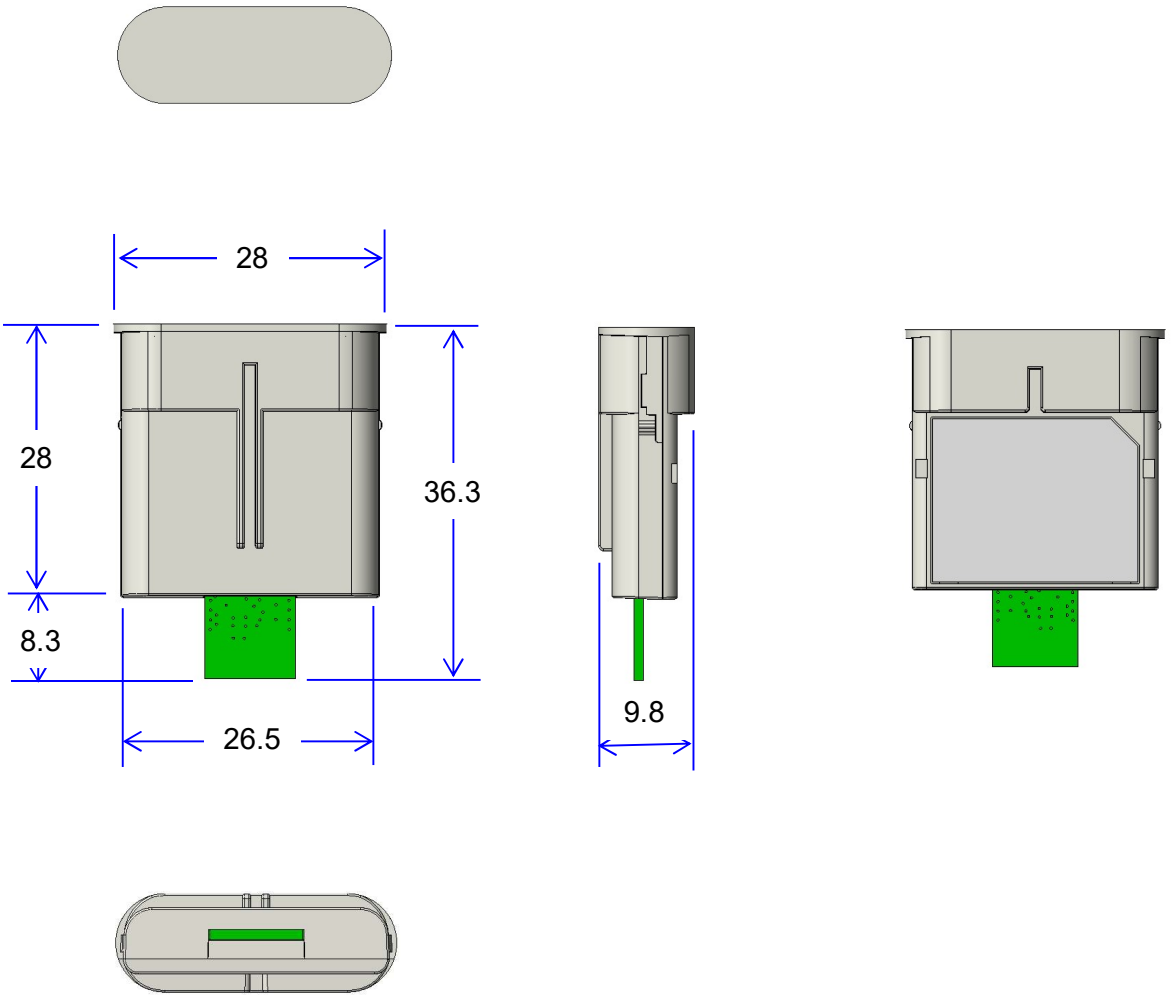

8.2. Assembly

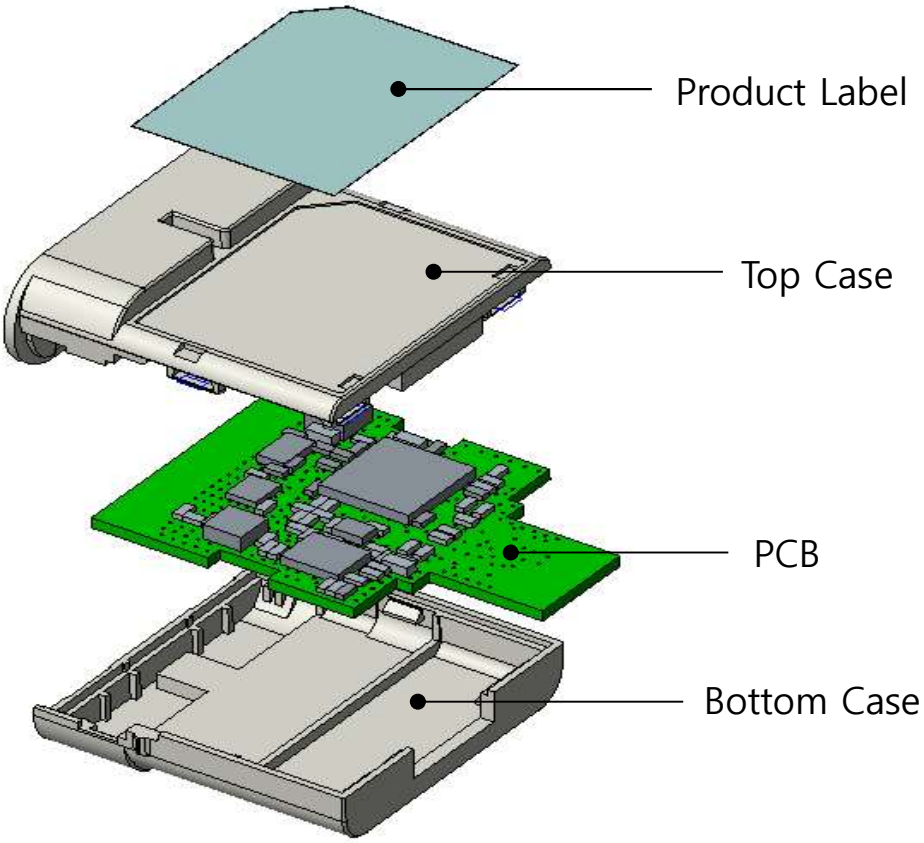

8.3. Label Specification

8.3.1. Product Labeling Specification

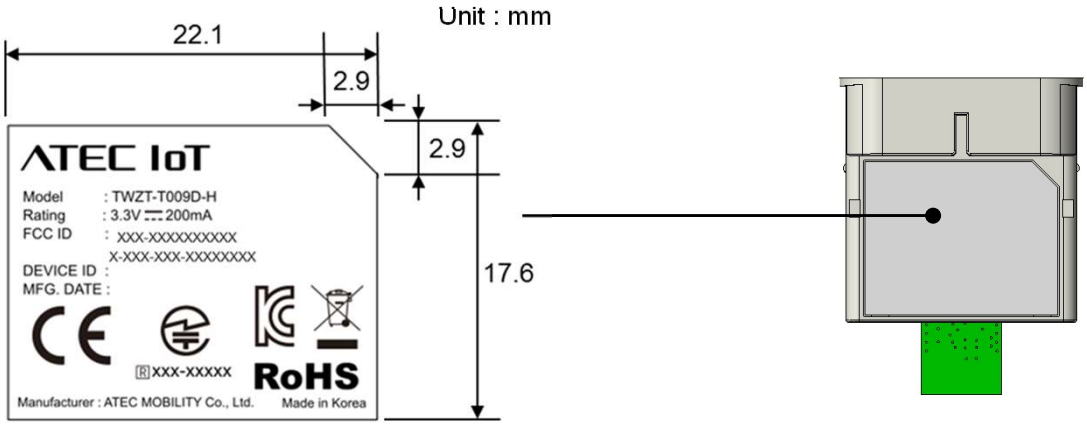

9. User Quick Manual

9.1. Zigbee Module User Manual

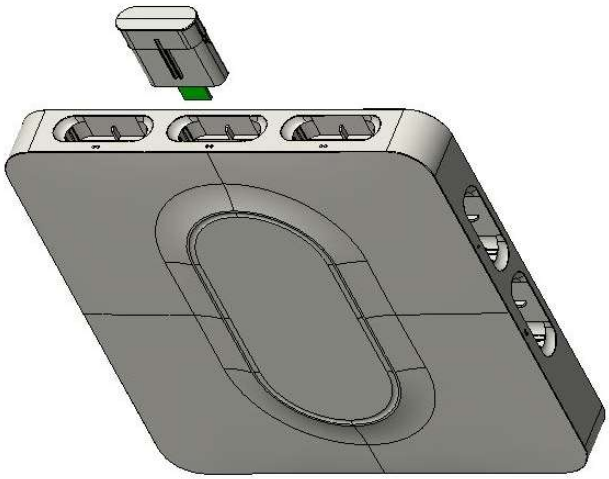

Zigbee Module is suitable for Gen2 Gateway.
5 Slots of Gen2 Gateway can be used for Zigbee.
To fulfill the ESL System, at least 2 Zigbee Modules should be inserted to the Gateway.

Likewise this picture, when you inserting modules, be careful with the directions. Modules will not be able to be putted in when the inserting direction is opposite.

9. 2. LED Alarming

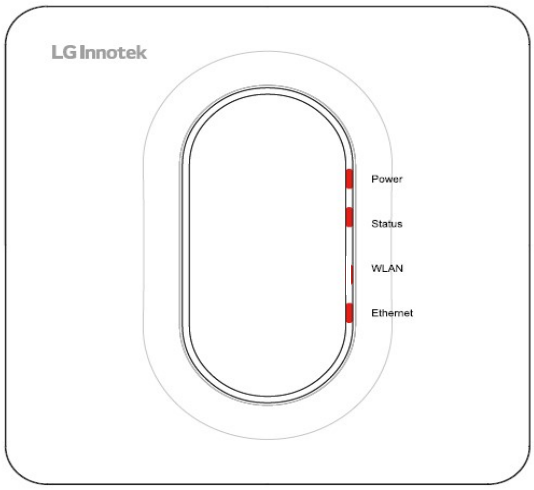

When Modules are working abnormally, three LEDs(Power, Status, Ethernet) would blink to alarm the unusual state.
※ The abnormal phenomenon could happen when you forced pull out the modules or module malfunctions.

10. Packaging

10.1. Gift Box

No.	Item	Q'ty (EA)	Spec.
1	PE bag	1	1EA per 1 Gift Box, 100EA per 1 Carton
2	ZIGBEE Module	1	Size (WxDxH): 28.0 x 36.3 x 9.8 (mm)
3	Gift Box	1	1. Material : SC400 2. Size (WxDxHxt) : 52 x 15 x 142.5 x 0.5t mm
4	Gift Box Label	1	1. Material: PET(White) 2. Size(WxDxt): 50 x 30 x 0.1t

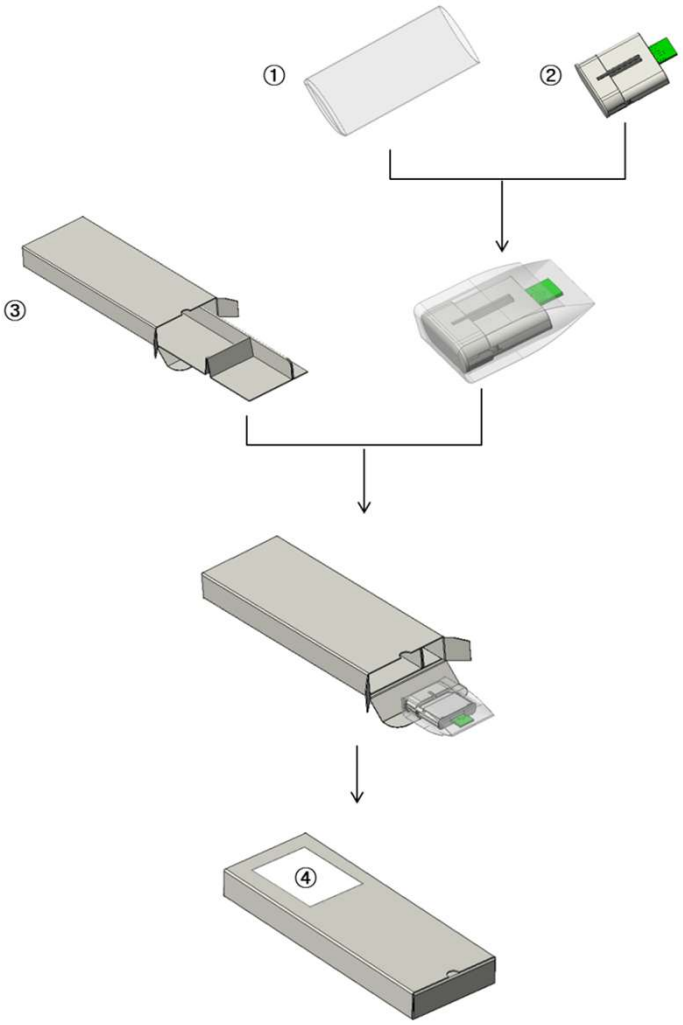

10.2. Outer Box

No.	Item	Q'ty (EA)	Spec.
1	Gift Box	100	1. Material : SC400 2. Size (WxDxHxt) : 52 x 15 x 142.5 x 0.5t mm
2	Certification Paper	1	1. Material: Paper(White) 2. Size: A4 (WxH): 210 X 297
3	Inner Pad	3	1. Material : KLB.K.K/A 2. Size (WxDxt): 415 x 290 x 4t mm
4	Outer box	1	1. Material : KLB.K.K/A 2. Size (WxDxHxt): 420x 295 x 138 x 8t mm

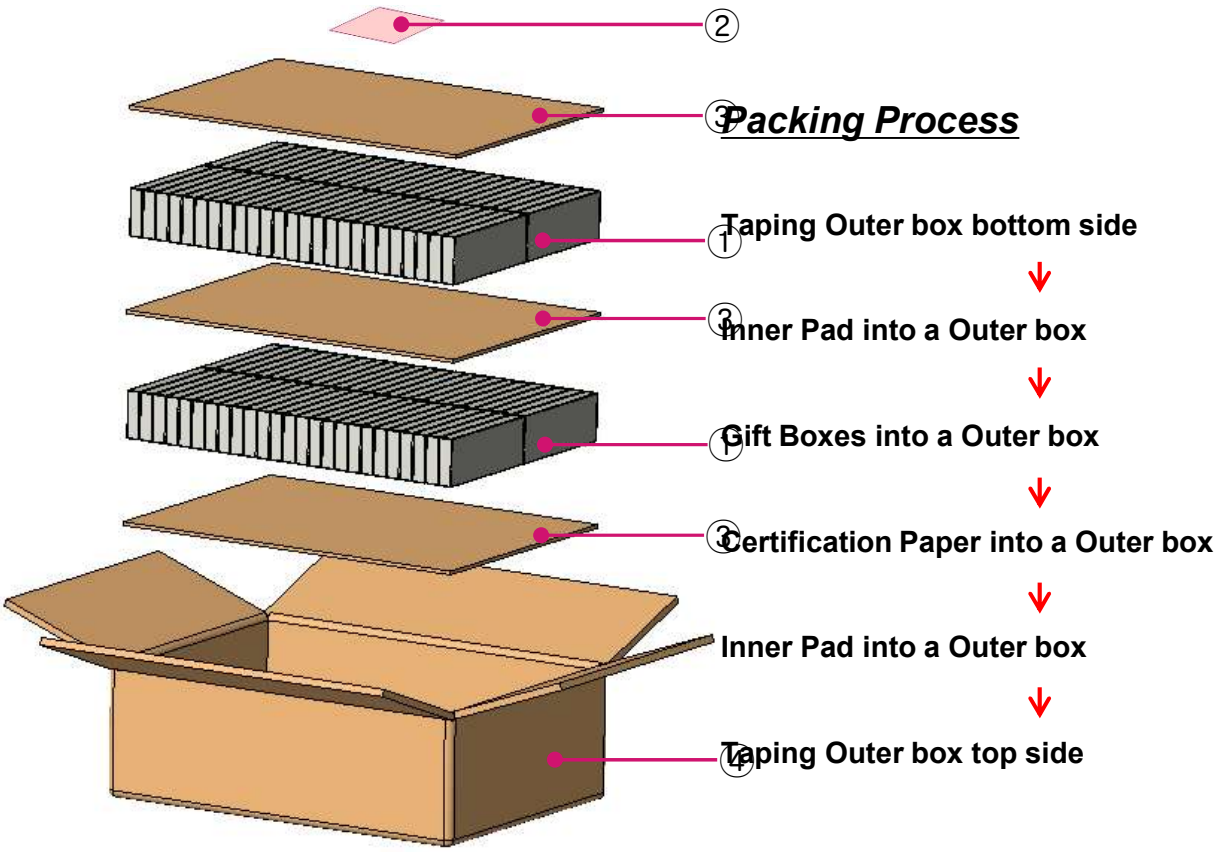

No.	Item	Q'ty (EA)	Spec.
1	Outer box	1	1. Material : KLB.K.K/A 2. Size (WxDxHxt): 420x 295 x 138 x 8t mm
2	Label_Carton	1	1. Material: Art-paper(White) 2. Size(WxDxt): 120x60x0.1t
3	Tape OPP	1	"H" type / 50*50 CLEAR

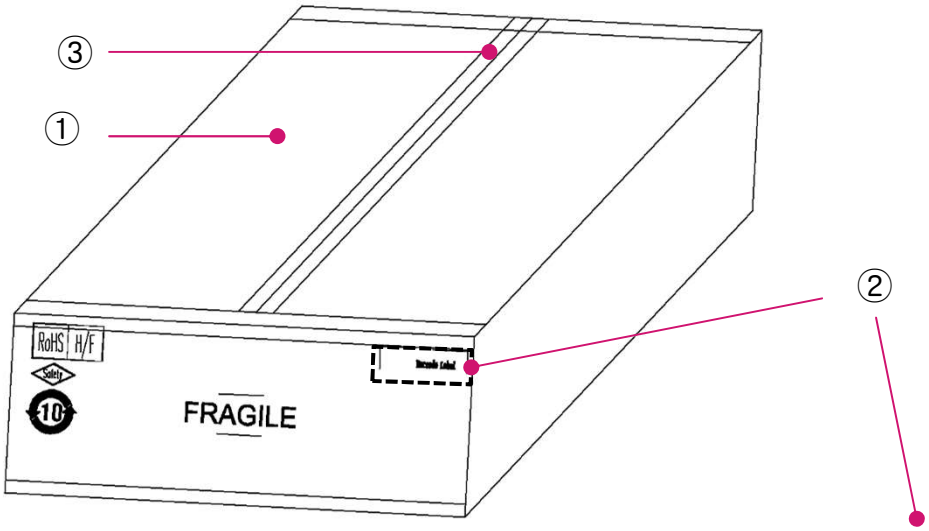

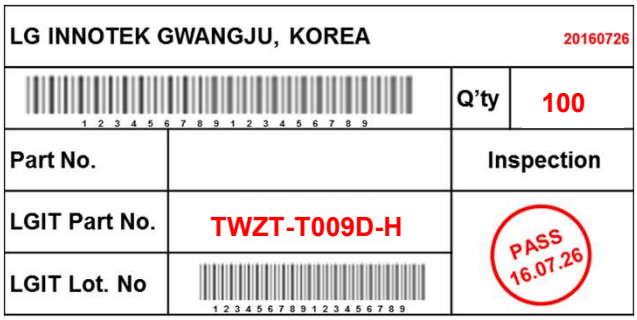

10.3. Pallet Packing

No.	Item	Q'ty (EA)	Spec.
1	PLASTIC-PALLET	1	1. Material : PPC(재생) / BLK 2. Size (WxDxH): 1200 x 1100 x 120mm
2	Cap_Box	1	1. Material : : KLB225.CK.CK.SK.KLB225/BA골 2. Size (WxDxHxt): 1160 x 1010 x 100mm x 8t
3	P.P Band	-	
4	Plastic Wrapping	-	
5	Fragile Label	1	1. Material : Art Paper 2. Size (WxH) : 200 x 120mm

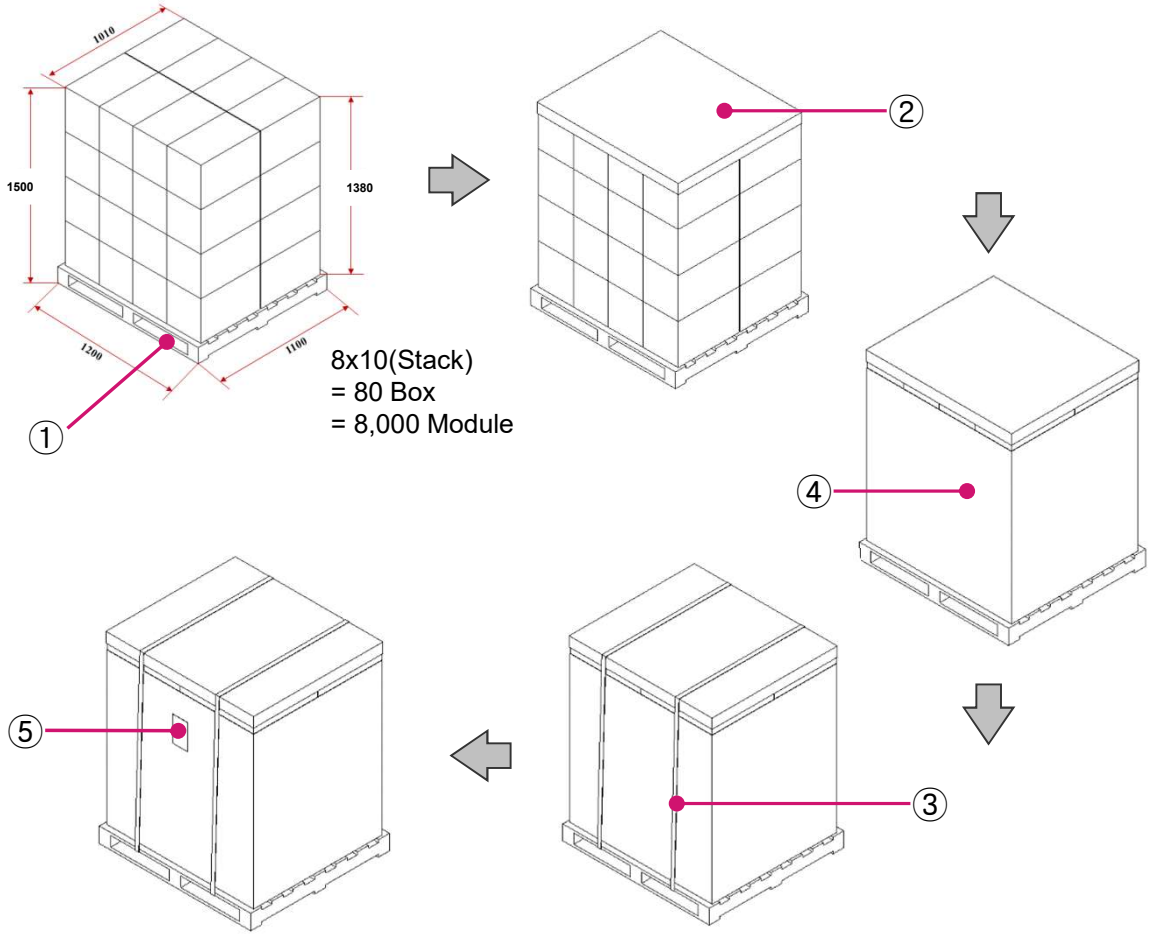

11. Disclaimers

-. *ATEC IoT* is not responsible for any damages caused by any accidents or operational environments exceeding the absolute maximum ratings.

-. Consultation with *ATEC IoT* is recommended for unassured environments or operations to avoid any possible malfunctions or damages of the products or risk of life or health.

-. Any unauthorized, without prior written consents from *ATEC IoT*, disassembly is prohibited if purposed for reverse-engineering. All defected devices must be reported to *ATEC IoT* and not to be disassembled or analyzed.

-. The product information can be modified and upgraded without prior notice.

12. Certification

a. Rule Part 15.19(a)(3): This device complies with part 15 of the FCC Rules. Operation is subject to the following two conditions: (1) This device may not cause harmful interference, and (2) this device must accept any interference received, including interference that may cause undesired operation.

b. Rule Part 15.21: The users manual or instruction manual for an intentional or unintentional radiator shall caution the user that changes or modifications not expressly approved by the party responsible for compliance could void the user's authority to operate the equipment.

Note: This equipment has been tested and found to comply with the limits for a Class B digital

NOTE: This equipment has been tested and found to comply with the limits for a Class B digital device, pursuant to part 15 of the FCC Rules. These limits are designed to provide reasonable protection against harmful interference in a residential installation. This equipment generates, uses and can radiate radio frequency energy and, if not installed and used in accordance with the instructions, may cause harmful interference to radio communications. However, there is no guarantee that interference will not occur in a particular installation. If this equipment does cause harmful interference to radio or television reception, which can be determined by turning the equipment off and on, the user is encouraged to try to correct the interference by one or more of the following measures:

• Reorient or relocate the receiving antenna.

• Increase the separation between the equipment and receiver.

• Connect the equipment into an outlet on a circuit different from that to which the receiver is connected.

• Consult the dealer or an experienced radio/TV technician for help