FCC RADIO TEST REPORT
FCC ID: 2AZKX-PCDOCK

Product: Docking Station
Trade Mark: LANQ
Model No.: PCDock
Family Model: N/A
Report No.: S21012802510004
Issue Date: 19 Mar. 2021

Prepared for

LangqunYunchuang (Shenzhen) Electronics Co., Ltd.

Room 320, B316-321, Bantian Hand-made Culture Street B, Nankeng Community, Bantian Street, Longgang District, Shenzhen China

Prepared by

Shenzhen NTEK Testing Technology Co., Ltd.

1/F, Building E, Fenda Science Park Sanwei, Xixiang, Bao'an District Shenzhen, Guangdong, China

Tel:400-800-6106,0755-2320 0050 / 2320 0090
Website:http://www.ntek.org.cn

TEST RESULT CERTIFICATION

Applicant's name ..... : LangqunYunchuang (Shenzhen) Electronics Co., Ltd.

Address ..... : Room 320, B316-321, Bantian Hand-made Culture Street B, Nankeng Community, Bantian Street, Longgang District, Shenzhen China

Manufacturer's Name..... : LangqunYunchuang (Shenzhen) Electronics Co., Ltd.

Address ..... : Room 320, B316-321, Bantian Hand-made Culture Street B, Nankeng Community, Bantian Street, Longgang District, Shenzhen China

Product description

Product name..... : Docking Station

Model and/or type reference ..... : PCDock

Family Model..... : N/A

Standards..... : FCC Part15.407

Test procedure ..... ANSI C63.10-2013 and KDB 789033 D02 General UNII Test Procedures New Rules v02r01
FCC KDB 662911 D01 Multiple Transmitter Output v02r01

This device described above has been tested by NTEK, and the test results show that the equipment under test (EUT) is in compliance with the FCC requirements. And it is applicable only to the tested sample identified in the report.

This report shall not be reproduced except in full, without the written approval of NTEK, this document may be altered or revised by NTEK, personnel only, and shall be noted in the revision of the document.

Date of Test .....

Date (s) of performance of tests ..... 28 Jan. 2021 ~ 19 Mar. 2021

Date of Issue..... 19 Mar. 2021

Test Result..... **Pass**

Testing Engineer : (Mary Hu)

Technical Manager : (Jason Chen)

Authorized Signatory : (Alex Li)

Table of Contents

	Page
1. SUMMARY OF TEST RESULTS	6
1.1 FACILITIES AND ACCREDITATIONS	7
1.2 MEASUREMENT UNCERTAINTY	7
2. GENERAL INFORMATION	8
2.1 GENERAL DESCRIPTION OF EUT	8
2.2 DESCRIPTION OF TEST MODES	10
2.3 BLOCK DIGRAM SHOWING THE CONFIGURATION OF SYSTEM TESTED	11
2.4 DESCRIPTION OF SUPPORT UNITS(CONDUCTED MODE)	12
2.5 EQUIPMENTS LIST FOR ALL TEST ITEMS	13
3. EMC EMISSION TEST	15
3.1 CONDUCTED EMISSION MEASUREMENT	15
3.1.1 APPLICABLE STANDARD	15
3.1.2 CONFORMANCE LIMIT	15
3.1.3 TEST CONFIGURATION	15
3.1.4 TEST PROCEDURE	15
3.2 RADIATED EMISSION MEASUREMENT	20
3.2.1 APPLICABLE STANDARD	20
3.2.2 CONFORMANCE LIMIT	20
3.2.3 MEASURING INSTRUMENTS	20
3.2.4 TEST CONFIGURATION	21
3.2.5 TEST PROCEDURE	22
3.2.6 TEST RESULTS (9KHZ – 30 MHZ)	23
3.2.7 TEST RESULTS (30MHZ – 1GHZ)	24
3.2.8 TEST RESULTS (1GHZ-18GHZ)	28
3.2.10 TEST RESULTS (18GHZ-40GHZ)	30
4. POWER SPECTRAL DENSITY TEST	35
4.1 APPLIED PROCEDURES / LIMIT	35
4.2 TEST PROCEDURE	36
4.3 DEVIATION FROM STANDARD	36
4.4 TEST SETUP	36
4.5 EUT OPERATION CONDITIONS	36
4.6 TEST RESULTS	37
5. 26DB & 99% EMISSION BANDWIDTH	38
5.1 APPLIED PROCEDURES / LIMIT	38
5.2 TEST PROCEDURE	38
5.3 EUT OPERATION CONDITIONS	39
5.4 TEST RESULTS	39

Table of Contents

	Page
6. MINIMUM 6 DB BANDWIDTH	40
6.1 APPLIED PROCEDURES / LIMIT	40
6.2 TEST PROCEDURE	40
6.3 DEVIATION FROM STANDARD	40
6.4 TEST SETUP	40
6.5 EUT OPERATION CONDITIONS	40
6.6 TEST RESULTS	41
7. MAXIMUM CONDUCTED OUTPUT POWER	42
7.1 PPLIED PROCEDURES / LIMIT	42
7.5 TEST RESULTS	44
8. OUT OF BAND EMISSIONS	45
8.1 APPLICABLE STANDARD	45
8.2 TEST PROCEDURE	45
8.3 DEVIATION FROM STANDARD	45
8.4 TEST SETUP	45
8.5 EUT OPERATION CONDITIONS	45
8.6 TEST RESULTS	46
9. FREQUENCY STABILITY MEASUREMENT	47
9.1 LIMIT	47
9.2 TEST PROCEDURES	47
9.3 TEST SETUP LAYOUT	47
9.4 EUT OPERATION DURING TEST	47
9.5 TEST RESULTS	48
10. ANTENNA REQUIREMENT	54
10.1 STANDARD REQUIREMENT	54
10.2 EUT ANTENNA	54

Revision History

Report No.	Version	Description	Issued Date
S21012802510004	Rev.01	Initial issue of report	19 Mar. 2021

1. SUMMARY OF TEST RESULTS

Test procedures according to the technical standards:

FCC Part15 (15.407) , Subpart E			
Standard Section	Test Item	Judgment	Remark
15.207	AC Power Line Conducted Emissions	PASS	
15.209(a), 15.407 (b)(1) 15.407 (b)(4) 15.407 (b)(8)	Spurious Radiated Emissions	PASS	
15.407 (a)(1) 15.407 (a)(3)	26 dB and 99% Emission Bandwidth	PASS	
15.407(e)	Minimum 6 dB bandwidth	PASS	
15.407 (a)(1) 15.407 (a)(3)	Maximum Conducted Output Power	PASS	
15.407(b)(1) 15.407(b)(4)	Band Edge	PASS	
15.407 (a)(1) 15.407 (a)(3)	Power Spectral Density	PASS	
15.407(b)	Spurious Emissions at Antenna Terminals	PASS	
15.203	Antenna Requirement	PASS	

NOTE:

(1)" N/A" denotes test is not applicable in this Test Report

(2) This device operates with a duty cycle greater than 99%

1.1 FACILITIES AND ACCREDITATIONS

FACILITIES

All measurement facilities used to collect the measurement data are located at
1/F, Building E, Fenda Science Park Sanwei, Xixiang, Bao'an District
Shenzhen, Guangdong, China

The sites are constructed in conformance with the requirements of ANSI C63.7, ANSI C63.10 and CISPR Publication 22.

LABORATORY ACCREDITATIONS AND LISTINGS

Site Description

CNAS-Lab.	:	The Laboratory has been assessed and proved to be in compliance with CNAS-CL01:2006 (identical to ISO/IEC 17025:2005) The Certificate Registration Number is L5516.
IC-Registration		The Certificate Registration Number is 9270A. CAB identifier:CN0074
FCC- Accredited		Test Firm Registration Number: 463705. Designation Number: CN1184
A2LA-Lab.		The Certificate Registration Number is 4298.01 This laboratory is accredited in accordance with the recognized International Standard ISO/IEC 17025:2005 General requirements for the competence of testing and calibration laboratories. This accreditation demonstrates technical competence for a defined scope and the operation of a laboratory quality management system (refer to joint ISO-ILAC-IAF Communiqué dated 8 January 2009).
Name of Firm	:	Shenzhen NTEK Testing Technology Co., Ltd.
Site Location	:	1/F, Building E, Fenda Science Park Sanwei, Xixiang, Bao'an District Shenzhen, Guangdong, China

1.2 MEASUREMENT UNCERTAINTY

The reported uncertainty of measurement y±U, where expended uncertainty U is based on a standard uncertainty multiplied by a coverage factor of k=2, providing a level of confidence of approximately 95 %.

No.	Item	Uncertainty
1	Conducted Emission Test	±2.80dB
2	RF power, conducted	±0.16dB
3	Spurious emissions, conducted	±0.21dB
4	All emissions, radiated(30MHz~1GHz)	±2.64dB
5	All emissions, radiated(1GHz~6GHz)	±2.40dB
6	All emissions, radiated(> 6GHz)	±2.52dB
7	Temperature	±0.5°C
8	Humidity	±2%

2. GENERAL INFORMATION

2.1 GENERAL DESCRIPTION OF EUT

Equipment	Docking Station
Trade Mark	LANQ
Model Name	PCDock
Family Model	N/A
Model Difference	N/A
FCC ID	2AZKX-PCDOCK
Product Description	

Mode Supported	☒802.11a ☒802.11n(HT20) ☒802.11n(HT40) ☒802.11ac(HT20) ☒802.11ac(HT40) ☒802.11ac(HT80)
Data Rate	802.11a: 6,9,12,18,24,36,48,54Mbps; 802.11n(HT20/HT40):MCS0-MCS15; 802.11ac(VHT20): NSS1, MCS0-MCS8 802.11ac(VHT40/VHT80):NSS1, MCS0-MCS9
Modulation	OFDM with BPSK/QPSK/16QAM/64QAM
Operating Frequency Range	☒ U-NII-1: 5150 MHz ~5250MHz ☐ U-NII-2A: 5250MHz~5350MHz ☐ U-NII-2C: 5470MHz~5725MHz ☒ U-NII-3: 5725 MHz ~5850 MHz
Function:	☐Outdoor AP ☐Indoor AP ☐Fixed P2P ☒Client
Antenna Type	FPCB Antenna
Antenna Gain	Antenna 1: 6.33dBi Antenna 2: 5.38dBi

Based on the application, features, or specification exhibited in User's Manual, More details of EUT technical specification, please refer to the User's Manual.

Ratings	DC 5V from USB port
Adapter	☐Adapter supply:
Battery	N/A
Connecting I/O Port(s)	Please refer to the User's Manual
HW Version	N/A
SW Version	N/A

Note:

1. For a more detailed features description, please refer to the manufacturer's specifications or the User's Manual.
2. Frequency and Channel list:

Band	20MHz		40MHz		80MHz	
	Channel	Frequency	Channel	Frequency	Channel	Frequency
U-NII-1	36	5180 MHz	38	5190 MHz	42	5210 MHz
	40	5200 MHz	46	5230 MHz	-	-
	44	5220 MHz				
	48	5240 MHz				
U-NII-3	149	5745 MHz	151	5755 MHz	155	5775 MHz
	153	5765 MHz	159	5795 MHz		
	157	5785 MHz				
	161	5805 MHz				
	165	5825 MHz				

For 5G WIFI has two antennas, and different modes support different transmit mode what describe as Following form:

Mode	Tx/Rx
802.11a	1TX, 1RX
802.11n/ac	1TX/2TX, 1RX/2RX

For 5GHz mode, Antenna 1,2 are transmitting, each with the same directional gain.
For MIMO mode, Directional gain=$10\log[(10^{G0/20}+10^{G1/20})^2/N_{ANT}]$ dBi =8.89dbi in 5GHz
the 802.11n(20/40) ac(20/40/80) 5GHz has MIMO mode.

Note: GANT means antenna gain for ANT in dBi.
NANT means the number of Antennas.

2.2 DESCRIPTION OF TEST MODES

To investigate the maximum EMI emission characteristics generates from EUT, the test system was pre-scanning tested base on the consideration of following EUT operation mode or test configuration mode which possible have effect on EMI emission level. Each of these EUT operation mode(s) or test configuration mode(s) mentioned above was evaluated respectively.

Pretest Mode	Description
Mode 1	Normal Link Mode
Mode 2	802.11a/n/ac20 CH36/CH40/CH48/CH149/CH157/CH165
Mode 3	802.11n40/ac40 CH38/CH46CH151/CH159
Mode 4	802.11ac80 CH42/CH155

For Radiated Emission	
Final Test Mode	Description
Mode 1	Normal Link Mode
Mode 2	802.11a/n/ac20 CH36/CH40/CH48/CH149/CH157/CH165
Mode 3	802.11n40/ac40 CH38/CH46CH151/CH159
Mode 4	802.11ac80 CH42/CH155

Note:

(1) The measurements are performed at the highest, middle, lowest available channels.

(2) The measurements are performed at all Bit Rate of Transmitter, the worst data was reported

2.3 BLOCK DIGRAM SHOWING THE CONFIGURATION OF SYSTEM TESTED

For AC Conducted Emission Mode

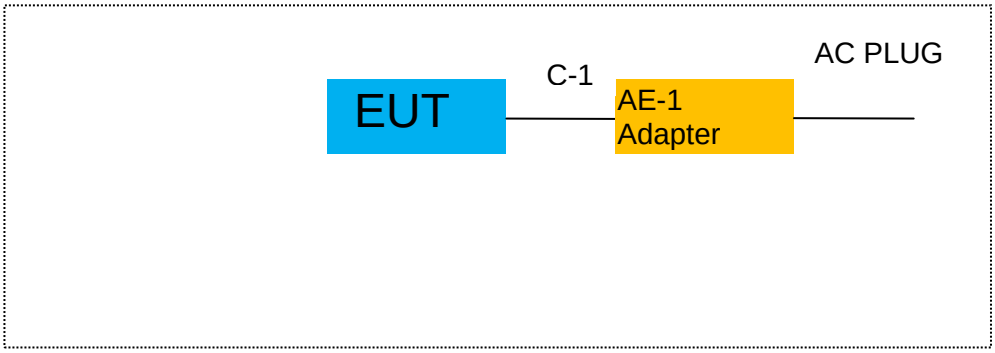

For Radiated Test Cases

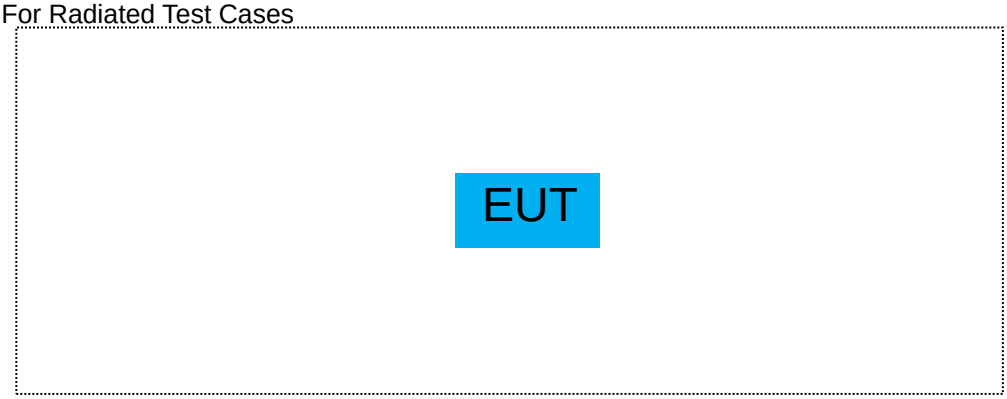

For Conducted Test Cases

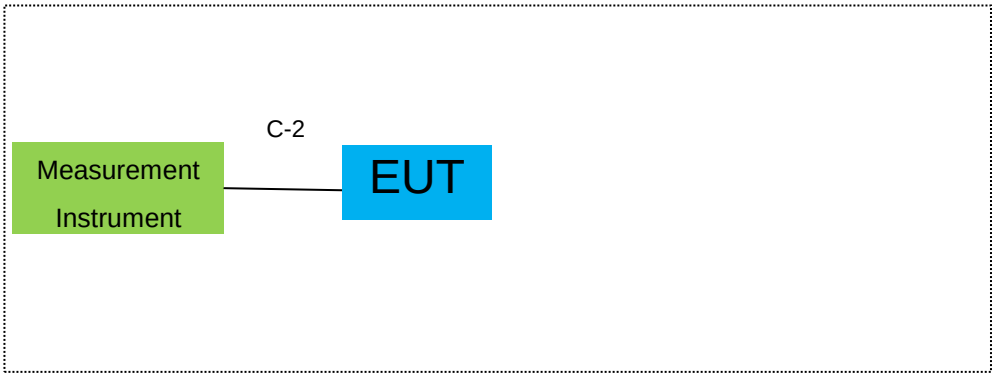

Note: 1. The temporary antenna connector is soldered on the PCB board in order to perform conducted tests and this temporary antenna connector is listed in the equipment list.

2.4 DESCRIPTION OF SUPPORT UNITS(CONDUCTED MODE)

The EUT has been tested as an independent unit together with other necessary accessories or support units. The following support units or accessories were used to form a representative test configuration during the tests.

Item	Equipment	Mfr/Brand	Model/Type No.	Series No.	Note
AE-1	Adapter	N/A	N/A	N/A	Peripherals

Item	Cable Type	Shielded Type	Ferrite Core	Length
C-1	Power Cable	NO	NO	1.2m
C-2	RF Cable	YES	NO	0.1m

Note:

(1) The support equipment was authorized by Declaration of Confirmation.

(2) For detachable type I/O cable should be specified the length in cm in 『Length』 column.

(3) During the battery power test, the battery is fully charged.

2.5 EQUIPMENTS LIST FOR ALL TEST ITEMS

Radiation& Conducted Test equipment

Item	Kind of Equipment	Manufacturer	Type No.	Serial No.	Last calibration	Calibrated until	Calibration period
1	Spectrum Analyzer	Aglient	E4407B	MY45108040	2020.05.11	2021.05.10	1 year
2	Spectrum Analyzer	Agilent	N9020A	MY49100060	2020.07.13	2021.07.12	1 year
3	Spectrum Analyzer	R&S	FSV40	101417	2020.08.07	2021.08.06	1 year
4	Test Receiver	R&S	ESPI7	101318	2020.05.11	2021.05.10	1 year
5	Bilog Antenna	TESEQ	CBL6111D	31216	2020.04.11	2021.04.10	1 year
6	50Ω Coaxial Switch	Anritsu	MP59B	6200983705	2020.05.11	2023.05.10	3 year
7	Horn Antenna	EM	EM-AH-10180	2011071402	2020.04.11	2021.04.10	1 year
8	Amplifier	EMC	EMC051835SE	980246	2020.07.13	2021.07.12	1 year
9	Active Loop Antenna	SCHWARZBECK	FMZB 1519 B	055	2020.05.11	2021.05.10	1 year
10	Power Meter	DARE	RPR3006W	15I00041SNO84	2020.07.13	2021.07.12	1 year
11	USB RF Power Sensor	DARE	RPR3006W	15I00041SNO84	2020.07.13	2021.07.12	1 year
12	Test Cable (9KHz-30MHz)	N/A	R-01	N/A	2019.08.06	2022.08.05	3 year
13	Test Cable (30MHz-1GHz)	N/A	R-02	N/A	2020.07.13	2021.07.12	1 year
14	High Test Cable(1G-40GHz)	N/A	R-03	N/A	2019.06.28	2022.06.27	3 year
15	High Test Cable(1G-40GHz)	N/A	R-04	N/A	2019.06.28	2022.06.27	3 year
16	Filter	TRILTHIC	2400MHz	29	2020.07.13	2021.07.12	1 year
17	temporary antenna connector (Note)	NTS	R001	N/A	N/A	N/A	N/A
18	Low Noise Amplifier	B&Z	BZ-P540-550850-452727	16476-11729	2020.04.15	2021.04.14	1 year
19	Broadband Horn Antenna	SCHWARZBECK	BBHA 9170	803	2020.05.11	2021.05.10	1 year
20	Thermal Chamber	Ten Billion	TTC-B3C	TBN-960502	2020.05.11	2021.05.10	1 year

Note:
We will use the temporary antenna connector (soldered on the PCB board) When conducted test
And this temporary antenna connector is listed within the instrument list

AC Conduction Test equipment

Item	Kind of Equipment	Manufacturer	Type No.	Serial No.	Last calibration	Calibrated until	Calibration period
1	Test Receiver	R&S	ESCI	101160	2020.05.11	2021.05.10	1 year
2	LISN	R&S	ENV216	101313	2020.04.11	2021.04.10	1 year
3	LISN	SCHWARZBECK	NNLK 8129	8129245	2020.05.11	2021.05.10	1 year
4	50Ω Coaxial Switch	ANRITSU CORP	MP59B	6200983704	2020.05.11	2023.05.10	3 year
5	Test Cable (9KHz-30MHz)	N/A	C01	N/A	2020.05.11	2023.05.10	3 year
6	Test Cable (9KHz-30MHz)	N/A	C02	N/A	2020.05.11	2023.05.10	3 year
7	Test Cable (9KHz-30MHz)	N/A	C03	N/A	2020.05.11	2021.05.10	1 year

Note: Each piece of equipment is scheduled for calibration once a year except the Test Cable& Aux Equipment which is scheduled for calibration every 3 years.

3. EMC EMISSION TEST

3.1 CONDUCTED EMISSION MEASUREMENT

3.1.1 APPLICABLE STANDARD

According to FCC Part 15.207(a)

3.1.2 CONFORMANCE LIMIT

Frequency(MHz)	Conducted Emission Limit	
	Quasi-peak	Average
0.15-0.5	66-56*	56-46*
0.5-5.0	56	46
5.0-30.0	60	50
Note: 1. *Decreases with the logarithm of the frequency 2. The lower limit shall apply at the transition frequencies 3. The limit decreases in line with the logarithm of the frequency in the range of 0.15 to 0.50MHz.		

3.1.3 TEST CONFIGURATION

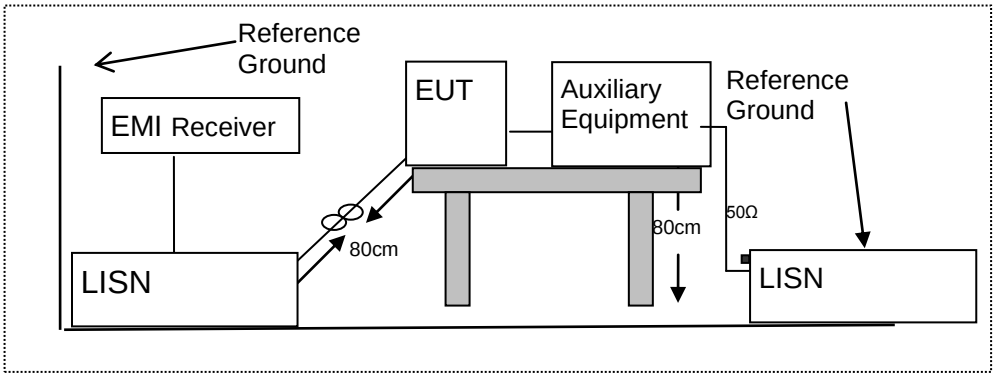

3.1.4 TEST PROCEDURE

According to the requirements in Section 13.1.4.1 of ANSI C63.10-2013 Conducted emissions the EUT measured in the frequency range between 0.15 MHz and 30 MHz using CISPR Quasi-Peak and average detector mode.

1. The EUT was placed 0.4 meter from the conducting wall of the shielding room.
2. The EUT was placed on a table which is 0.8m above ground plane.
3. Connect EUT to the power mains through a line impedance stabilization network (LISN). All other support equipments powered from additional LISN(s). The LISN provide 50 Ohm/ 50uH of coupling impedance for the measuring instrument.
4. Interconnecting cables that hang closer than 40 cm to the ground plane shall be folded back and forth in the center forming a bundle 30 to 40cm long.
5. I/O cables that are not connected to a peripheral shall be bundled in the center. The end of the cable may be terminated, if required, using the correct terminating impedance. The overall length shall not exceed 1 m.
6. LISN at least 80 cm from nearest part of EUT chassis.
7. The frequency range from 150KHz to 30MHz was searched.
8. Set the test-receiver system to Peak Detect Function and specified bandwidth(IF bandwidth=9KHz) with Maximum Hold Mode
9. For the actual test configuration, please refer to the related Item –EUT Test Photos.

EUT：	Docking Station	Model Name. ：	PCDock
Temperature：	23.5 ℃	Relative Humidity：	45%
Pressure：	1010hPa	Phase：	L
Test Voltage ：	DC 5V powered by Adapter AC 120V/60Hz	Test Mode：	Mode 1(5.2G)

Frequency (MHz)	Reading Level (dBμV)	Correct Factor (dB)	Measure-ment (dBμV)	Limits (dBμV)	Margin (dB)	Remark
0.1785	46.15	9.55	55.70	64.55	-8.85	QP
0.1785	25.51	9.55	35.06	54.55	-19.49	AVG
0.2379	41.95	9.55	51.50	62.17	-10.67	QP
0.2379	27.08	9.55	36.63	52.17	-15.54	AVG
0.4858	38.07	9.55	47.62	56.24	-8.62	QP
0.4858	27.80	9.55	37.35	46.24	-8.89	AVG
3.0939	34.80	9.60	44.40	56.00	-11.60	QP
3.0939	25.25	9.60	34.85	46.00	-11.15	AVG
3.9620	36.10	9.60	45.70	56.00	-10.30	QP
3.9620	25.07	9.60	34.67	46.00	-11.33	AVG
4.5099	35.98	9.62	45.60	56.00	-10.40	QP
4.5099	25.18	9.62	34.80	46.00	-11.20	AVG

Remark:
1. All readings are Quasi-Peak and Average values.
2. Factor = Insertion Loss + Cable Loss.

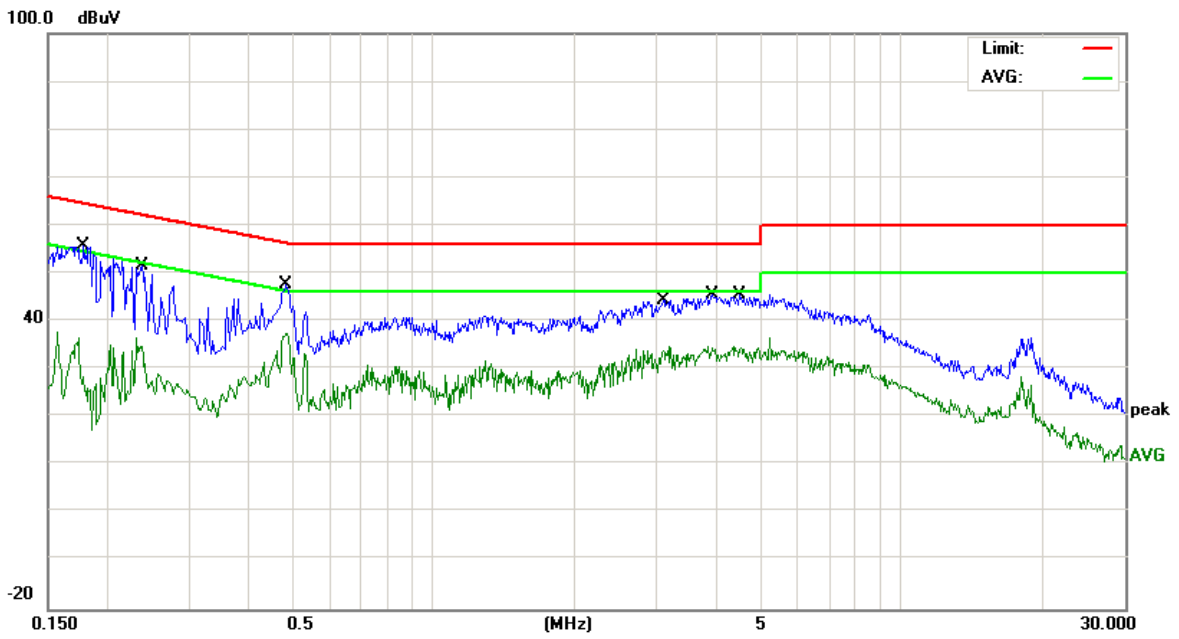

EUT：	Docking Station	Model Name. ：	PCDock
Temperature：	23.5 ℃	Relative Humidity：	45%
Pressure：	1010hPa	Phase：	N
Test Voltage ：	DC 5V powered by Adapter AC 120V/60Hz	Test Mode：	Mode 1(5.2G)

Frequency (MHz)	Reading Level (dBμV)	Correct Factor (dB)	Measure-ment (dBμV)	Limits (dBμV)	Margin (dB)	Remark
0.1650	50.55	9.55	60.10	65.20	-5.10	QP
0.1650	26.94	9.55	36.49	55.20	-18.71	AVG
0.2379	42.96	9.54	52.50	62.17	-9.67	QP
0.2379	25.09	9.54	34.63	52.17	-17.54	AVG
0.3099	38.65	9.53	48.18	59.97	-11.79	QP
0.3099	15.13	9.53	24.66	49.97	-25.31	AVG
0.4500	37.86	9.54	47.40	56.87	-9.47	QP
0.4500	26.44	9.54	35.98	46.87	-10.89	AVG
1.2500	33.25	9.55	42.80	56.00	-13.20	QP
1.2500	20.39	9.55	29.94	46.00	-16.06	AVG
4.1939	38.20	9.60	47.80	56.00	-8.20	QP
4.1939	26.07	9.60	35.67	46.00	-10.33	AVG

Remark:

1. All readings are Quasi-Peak and Average values.
2. Factor = Insertion Loss + Cable Loss.

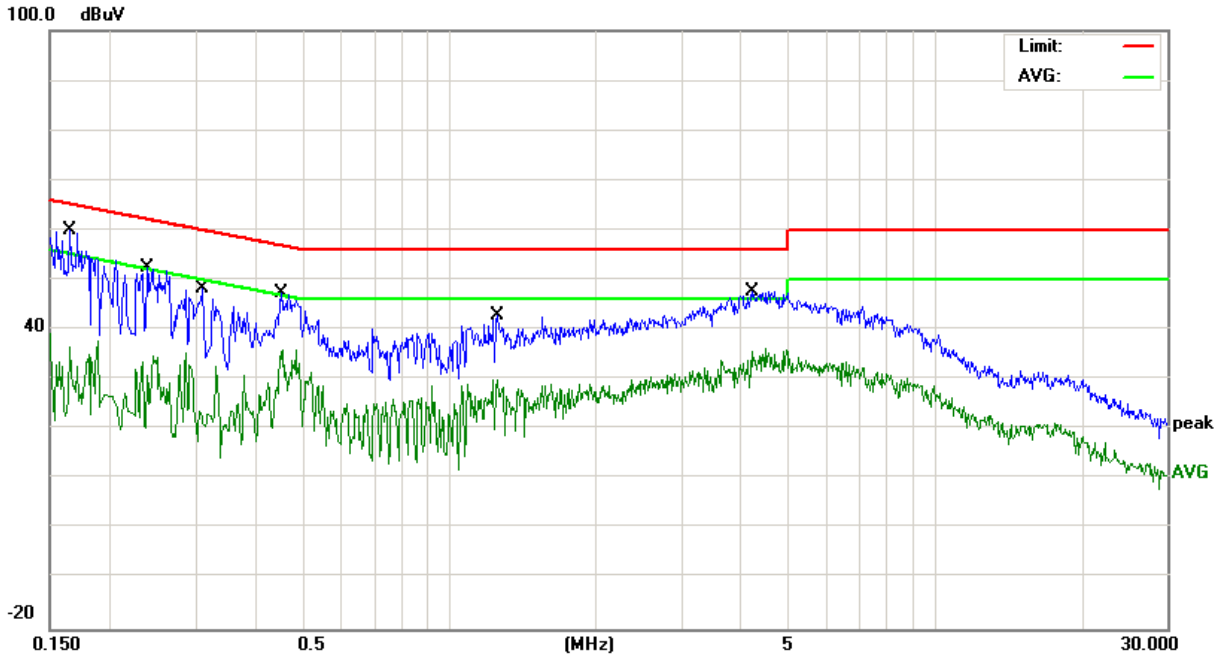

EUT：	Docking Station	Model Name. ：	PCDock
Temperature：	23.5 ℃	Relative Humidity：	45%
Pressure：	1010hPa	Phase：	L
Test Voltage ：	DC 5V powered by Adapter AC 120V/60Hz	Test Mode：	Mode 1(5.8G)

Frequency (MHz)	Reading Level (dBμV)	Correct Factor (dB)	Measure-ment (dBμV)	Limits (dBμV)	Margin (dB)	Remark
0.1675	46.34	9.56	55.90	65.08	-9.18	QP
0.1675	26.52	9.56	36.08	55.08	-19.00	AVG
0.1872	44.28	9.55	53.83	64.16	-10.33	QP
0.1872	27.74	9.55	37.29	54.16	-16.87	AVG
0.2184	43.05	9.55	52.60	62.88	-10.28	QP
0.2184	28.94	9.55	38.49	52.88	-14.39	AVG
0.5100	35.75	9.55	45.30	56.00	-10.70	QP
0.5100	25.31	9.55	34.86	46.00	-11.14	AVG
1.3619	32.74	9.56	42.30	56.00	-13.70	QP
1.3619	20.28	9.56	29.84	46.00	-16.16	AVG
4.5099	35.45	9.62	45.07	56.00	-10.93	QP
4.5099	25.23	9.62	34.85	46.00	-11.15	AVG

Remark:

1. All readings are Quasi-Peak and Average values.
2. Factor = Insertion Loss + Cable Loss.

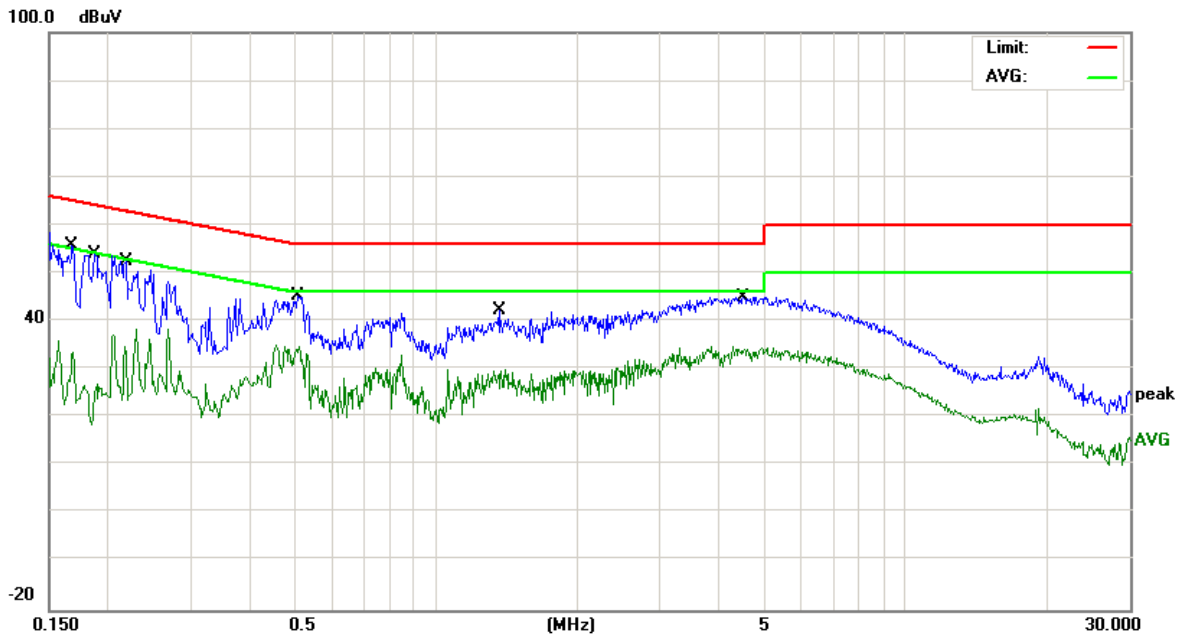

EUT：	Docking Station	Model Name. ：	PCDock
Temperature：	23.5 ℃	Relative Humidity：	45%
Pressure：	1010hPa	Phase：	N
Test Voltage ：	DC 5V powered by Adapter AC 120V/60Hz	Test Mode：	Mode 1(5.8G)

Frequency (MHz)	Reading Level (dBμV)	Correct Factor (dB)	Measure-ment (dBμV)	Limits (dBμV)	Margin (dB)	Remark
0.1728	52.05	9.55	61.60	64.82	-3.22	QP
0.1728	28.75	9.55	38.30	54.82	-16.52	AVG
0.2459	43.36	9.54	52.90	61.89	-8.99	QP
0.2459	28.27	9.54	37.81	51.89	-14.08	AVG
0.2878	41.47	9.53	51.00	60.59	-9.59	QP
0.2878	28.47	9.53	38.00	50.59	-12.59	AVG
0.4420	38.16	9.54	47.70	57.02	-9.32	QP
0.4420	26.82	9.54	36.36	47.02	-10.66	AVG
0.5420	34.86	9.54	44.40	56.00	-11.60	QP
0.5420	22.79	9.54	32.33	46.00	-13.67	AVG
4.6257	36.17	9.61	45.78	56.00	-10.22	QP
4.6257	23.86	9.61	33.47	46.00	-12.53	AVG

Remark:
1. All readings are Quasi-Peak and Average values.
2. Factor = Insertion Loss + Cable Loss.

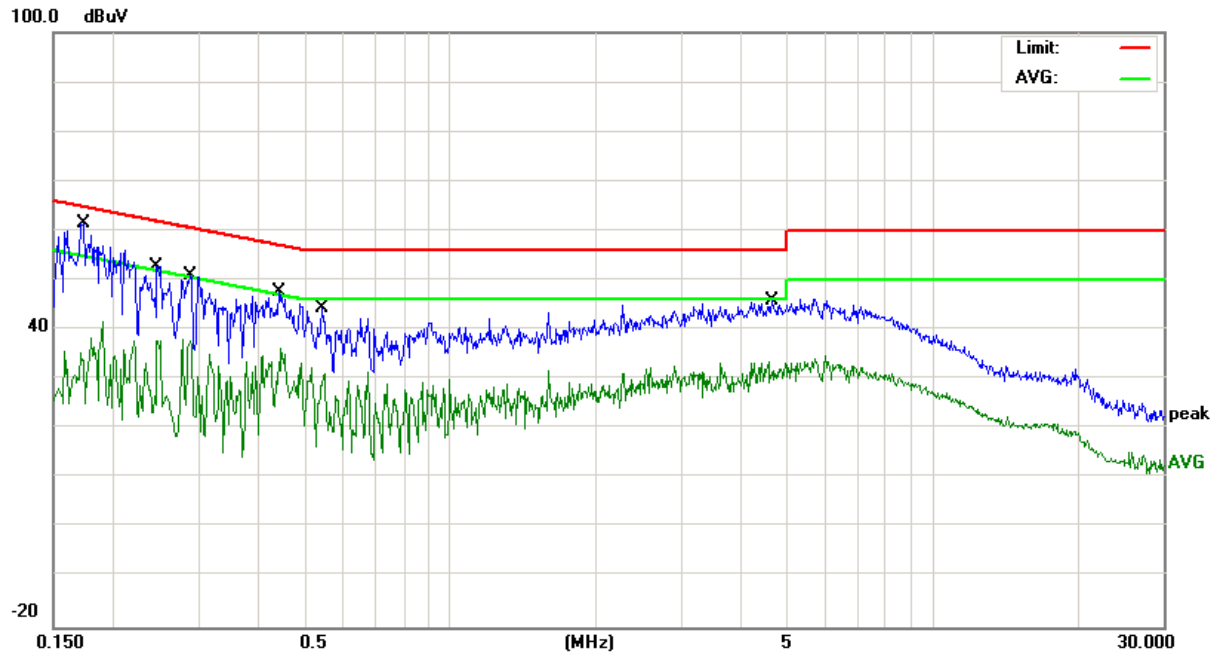

3.2 RADIATED EMISSION MEASUREMENT

3.2.1 APPLICABLE STANDARD

According to FCC Part 15.407(b)(9) and 15.209

3.2.2 CONFORMANCE LIMIT

According to FCC Part 15.407(b) (9): radiated emissions which fall in the restricted bands, as defined in §15.205(a), must also comply with the radiated emission limits specified in §15.209(a) (see §15.205(c)).
According to FCC Part15.205, Restricted bands

MHz	MHz	MHz	GHz
0.090-0.110	16.42-16.423	399.9-410	4.5-5.15
0.495-0.505	16.69475-16.69525	608-614	5.35-5.46
2.1735-2.1905	16.80425-16.80475	960-1240	7.25-7.75
4.125-4.128	25.5-25.67	1300-1427	8.025-8.5
4.17725-4.17775	37.5-38.25	1435-1626.5	9.0-9.2
4.20725-4.20775	73-74.6	1645.5-1646.5	9.3-9.5
6.215-6.218	74.8-75.2	1660-1710	10.6-12.7
6.26775-6.26825	123-138	2200-2300	14.47-14.5
8.291-8.294	149.9-150.05	2310-2390	15.35-16.2
8.362-8.366	156.52475-156.52525	2483.5-2500	17.7-21.4
8.37625-8.38675	156.7-156.9	2690-2900	22.01-23.12
8.41425-8.41475	162.0125-167.17	3260-3267	23.6-24.0
12.29-12.293	167.72-173.2	3332-3339	31.2-31.8
12.51975-12.52025	240-285	3345.8-3358	36.43-36.5
12.57675-12.57725	322-335.4	3600-4400	(2)
13.36-13.41			

20dBc in any 100 kHz bandwidth outside the operating frequency band. In case the emission fall within the restricted band specified on 15.205(a), then the 15.209(a) limit in the table below has to be followed.

Restricted Frequency(MHz)	Field Strength (μV/m)	Field Strength (dBμV/m)	Measurement Distance
0.009~0.490	2400/F(KHz)	20 log (uV/m)	300
0.490~1.705	24000/F(KHz)	20 log (uV/m)	30
1.705~30.0	30	29.5	30
30-88	100	40	3
88-216	150	43.5	3
216-960	200	46	3
Above 960	500	54	3

Limits of Radiated Emission Measurement(Above 1000MHz)

Frequency(MHz)	Class B (dBuV/m) (at 3M)	
	PEAK	AVERAGE
Above 1000	74	54

Remark :1. Emission level in dBuV/m=20 log (uV/m)
2. Measurement was performed at an antenna to the closed point of EUT distance of meters.
3. For Frequency 9kHz~30MHz:
Distance extrapolation factor =40log(Specific distance/ test distance)(dB);
Limit line=Specific limits(dBuV) + distance extrapolation factor.
For Frequency above 30MHz:
Distance extrapolation factor =20log(Specific distance/ test distance)(dB);
Limit line=Specific limits(dBuV) + distance extrapolation factor.

3.2.3 MEASURING INSTRUMENTS

The Measuring equipment is listed in the section 6.3 of this test report.

3.2.4 TEST CONFIGURATION

(a) For radiated emissions below 30MHz

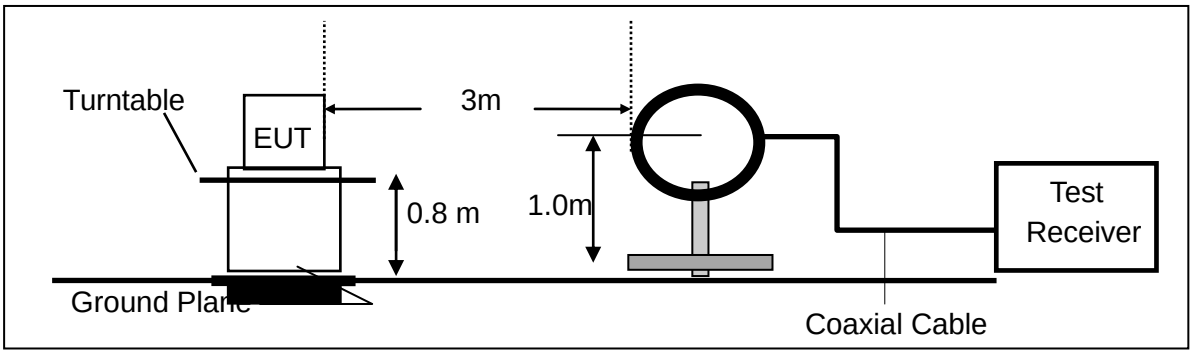

(b) For radiated emissions from 30MHz to 1000MHz

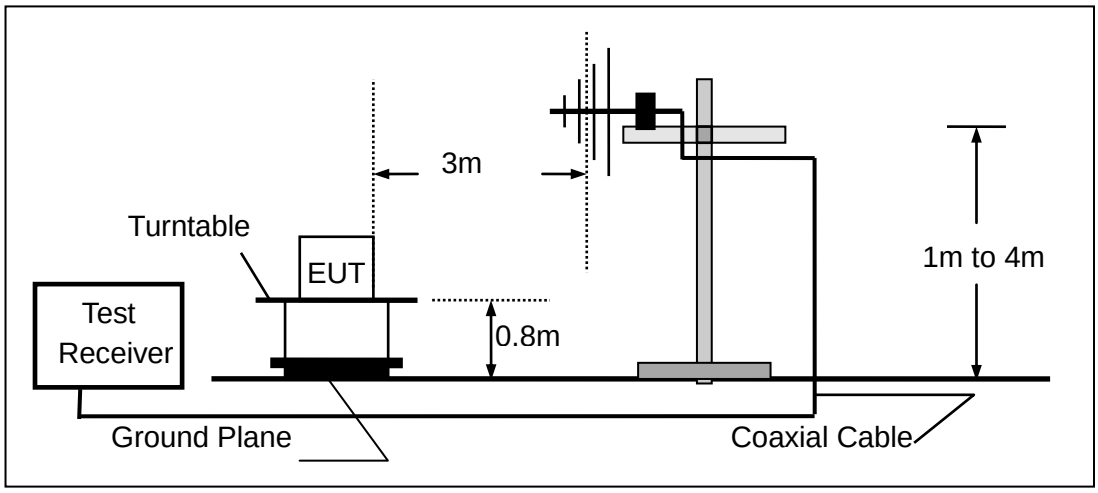

(c) For radiated emissions above 1000MHz

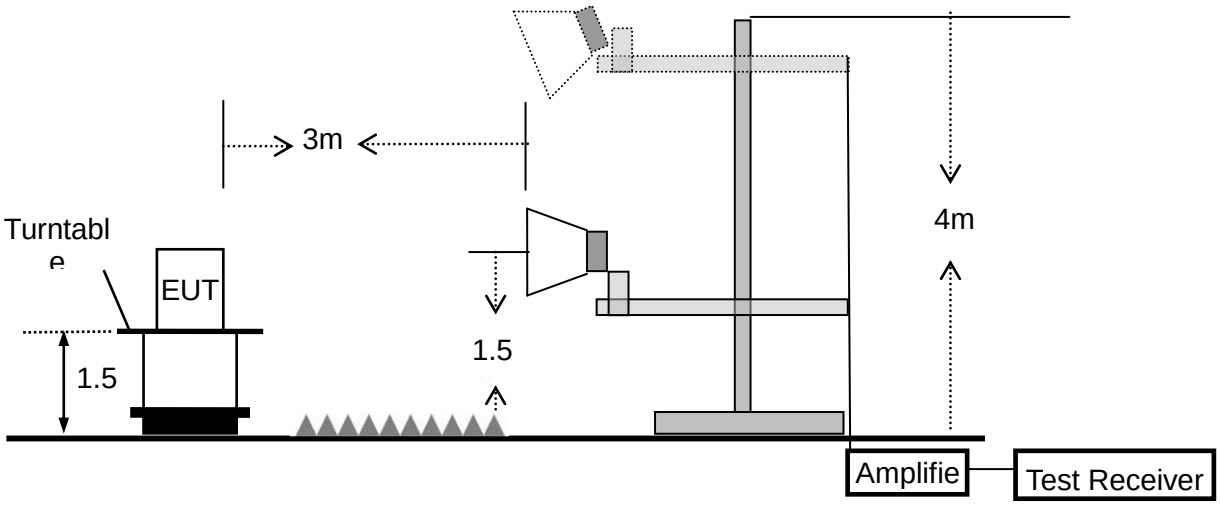

3.2.5 TEST PROCEDURE

The test site semi-anechoic chamber has met the requirement of NSA tolerance 4 dB according to the standards: ANSI C63.10-2013. The test distance is 3m.The setup is according to the requirements in Section 13.1.4.1 of ANSI C63.10-2013 and CAN/CSA-CEI/IEC CISPR 22.
This test is required for any spurious emission that falls in a Restricted Band, as defined in Section 15.205.
It must be performed with the highest gain of each type of antenna proposed for use with the EUT.
Use the following spectrum analyzer settings:

Spectrum Parameter	Setting
Attenuation	Auto
Start Frequency	1000 MHz
Stop Frequency	10th carrier harmonic
RB / VB (emission in restricted band)	1 MHz / 1 MHz for Peak, 1 MHz / 10Hz for Average

Receiver Parameter	Setting
Attenuation	Auto
Start ~ Stop Frequency	9kHz~150kHz / RB 200Hz for QP
Start ~ Stop Frequency	150kHz~30MHz / RB 9kHz for QP
Start ~ Stop Frequency	30MHz~1000MHz / RB 120kHz for QP

a. The measuring distance of at 3 m shall be used for measurements at frequency up to 1GHz. For frequencies above 1GHz, any suitable measuring distance may be used.
b. The EUT was placed on the top of a rotating table 0.8 m for below 1GHz and 1.5m for above 1GHz the ground at a 3 meter. The table was rotated 360 degrees to determine the position of the highest radiation.
c. The height of the equipment or of the substitution antenna shall be 0.8 m for below 1GHz and 1.5m for above 1GHz; the height of the test antenna shall vary between 1 m to 4 m. Both horizontal and vertical polarizations of the antenna are set to make the measurement.
d. The initial step in collecting conducted emission data is a spectrum analyzer peak detector mode pre-scanning the measurement frequency range. Significant peaks are then marked and then Quasi Peak detector mode re-measured.
e. If the Peak Mode measured value compliance with and lower than Quasi Peak Mode Limit, the EUT shall be deemed to meet QP Limits and then no additional QP Mode measurement performed.
f. For the actual test configuration, please refer to the related Item –EUT Test Photos.

Note:

Both horizontal and vertical antenna polarities were tested
and performed pretest to three orthogonal axis. The worst case emissions were reported

During the radiated emission test, the Spectrum Analyzer was set with the following configurations:

Frequency Band (MHz)	Function	Resolution bandwidth	Video Bandwidth
30 to 1000	QP	120 kHz	300 kHz
Above 1000	Peak	1 MHz	1 MHz
	Average	1 MHz	10 Hz

Note: for the frequency ranges below 30 MHz, a narrower RBW is used for these ranges but the measured value should add a RBW correction factor (RBWCF) where RBWCF [dB] =10*lg(100 [kHz]/narrower RBW [kHz]). , the narrower RBW is 1 kHz and RBWCF is 20 dB for the frequency 9 kHz to 150 kHz, and the narrower RBW is 10 kHz and RBWCF is 10 dB for the frequency 150 kHz to 30 MHz.

3.2.6 TEST RESULTS (9KHZ – 30 MHZ)

EUT :	Docking Station	Model Name :	PCDock
Temperature :	26 ℃	Relative Humidity :	54%
Pressure:	1010 hPa	Test Voltage :	DC 5V powered by Adapter AC 120V/60Hz
Test Mode :	TX	Polarization :	--

Freq.	Reading	Limit	Margin	State
(MHz)	(dBuV/m)	(dBuV/m)	(dB)	P/F
--	--	--	--	N/A
--	--	--	--	N/A

NOTE:

The amplitude of spurious emissions which are attenuated by more than 20dB below the permissible value has no need to be reported.

3.2.7 TEST RESULTS (30MHZ – 1GHZ)

EUT :	Docking Station	Model Name :	PCDock
Temperature :	25.2	Relative Humidity :	55
Pressure :	1010 hPa	Test Voltage :	DC 5V powered by Adapter AC 120V/60Hz
Test Mode :	TX(5.2G)- 802.11n20 (Low CH)		

Polar (H/V)	Frequency (MHz)	Meter Reading (dBuV)	Factor (dB)	Emission Level (dBuV/m)	Limits (dBuV/m)	Margin (dB)	Remark
V	118.6012	15.87	12.43	28.30	43.50	-15.20	QP
V	147.4036	18.09	12.01	30.10	43.50	-13.40	QP
V	169.5988	20.50	10.80	31.30	43.50	-12.20	QP
V	313.2760	17.97	15.33	33.30	46.00	-12.70	QP
V	787.8513	10.07	25.13	35.20	46.00	-10.80	QP
V	962.1621	12.23	28.40	40.63	54.00	-13.37	QP

Remark:

Emission Level= Meter Reading+ Factor, Margin= Emission Level - Limit

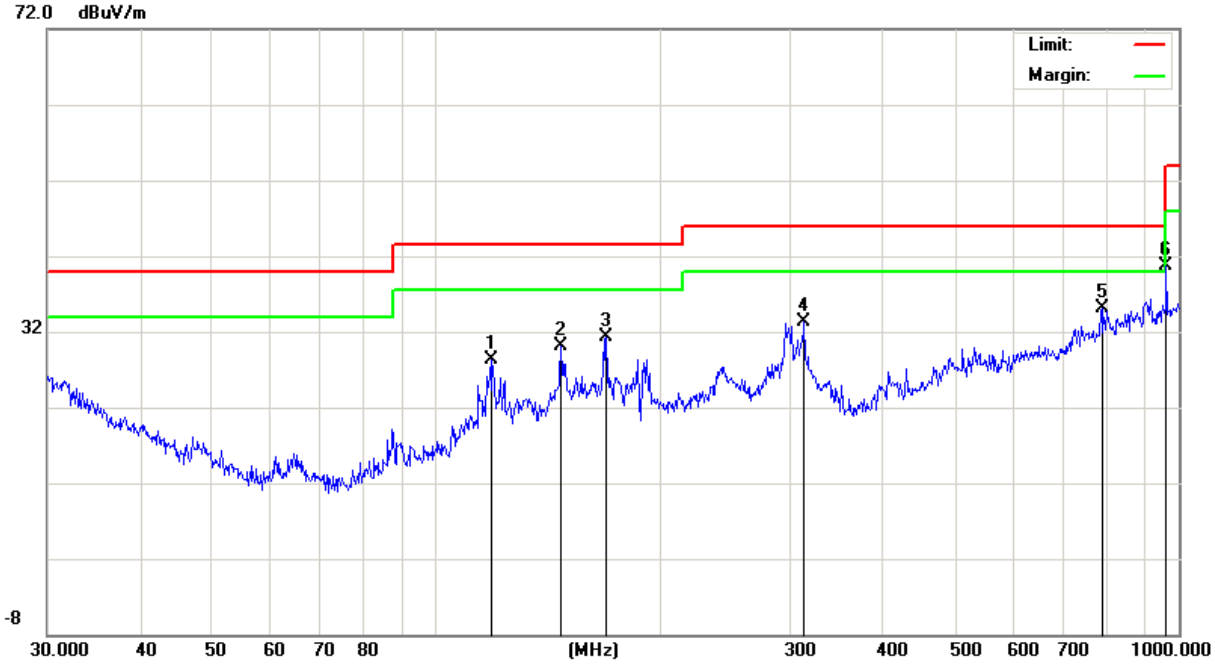

Polar (H/V)	Frequency (MHz)	Meter Reading (dBuV)	Factor (dB)	Emission Level (dBuV/m)	Limits (dBuV/m)	Margin (dB)	Remark
H	119.8556	8.38	12.43	20.81	43.50	-22.69	QP
H	239.9874	25.93	11.73	37.66	46.00	-8.34	QP
H	314.3765	15.98	15.28	31.26	46.00	-14.74	QP
H	480.5276	13.78	19.51	33.29	46.00	-12.71	QP
H	890.7278	12.13	26.38	38.51	46.00	-7.49	QP
H	962.1623	11.26	28.40	39.66	54.00	-14.34	QP

Remark:

Emission Level= Meter Reading+ Factor, Margin= Emission Level - Limit

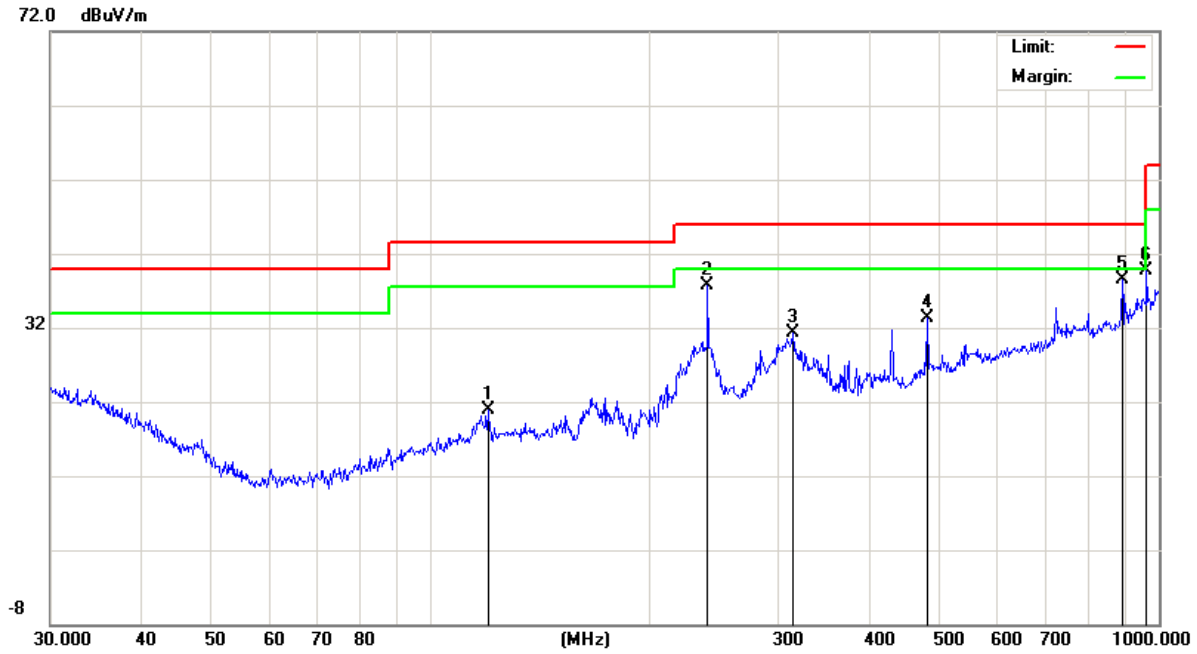

EUT :	Docking Station	Model Name :	PCDock
Temperature :	25.2	Relative Humidity :	55
Pressure :	1010 hPa	Test Voltage :	DC 5V powered by Adapter AC 120V/60Hz
Test Mode :	TX(5.8G) - 802.11ac20 (Low CH)		

Polar (H/V)	Frequency (MHz)	Meter Reading (dBuV)	Factor (dB)	Emission Level (dBuV/m)	Limits (dBuV/m)	Margin (dB)	Remark
V	117.3602	17.88	12.42	30.30	43.50	-13.20	QP
V	148.4410	20.11	11.99	32.10	43.50	-11.40	QP
V	163.1818	23.03	10.67	33.70	43.50	-9.80	QP
V	250.3009	18.02	13.48	31.50	46.00	-14.50	QP
V	303.5437	19.90	15.00	34.90	46.00	-11.10	QP
V	872.1832	12.59	25.81	38.40	46.00	-7.60	QP

Remark:

Emission Level= Meter Reading+ Factor, Margin= Emission Level - Limit

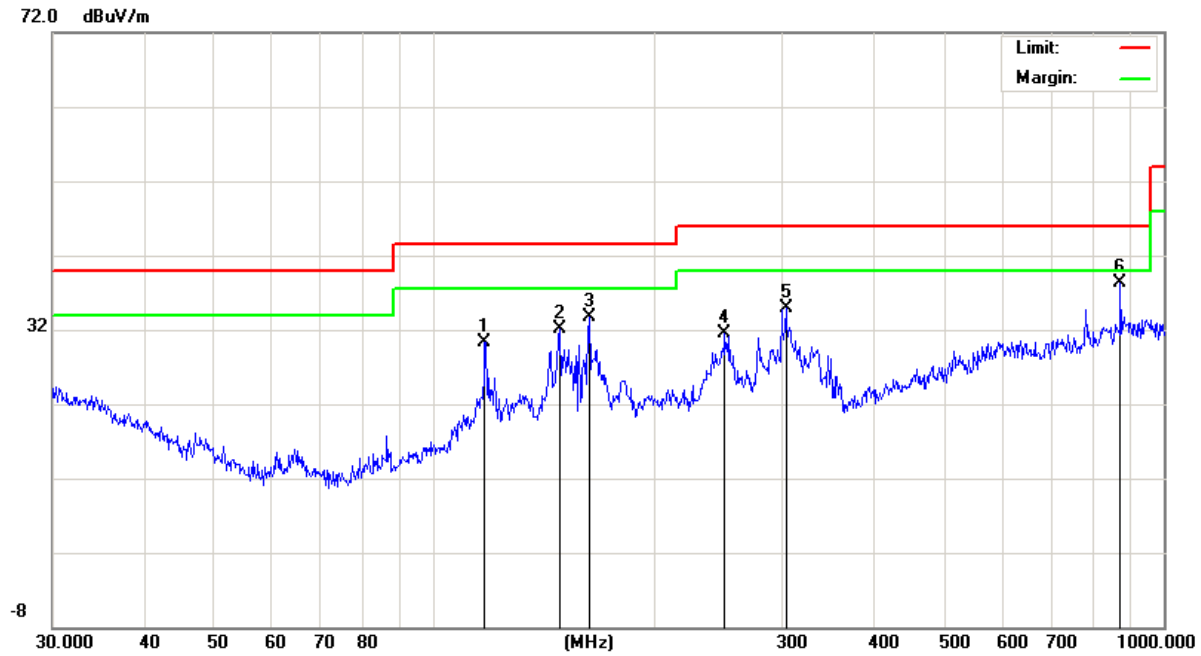

Polar (H/V)	Frequency (MHz)	Meter Reading (dBuV)	Factor (dB)	Emission Level (dBuV/m)	Limits (dBuV/m)	Margin (dB)	Remark
H	239.9874	26.28	11.73	38.01	46.00	-7.99	QP
H	316.5889	19.89	15.21	35.10	46.00	-10.90	QP
H	429.5228	13.78	18.28	32.06	46.00	-13.94	QP
H	473.8346	16.67	19.23	35.90	46.00	-10.10	QP
H	744.8659	11.59	25.01	36.60	46.00	-9.40	QP
H	851.0353	13.78	26.22	40.00	46.00	-6.00	QP

Remark:

Emission Level= Meter Reading+ Factor, Margin= Emission Level - Limit

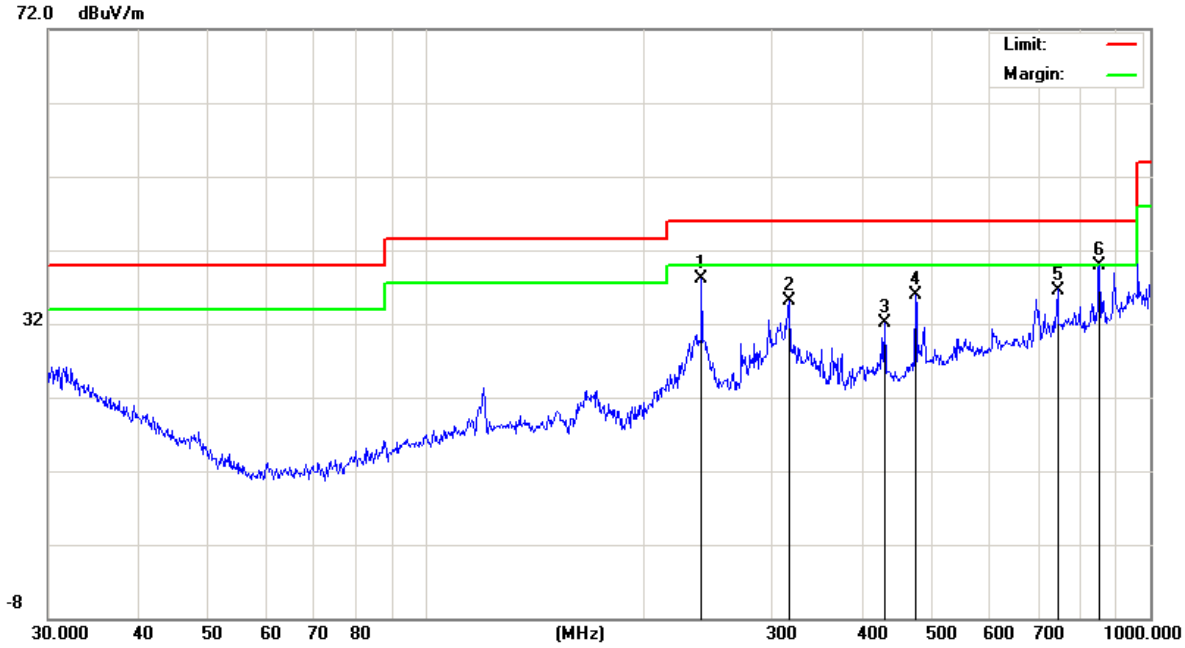

Note:All modes have been tested, just the the worst mode has been recorded in the report.

3.2.8 TEST RESULTS (1GHz-18GHz)

EUT：	Docking Station	Model Name. ：	PCDock
Temperature：	20 ℃	Relative Humidity：	48%
Pressure：	1010 hPa	Test Voltage ：	DC 5V powered by Adapter AC 120V/60Hz
Test Mode ：	TX(5.2G) - 802.11n20 _5180~5240MHz		

Note: 1,2 Represent the value of antenna 1 and 2,The worst data is Antenna 1,only shown Antenna 1 data

Polar	Frequency	Meter Reading	Cable loss	Antenna Factor	Preamp Factor	Emission Level	Limits	Margin	Detector Type
(H/V)	(MHz)	(dBuV)	(dB)	dB/m	(dB)	(dBuV/m)	(dBuV/m)	(dB)	
Low Channel (5180 MHz)-Above 1G									
Vertical	3015	52.39	5.94	35.4	44	49.73	68.2	-18.47	Pk
Vertical	10360	52.36	8.46	39.75	44.5	56.07	68.2	-12.13	Pk
Vertical	15540	60.21	10.12	38.8	44.1	65.03	74	-8.97	Pk
Vertical	15540	39.15	10.12	38.8	42.7	45.37	54	-8.63	AV
Horizontal	2981	54.07	5.94	35.18	44	51.19	68.2	-17.01	Pk
Horizontal	10360	50.43	8.46	38.71	44.5	53.10	68.2	-15.10	Pk
Horizontal	15540	55.69	10.12	38.38	44.1	60.09	74	-13.91	Pk
Horizontal	15540	36.55	10.12	38.38	44.1	40.95	54	-13.05	AV
Middle Channel (5200 MHz)-Above 1G									
Vertical	3561	57.07	6.48	36.35	44.05	55.85	68.2	-12.35	Pk
Vertical	10400	54.90	8.47	37.88	44.51	56.74	68.2	-11.46	Pk
Vertical	15600	54.54	10.12	38.8	44.1	59.36	74	-14.64	Pk
Vertical	15600	37.51	10.12	38.8	42.7	43.73	54	-10.27	AV
Horizontal	3363	53.19	6.48	36.37	44.05	51.99	68.2	-16.21	Pk
Horizontal	10400	50.56	8.47	38.64	44.5	53.17	68.2	-15.03	Pk
Horizontal	15600	56.84	10.12	38.38	44.1	61.24	74	-12.76	Pk
Horizontal	15600	42.96	10.12	38.38	44.1	47.36	54	-6.64	AV
High Channel (5200 MHz)-Above 1G									
Vertical	3926	56.86	7.1	37.24	43.5	57.70	74	-16.30	Pk
Vertical	3926	43.43	7.1	37.24	43.5	44.27	54	-9.73	AV
Vertical	10480	54.10	8.46	37.68	44.5	55.74	68.2	-12.46	Pk
Vertical	15720	56.70	10.12	38.8	44.1	61.52	74	-12.48	Pk
Vertical	15720	34.46	10.12	38.8	42.7	40.68	54	-13.32	AV
Horizontal	3885	63.16	7.1	37.24	43.5	64.00	74	-10.00	Pk
Horizontal	3885	39.62	7.1	37.24	43.5	40.46	54	-13.54	AV
Horizontal	10480	48.66	8.46	38.57	44.5	51.19	68.2	-17.01	Pk
Horizontal	15720	58.50	10.12	38.38	44.1	62.90	74	-11.10	Pk
Horizontal	15720	36.40	10.12	38.38	44.1	40.80	54	-13.20	AV

Note:"802.11n20 (5G)" mode is the worst mode. PK value is lower than the Average value limit, So average didn't record.

The amplitude of spurious emissions that are attenuated by more than 20dB below the permissible value has no need to be reported.

Emission level (dBuV/m) = 20 log Emission level (uV/m).

Corrected Reading: Antenna Factor + Cable Loss + Read Level - Preamp Factor = Level.

EUT :	Docking Station	Model Name. :	PCDock
Temperature :	20 ℃	Relative Humidity :	48%
Pressure :	1010 hPa	Test Voltage :	DC 5V powered by Adapter AC 120V/60Hz
Test Mode :	TX (5.8G) -- 802.11ac20 _5745~5825MHz		

Note: 1,2 Represent the value of antenna 1 and 2,The worst data is Antenna 1,only shown Antenna 1 data

Polar	Frequency	Meter Reading	Cable loss	Antenna Factor	Preamp Factor	Emission Level	Limits	Margin	Detector Type
(H/V)	(MHz)	(dBuV)	(dB)	dB/m	(dB)	(dBuV/m)	(dBuV/m)	(dB)	
Low Channel (5745 MHz)-Above 1G									
Vertical	2806.9	64.76	5.94	35.40	44.00	62.10	74.00	-11.90	Pk
Vertical	2806.9	46.37	5.94	35.40	44.00	43.71	54.00	-10.29	AV
Vertical	11490.56	63.61	8.46	39.75	44.50	67.32	74.00	-6.68	Pk
Vertical	11490.56	44.14	8.46	39.75	44.50	47.85	54.00	-6.15	AV
Vertical	17235.32	60.08	10.12	38.80	44.10	64.90	68.20	-3.30	Pk
Horizontal	2911.524	65.22	5.94	35.18	44.00	62.34	68.20	-5.86	Pk
Horizontal	11490.56	63.08	8.46	38.71	44.50	65.75	74.00	-8.25	Pk
Horizontal	11490.56	41.16	8.46	38.71	44.50	43.83	54.00	-10.17	AV
Horizontal	17235.56	59.09	10.12	38.38	44.10	63.49	68.20	-4.71	Pk
middle Channel (5785 MHz)-Above 1G									
Vertical	3763.083	64.50	6.48	36.35	44.05	63.28	74.00	-10.72	Pk
Vertical	3763.083	42.87	6.48	36.35	44.05	41.65	54.00	-12.35	AV
Vertical	11570.56	63.94	8.47	37.88	44.51	65.78	74.00	-8.22	Pk
Vertical	11570.56	45.53	8.47	37.88	44.51	47.37	54.00	-6.63	AV
Vertical	17355.56	63.84	10.12	38.8	44.10	68.66	68.20	0.46	Pk
Horizontal	3561.585	62.12	6.48	36.37	44.05	60.92	68.20	-7.28	Pk
Horizontal	11570.56	61.23	8.47	38.64	44.50	63.84	74.00	-10.16	Pk
Horizontal	11570.56	44.16	8.47	38.64	44.50	46.77	54.00	-7.23	AV
Horizontal	17355.56	63.94	10.12	38.38	44.10	68.34	74.00	-5.66	Pk
High Channel (5825 MHz)-Above 1G									
Vertical	3907.168	61.20	7.10	37.24	43.50	62.04	74.00	-11.96	Pk
Vertical	3907.168	43.55	7.10	37.24	43.50	44.39	54.00	-9.61	AV
Vertical	11650.54	61.55	8.46	37.68	44.50	63.19	74.00	-10.81	Pk
Vertical	11650.54	43.95	8.46	37.68	44.50	45.59	54.00	-8.41	AV
Vertical	17475.54	60.49	10.12	38.8	44.10	65.31	68.20	-2.89	Pk
Horizontal	3912.779	62.59	7.10	37.24	43.50	63.43	74.00	-10.57	Pk
Horizontal	3912.779	43.58	7.10	37.24	43.50	44.42	54.00	-9.58	AV
Horizontal	11650.54	63.84	8.46	38.57	44.50	66.37	74.00	-7.63	Pk
Horizontal	11650.54	43.37	8.46	38.57	44.50	45.90	54.00	-8.10	AV
Horizontal	17475.54	60.70	10.12	38.38	44.10	65.10	68.20	-3.10	Pk

Note:"802.11ac20(5G)" mode is the worst mode. PK value is lower than the Average value limit, So average didn't record.

The amplitude of spurious emissions that are attenuated by more than 20dB below the permissible value

has no need to be reported.

Emission level (dBuV/m) = 20 log Emission level (uV/m).

Corrected Reading: Antenna Factor + Cable Loss + Read Level - Preamp Factor = Level.

3.2.10 TEST RESULTS (18GHz-40GHz)

EUT :	Docking Station	Model Name. :	PCDock
Temperature :	20 ℃	Relative Humidity :	48%
Pressure :	1010 hPa	Test Voltage :	DC 5V powered by Adapter AC 120V/60Hz
Test Mode :	TX (5.2G)-802.11ac40 5180MHz~5240MHz; TX (5.8G)-802.11n20 5745MHz~5825MHz		

All the modulation modes have been tested, and the worst result was report as below:

Low Channel (5180 MHz)-Above 1G

Horizontal

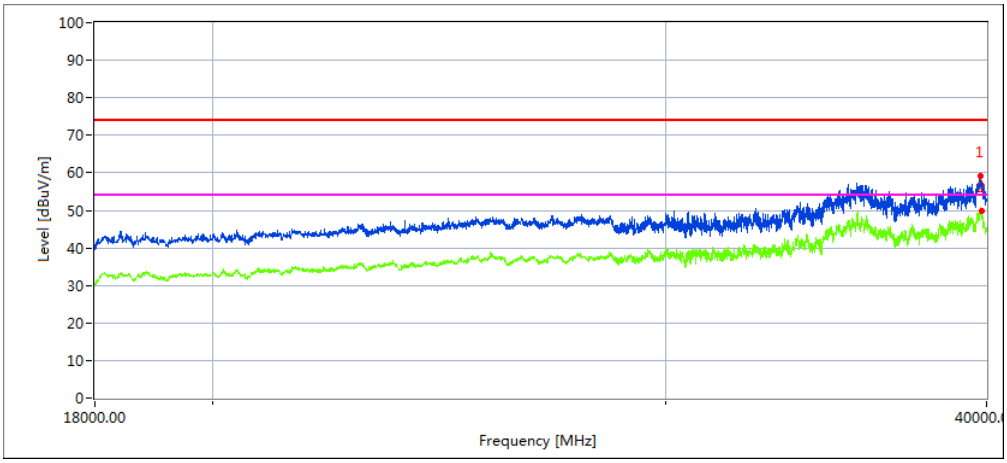

Frequency	Meter Reading	Cable loss	Antenna Factor	Preamp Factor	Emission Level	Limits	Margin	Remark
39782.579	32.63	20.09	44.07	43.48	53.31	68.20	14.89	Peak
39835.798	22.84	20.09	44.04	43.48	43.49	48.20	4.71	AVG

Vertical

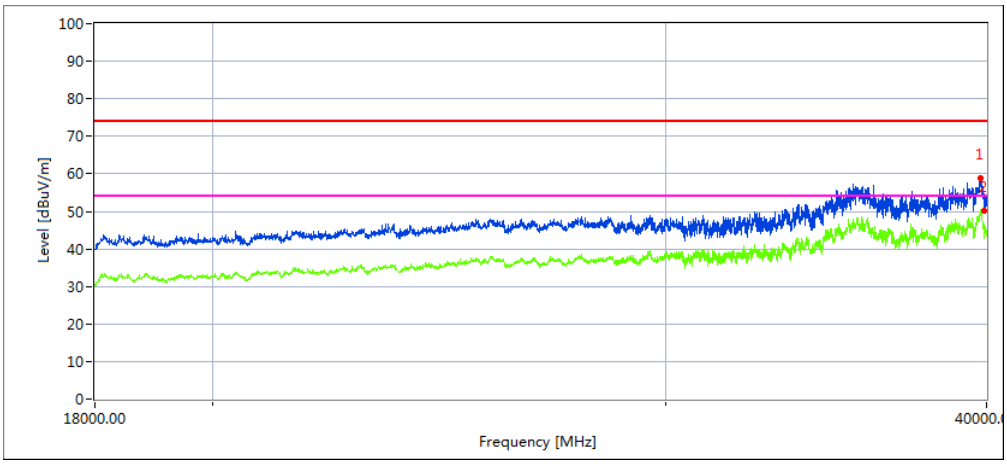

Frequency	Meter Reading	Cable loss	Antenna Factor	Preamp Factor	Emission Level	Limits	Margin	Remark
39798.745	35.93	19.11	42.73	44.61	53.16	68.20	15.04	Peak
39926.403	25.98	19.11	42.73	44.61	43.21	48.20	4.99	AVG

High Channel (5240 MHz)-Above 1G

Horizontal

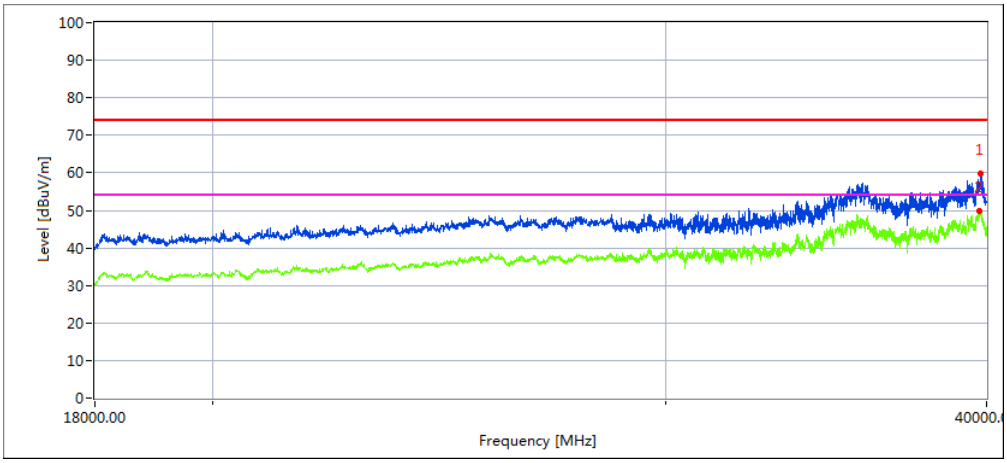

Frequency	Meter Reading	Cable loss	Antenna Factor	Preamp Factor	Emission Level	Limits	Margin	Remark
39799.400	33.53	20.09	44.07	43.48	54.21	68.20	13.99	Peak
39727.320	23.51	20.09	44.04	43.48	44.16	48.20	4.04	AVG

Vertical

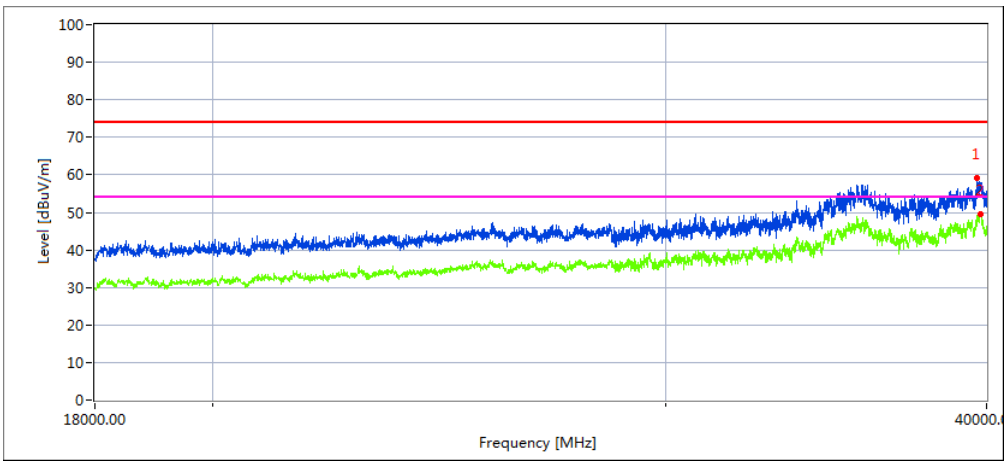

Frequency	Meter Reading	Cable loss	Antenna Factor	Preamp Factor	Emission Level	Limits	Margin	Remark
39672.327	31.64	20.09	44.07	43.48	52.32	68.20	15.88	Peak
39778.301	22.64	20.09	44.04	43.48	43.29	48.20	4.91	AVG

Low Channel (5745 MHz)-Above 1G

Horizontal

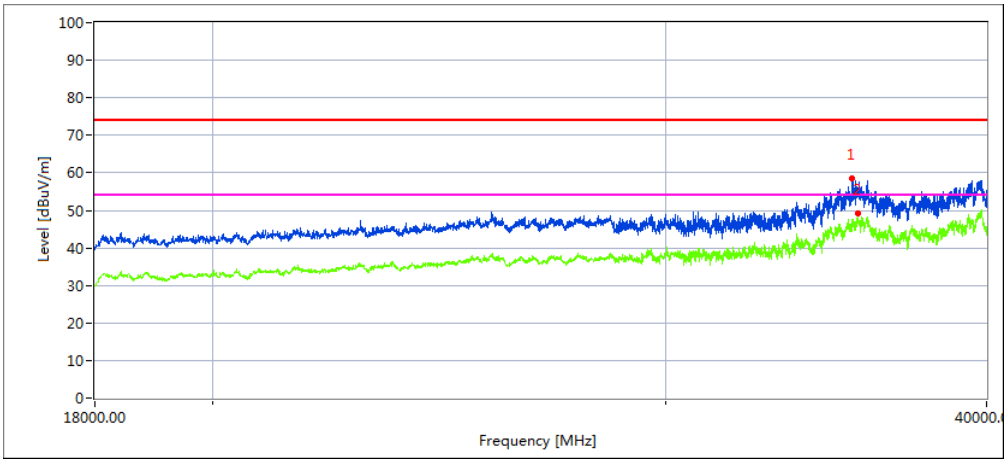

Frequency	Meter Reading	Cable loss	Antenna Factor	Preamp Factor	Emission Level	Limits	Margin	Remark
35459.391	30.47	20.09	44.16	43.48	51.24	68.20	16.96	Peak
35651.004	22.50	20.09	44.16	43.48	43.27	48.20	4.93	AVG

Vertical

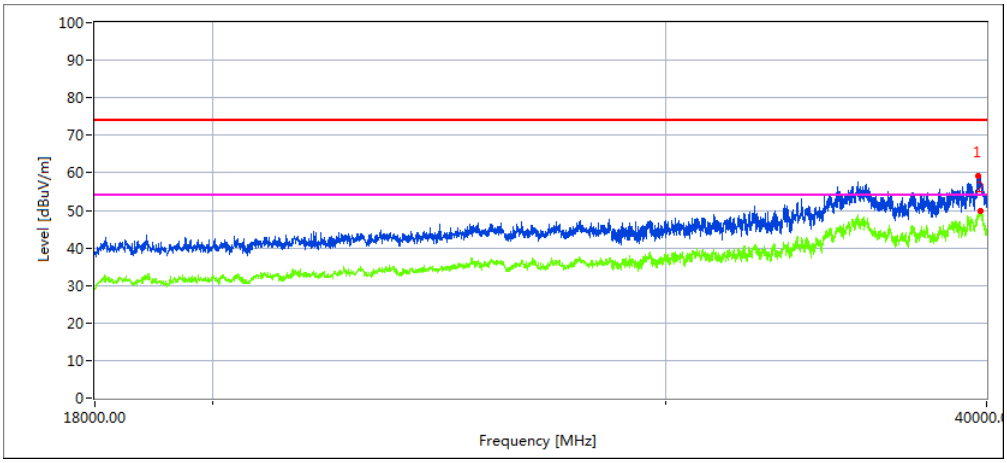

Frequency	Meter Reading	Cable loss	Antenna Factor	Preamp Factor	Emission Level	Limits	Margin	Remark
39716.107	33.31	20.06	44.07	43.21	54.23	68.20	13.97	Peak
39790.410	22.90	20.06	44.07	43.21	43.82	48.20	4.38	AVG

High Channel (5825 MHz)-Above 1G

Horizontal

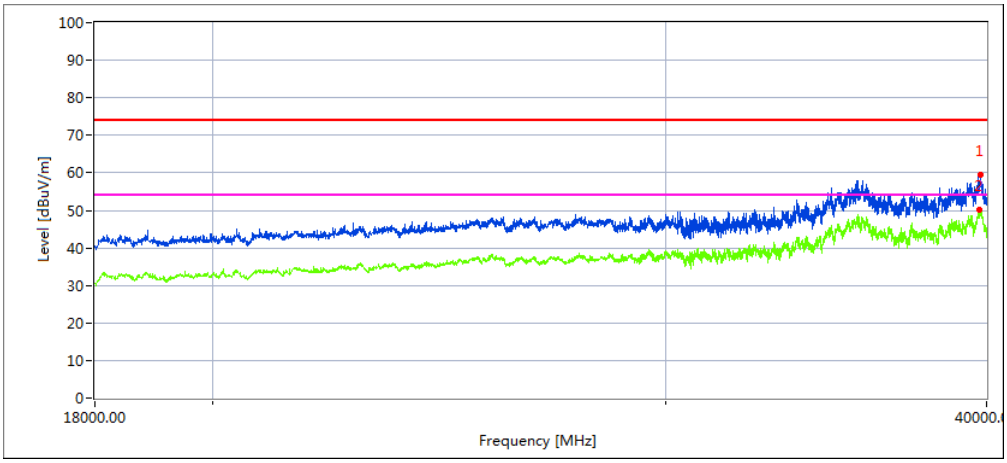

Frequency	Meter Reading	Cable loss	Antenna Factor	Preamp Factor	Emission Level	Limits	Margin	Remark
39765.175	36.03	19.11	42.63	43.48	54.29	68.20	13.91	Peak
39743.015	24.98	19.12	42.63	43.48	43.25	48.20	4.95	AVG

Vertical

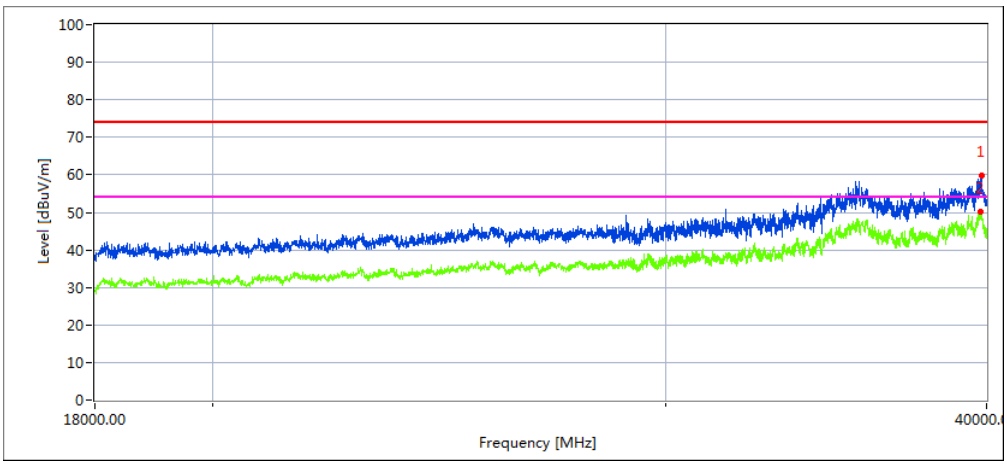

Frequency	Meter Reading	Cable loss	Antenna Factor	Preamp Factor	Emission Level	Limits	Margin	Remark
39815.247	33.01	20.10	44.10	43.22	53.99	68.20	14.21	Peak
39773.300	23.41	20.10	44.10	43.22	44.39	48.20	3.81	AVG

3.2.11 Spurious Emission in Restricted Band 4.5GHz~5.150 GHz& 5.350GHz~5460GHz

EUT：	Docking Station	Model Name. ：	PCDock
Temperature：	20 ℃	Relative Humidity：	48%
Pressure：	1010 hPa	Test Voltage ：	DC 5V powered by Adapter AC 120V/60Hz
Test Mode ：	TX (5.2G)-802.11n20 5150MHz~5250MHz,		

Note: 1,2 Represent the value of antenna 1 and 2,The worst data is Antenna 1,only shown Antenna 1 data

All the modulation modes have been tested, The report just record the worst data mode.

Frequency	Meter Reading	Cable Loss	Antenna Factor	Preamp Factor	Emission Level	Limits	Margin	Detector	Comment
(MHz)	(dBμV)	(dB)	dB/m	(dB)	(dBμV/m)	(dBμV/m)	(dB)	Type	
5.2G WIFI-802.11a Mode									
4500	63.28	5.2	35.6	44.2	59.88	74	-14.12	Pk	Horizontal
4500	45.96	5.2	35.6	44.2	42.56	54	-11.44	AV	Horizontal
4500	54.22	5.2	35.6	44.2	50.82	74	-23.18	Pk	Horizontal
4500	39.94	5.2	35.6	44.2	36.54	54	-17.46	AV	Horizontal
5150	69.42	5.36	35.66	44.22	66.22	74	-7.78	Pk	Horizontal
5150	50.99	5.36	35.66	44.22	47.79	54	-6.21	AV	Horizontal
5150	69.51	5.36	35.66	44.22	66.31	74	-7.69	Pk	Vertical
5150	50.76	5.36	35.66	44.22	47.56	54	-6.44	AV	Vertical
5350	62.02	5.68	35.68	44.22	59.16	74	-14.84	Pk	Vertical
5350	41.45	5.68	35.68	44.22	38.59	54	-15.41	AV	Vertical
5350	54.47	5.68	35.68	44.22	51.61	74	-22.39	Pk	Horizontal
5350	38.57	5.68	35.68	44.22	35.71	54	-18.29	AV	Horizontal

Note: (1) Emission Level= Antenna Factor + Cable Loss + Read Level - Preamp Factor

(2) “802.11n20 ” mode is the worst mode. When PK value is lower than the Average value limit, average don't record.

4. POWER SPECTRAL DENSITY TEST

4.1 APPLIED PROCEDURES / LIMIT

According to FCC §15.407(a)

For the band 5.15-5.25 GHz,

(i) For an outdoor access point operating in the band 5.15-5.25 GHz, the maximum power spectral density shall not exceed 17 dBm in any 1 megahertz band. If transmitting antennas of directional gain greater than 6 dBi are used, both the maximum conducted output power and the maximum power spectral density shall be reduced by the amount in dB that the directional gain of the antenna exceeds 6 dBi. The maximum e.i.r.p. at any elevation angle above 30 degrees as measured from the horizon must not exceed 125 mW (21 dBm).

(ii) For an indoor access point operating in the band 5.15-5.25 GHz, the maximum power spectral density shall not exceed 17 dBm in any 1 megahertz band. If transmitting antennas of directional gain greater than 6 dBi are used, both the maximum conducted output power and the maximum power spectral density shall be reduced by the amount in dB that the directional gain of the antenna exceeds 6 dBi.

(iii) For fixed point-to-point access points operating in the band 5.15-5.25 GHz, the maximum power spectral density shall not exceed 17 dBm in any 1 megahertz band. Fixed point-to-point U-NII devices may employ antennas with directional gain up to 23 dBi without any corresponding reduction in the maximum conducted output power or maximum power spectral density. For fixed point-to-point transmitters that employ a directional antenna gain greater than 23 dBi, a 1 dB reduction in maximum conducted output power and maximum power spectral density is required for each 1 dB of antenna gain in excess of 23 dBi. Fixed, point-to-point operations exclude the use of point-to-multipoint systems, omnidirectional applications, and multiple collocated transmitters transmitting the same information. The operator of the U-NII device, or if the equipment is professionally installed, the installer, is responsible for ensuring that systems employing high gain directional antennas are used exclusively for fixed, point-to-point operations.

(iv) For client devices in the 5.15-5.25 GHz band, the maximum power spectral density shall not exceed 11 dBm in any 1 megahertz band. If transmitting antennas of directional gain greater than 6 dBi are used, both the maximum conducted output power and the maximum power spectral density shall be reduced by the amount in dB that the directional gain of the antenna exceeds 6 dBi.

For the 5.25-5.35 GHz and 5.47-5.725 GHz bands, the maximum conducted output power over the frequency bands of operation shall not exceed the lesser of 250 mW or 11 dBm + 10 log B, where B is the 26 dB emission bandwidth in megahertz. In addition, the maximum power spectral density shall not exceed 11 dBm in any 1 megahertz band. If transmitting antennas of directional gain greater than 6 dBi are used, both the maximum conducted output power and the maximum power spectral density shall be reduced by the amount in dB that the directional gain of the antenna exceeds 6 dBi.

For the band 5.725-5.85 GHz

(3)For the band 5.725-5.85 GHz, the maximum power spectral density shall not exceed 30 dBm in any 500-kHz band. If transmitting antennas of directional gain greater than 6 dBi are used, both the maximum conducted output power and the maximum power spectral density shall be reduced by the amount in dB that the directional gain of the antenna exceeds 6 dBi.

,

4.2 TEST PROCEDURE

For devices operating in the bands 5.15-5.25 GHz, 5.25-5.35 GHz, and 5.47-5.725 GHz, the above procedures make use of 1 MHz RBW to satisfy directly the 1 MHz reference bandwidth specified in § 15.407(a)(5). For devices operating in the band 5.725-5.85 GHz, the rules specify a measurement bandwidth of 500 kHz. Many spectrum analyzers do not have 500 kHz RBW, thus a narrower RBW may need to be used. The rules permit the use of a RBWs less than 1 MHz, or 500 kHz, "provided that the measured power is integrated over the full reference bandwidth" to show the total power over the specified measurement bandwidth (i.e., 1 MHz, or 500 kHz). If measurements are performed using a reduced resolution bandwidth (< 1 MHz, or < 500 kHz) and integrated over 1 MHz, or 500 KHz bandwidth, the following adjustments to the procedures apply:

a) Set RBW ≥ 1/T, where T is defined in section II.B.I.a).

b) Set VBW ≥ 3 RBW.

c) If measurement bandwidth of Maximum PSD is specified in 500 kHz, add 10log(500kHz/RBW) to the measured result, whereas RBW (< 500 KHz) is the reduced resolution bandwidth of the spectrum analyzer set during measurement.

d) If measurement bandwidth of Maximum PSD is specified in 1 MHz, add 10log(1MHz/RBW) to the measured result, whereas RBW (< 1 MHz) is the reduced resolution bandwidth of spectrum analyzer set during measurement.

e) Care must be taken to ensure that the measurements are performed during a period of continuous transmission or are corrected upward for duty cycle.

Note: As a practical matter, it is recommended to use reduced RBW of 100 KHz for the sections 5.c) and 5.d) above, since RBW=100 KHZ is available on nearly all spectrum analyzers.

4.3 DEVIATION FROM STANDARD

No deviation.

4.4 TEST SETUP

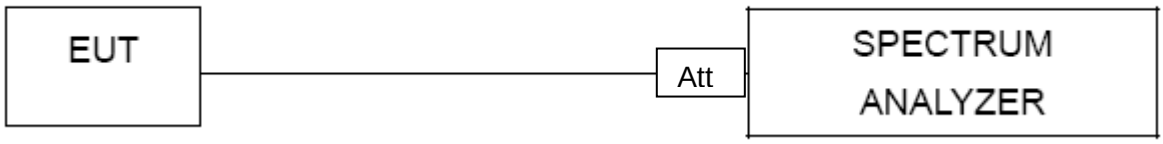

4.5 EUT OPERATION CONDITIONS

The EUT tested system was configured as the statements of 2.1 Unless otherwise a special operating condition is specified in the follows during the testing.

4.6 TEST RESULTS

EUT：	Docking Station	Model Name ：	PCDock
Temperature：	26 ℃	Relative Humidity：	54%
Pressure：	1015 hPa	Test Voltage ：	DC 5V powered by Adapter AC 120V/60Hz
Test Mode ：	TX Frequency Band 1 (5150-5250MHz), Band 2 (5745-5825MHz)		

Refer to section 5 of this report:
For 5G band. Directional gain=8.89dBi; 6.0dBi<8.89dBi

Note:
For ANT1 6.33 dBi＞6.0 dBi so power limit is limit= 11-(6.33-6)=10.67 in dBm
For 5G has MIMO mode. Directional gain=8.89 dBi
8.89 dBi > 6.0 dBi so power limit is limit= 11-(8.89-6)=8.11 in dBm
For 5.8G has MIMO mode. Directional gain=8.89 dBi
8.89 dBi > 6.0 dBi so power limit is limit= 30-(8.89-6)=27.11 in dBm

Test data reference attachment.

5. 26DB & 99% EMISSION BANDWIDTH

5.1 APPLIED PROCEDURES / LIMIT

The maximum power spectral density is measured as a conducted emission by direct connection of a calibrated test instrument to the equipment under test. If the device cannot be connected directly, alternative techniques acceptable to the Commission may be used. Measurements in the 5.725-5.85 GHz band are made over a reference bandwidth of 500 kHz or the 26 dB emission bandwidth of the device, whichever is less. Measurements in the 5.15-5.25 GHz, 5.25-5.35 GHz, and the 5.47-5.725 GHz bands are made over a bandwidth of 1 MHz or the 26 dB emission bandwidth of the device, whichever is less. A narrower resolution bandwidth can be used, provided that the measured power is integrated over the full reference bandwidth.

5.2 TEST PROCEDURE

a) Set RBW = approximately 1% of the emission bandwidth.
b) Set the VBW > RBW.
c) Detector = Peak.
d) Trace mode = max hold.
e) Measure the maximum width of the emission that is 26 dB down from the maximum of the emission. Compare this with the RBW setting of the analyzer. Readjust RBW and repeat measurement as needed until the RBW/EBW ratio is approximately 1%.

The following procedure shall be used for measuring (99 %) power bandwidth:

1. Set center frequency to the nominal EUT channel center frequency.
2. Set span = 1.5 times to 5.0 times the OBW.
3. Set RBW = 1 % to 5 % of the OBW
4. Set VBW ≥ 3 · RBW
5. Video averaging is not permitted. Where practical, a sample detection and single sweep mode shall be used. Otherwise, peak detection and max hold mode (until the trace stabilizes) shall be used.
6. Use the 99 % power bandwidth function of the instrument (if available).
7. If the instrument does not have a 99 % power bandwidth function, the trace data points are recovered and directly summed in power units. The recovered amplitude data points, beginning at the lowest frequency, are placed in a running sum until 0.5 % of the total is reached; that frequency is recorded as the lower frequency. The process is repeated until 99.5 % of the total is reached; that frequency is recorded as the upper frequency. The 99% occupied bandwidth is the difference between these two frequencies.

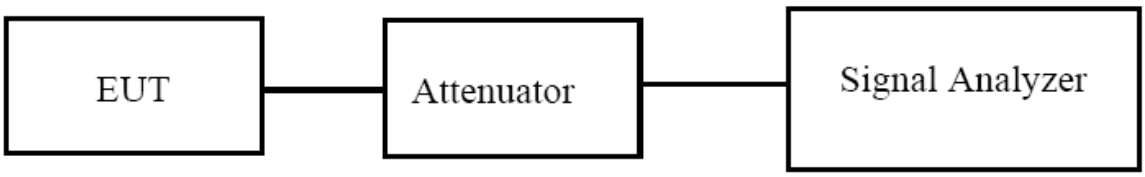

5.3 EUT OPERATION CONDITIONS

The EUT tested system was configured as the statements of 2.4 Unless otherwise a special operating condition is specified in the follows during the testing.

5.4 TEST RESULTS

EUT：	Docking Station	Model Name ：	PCDock
Temperature：	26 ℃	Relative Humidity：	54%
Pressure：	1012 hPa	Test Voltage ：	DC 5V powered by Adapter AC 120V/60Hz
Test Mode ：	TX Frequency Band 1 (5150-5250MHz), Band 2 (5745-5825MHz)		

Test data reference attachment.

6. MINIMUM 6 DB BANDWIDTH

6.1 APPLIED PROCEDURES / LIMIT

According to FCC §15.407(e)

(e) Within the 5.725-5.85 GHz band, the minimum 6 dB bandwidth of U-NII devices shall be at least 500 kHz.

6.2 TEST PROCEDURE

Section 15.407(e) specifies the minimum 6 dB emission bandwidth of at least 500 KHz for the band 5.715-5.85 GHz. The following procedure shall be used for measuring this bandwidth:

a) Set RBW = 100 kHz.

b) Set the video bandwidth (VBW) ≥ 3 × RBW.

c) Detector = Peak.

d) Trace mode = max hold.

e) Sweep = auto couple.

f) Allow the trace to stabilize.

g) Measure the maximum width of the emission that is constrained by the frequencies associated with the two outermost amplitude points (upper and lower frequencies) that are attenuated by 6 dB relative to the maximum level measured in the fundamental emission.

6.3 DEVIATION FROM STANDARD

No deviation.

6.4 TEST SETUP

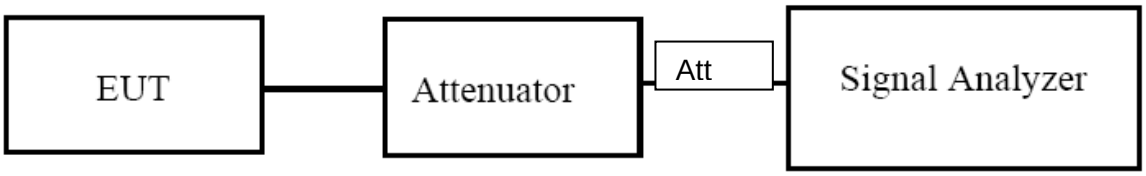

6.5 EUT OPERATION CONDITIONS

The EUT tested system was configured as the statements of 2.4 Unless otherwise a special operating condition is specified in the follows during the testing.

6.6 TEST RESULTS

EUT：	Docking Station	Model Name ：	PCDock
Temperature：	26 ℃	Relative Humidity：	54%
Pressure：	1012 hPa	Test Voltage ：	DC 5V powered by Adapter AC 120V/60Hz
Test Mode ：	TX (5G) Mode Frequency Band 2 (5725-5850MHz)		

Test data reference attachment.

7. MAXIMUM CONDUCTED OUTPUT POWER

7.1 PPLIED PROCEDURES / LIMIT

According to FCC §15.407

The maximum conduced output power should not exceed:

Frequency Band(MHz)	Limit
5150~5250	1W
5725~5850	1W

7.2 TEST PROCEDURE

· Method PM is Measurement using an RF average power meter. The procedure for this method is as follows:

a) Measurements may be performed using a wideband RF power meter with a thermocouple detector or equivalent if all of the following conditions are satisfied:

1) The EUT is configured to transmit continuously, or to transmit with a constant duty cycle.

2) At all times when the EUT is transmitting, it shall be transmitting at its maximum power control level.

3) The integration period of the power meter exceeds the repetition period of the transmitted signal by at least a factor of five.

b) If the transmitter does not transmit continuously, measure the duty cycle D of the transmitter output signal as described in 12.2.

c) Measure the average power of the transmitter. This measurement is an average over both the ON and OFF periods of the transmitter.

d) Adjust the measurement in dBm by adding [10 log (1 / D)], where D is the duty cycle {e.g., [10 log (1 / 0.25)], if the duty cycle is 25%}.

7.3 DEVIATION FROM STANDARD

No deviation.

7.4 TEST SETUP

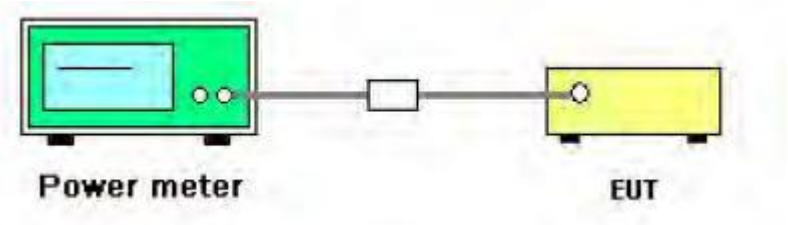

6.5 EUT OPERATION CONDITIONS

The EUT tested system was configured as the statements of 2.4 Unless otherwise a special operating condition is specified in the follows during the testing.

7.5 TEST RESULTS

EUT：	Docking Station	Model Name ：	PCDock
Temperature：	26 ℃	Relative Humidity：	54%
Pressure：	1012 hPa	Test Voltage ：	DC 5V powered by Adapter AC 120V/60Hz
Test Mode ：	TX Frequency Band 1 (5150-5250MHz), Band 2 (5745-5825MHz)		

Refer to section 5 of this report:

For 5G band. Directional gain=8.89dBi; 8.89dBi > 6.0dBi

Note:

For ANT1 6.33 dBi＞6.0 dBi so power limit is limit= 24-(6.33-6)=23.67 in dBm

For 5.2G has MIMO mode. Directional gain=8.89 dBi

8.89 dBi > 6.0 dBi so power limit is limit= 24-(8.89-6)=21.11 in dBm

For 5.8G has MIMO mode. Directional gain=8.89 dBi

8.89 dBi > 6.0 dBi so power limit is limit= 30-(8.89-6)=27.11 in dBm

Test data reference attachment.

8. OUT OF BAND EMISSIONS

8.1 APPLICABLE STANDARD

According to FCC §15.407(b)

Undesirable emission limits. Except as shown in paragraph (b)(7) of this section, the maximum emissions outside of the frequency bands of operation shall be attenuated in accordance with the following limits:

(1) For transmitters operating in the 5.15-5.25 GHz band: All emissions outside of the 5.15-5.35 GHz band shall not exceed an e.i.r.p. of −27 dBm/MHz.

(2) For transmitters operating in the 5.725-5.85 GHz band: For transmitters operating in the 5.725-5.85 GHz band: All emissions shall be limited to a level of −27 dBm/MHz at 75 MHz or more above or below the band edge increasing linearly to 10 dBm/MHz at 25 MHz above or below the band edge, and from 25 MHz above or below the band edge increasing linearly to a level of 15.6 dBm/MHz at 5 MHz above or below the band edge, and from 5 MHz above or below the band edge increasing linearly to a level of 27 dBm/MHz at the band edge.

8.2 TEST PROCEDURE

1. Check the calibration of the measuring instrument using either an internal calibrator or a known signal from an external generator.
2. Position the EUT without connection to measurement instrument. Turn on the EUT and connect its antenna terminal to measurement instrument via a low loss cable. Then set it to any one measured frequency within its operating range, and make sure the instrument is operated in its linear range.
3. Set RBW of spectrum analyzer to 1 MHz with a convenient frequency span.
4. Measure the highest amplitude appearing on spectral display and set it as a reference level. Plot the graph with marking the highest point and edge frequency.
5. Repeat above procedures until all measured frequencies were complete.

8.3 DEVIATION FROM STANDARD

No deviation.

8.4 TEST SETUP

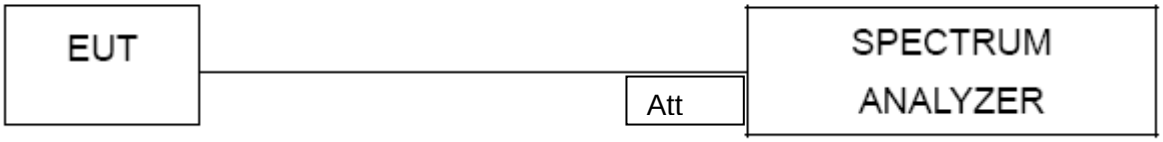

8.5 EUT OPERATION CONDITIONS

The EUT tested system was configured as the statements of 2.4 Unless otherwise a special operating condition is specified in the follows during the testing.

8.6 TEST RESULTS

EUT：	Docking Station	Model Name ：	PCDock
Temperature：	26 ℃	Relative Humidity：	54%
Pressure：	1012 hPa	Test Voltage ：	DC 5V powered by Adapter AC 120V/60Hz

Test data reference attachment.

9. Frequency Stability Measurement

9.1 LIMIT

Manufactures of U-NII devices are responsible for ensuring frequency stability such that an emission is maintained within the band of operation under all conditions of normal operation as specified in the user's manual.

9.2 TEST PROCEDURES

1. The transmitter output (antenna port) was connected to the spectrum analyzer.
2. EUT have transmitted absence of modulation signal and fixed channelize.
3. Set the spectrum analyzer span to view the entire absence of modulation emissions bandwidth.
4. Set RBW = 10 kHz, VBW = 10 kHz with peak detector and maxhold settings.
5. fc is declaring of channel frequency. Then the frequency error formula is (fc-f)/fc × 10_6 ppm and the limit is less than ±20ppm (IEEE 802.11nspecification).
6. The test extreme voltage is to change the primary supply voltage from 85 to 115 percent of the nominal value
7. Extreme temperature is -20°C~70°C.

9.3 TEST SETUP LAYOUT

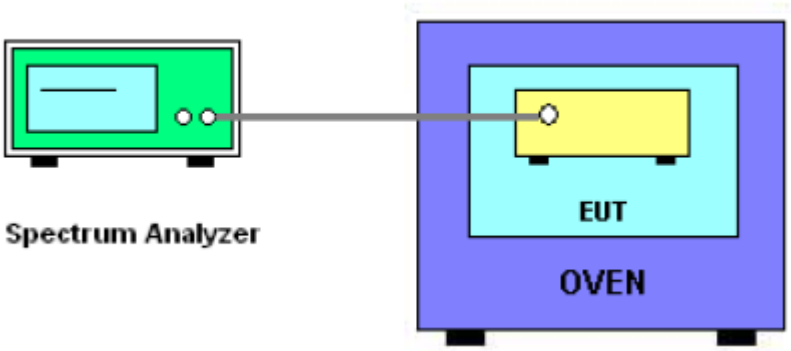

9.4 EUT OPERATION DURING TEST

1. The EUT was programmed to be in continuously un-modulation transmitting mode.
2. The has two antennas, and the worst data is Antenna 1, only shown Antenna 1 Plot.

9.5 TEST RESULTS

EUT :	Docking Station	Model Name. :	PCDock
Temperature :	25 ℃	Relative Humidity :	56%
Pressure :	1012 hPa	Test Voltage :	DC 5V powered by Adapter AC 120V/60Hz
Test Mode :	TX Frequency Band I (5150-5250MHz)		

Note: 1,2 Represent the value of antenna 1 and 2,The worst data is Antenna 2,only shown Antenna 2 data

Voltage vs. Frequency Stability

TEST CONDITIONS				Reference Frequency：5180MHz			
				f	fc	Max. Deviation (MHz)	Max. Deviation (ppm)
T nom (°C)	20	V nom (V)	5	5180.0242	5180	0.0242	4.6718
		V max (V)	5.5	5180.0161	5180	0.0161	3.1071
		V min (V)	4.5	5180.0163	5180	0.0163	3.1376
Limits				Within 5150-5250MHz			
Result				Complies			

Temperature vs. Frequency Stability

TEST CONDITIONS				Reference Frequency：5180MHz			
				f	fc	Max. Deviation (MHz)	Max. Deviation (ppm)
V nom (V)	5	T (°C)	-20	5180.0131	5180	0.0131	2.5276
		T (°C)	-10	5180.0135	5180	0.0135	2.6005
		T (°C)	0	5180.0272	5180	0.0272	5.2537
		T (°C)	10	5180.0156	5180	0.0156	3.0034
		T (°C)	20	5180.0139	5180	0.0139	2.6851
		T (°C)	30	5180.0154	5180	0.0154	2.9787
		T (°C)	40	5180.0137	5180	0.0137	2.6440
		T (°C)	50	5180.0163	5180	0.0163	3.1495
		T (°C)	60	5180.0180	5180	0.0180	3.4765
		T (°C)	70	5180.0137	5180	0.0137	2.6429
Limits				Within 5150-5250MHz			
Result				Complies			

Voltage vs. Frequency Stability

TEST CONDITIONS				Reference Frequency：5200MHz			
				f	fc	Max. Deviation (MHz)	Max. Deviation (ppm)
T nom (°C)	20	V nom (V)	5	5200.0113	5200	0.0113	2.1645
		V max (V)	5.5	5200.0131	5200	0.0131	2.5196
		V min (V)	4.5	5200.0130	5200	0.0130	2.5000
Limits				Within 5150-5250MHz			
Result				Complies			

Temperature vs. Frequency Stability

TEST CONDITIONS				Reference Frequency：5200MHz			
				f	fc	Max. Deviation (MHz)	Max. Deviation (ppm)
V nom (V)	5	T (°C)	-20	5200.0309	5200	0.0309	5.9461
		T (°C)	-10	5200.0123	5200	0.0123	2.3635
		T (°C)	0	5200.0309	5200	0.0309	5.9493
		T (°C)	10	5200.0205	5200	0.0205	3.9414
		T (°C)	20	5200.0132	5200	0.0132	2.5469
		T (°C)	30	5200.0121	5200	0.0121	2.3244
		T (°C)	40	5200.0178	5200	0.0178	3.4322
		T (°C)	50	5200.0172	5200	0.0172	3.3067
		T (°C)	60	5200.0128	5200	0.0128	2.4588
		T (°C)	70	5200.0122	5200	0.0122	2.3401
Limits				Within 5150-5250MHz			
Result				Complies			

Voltage vs. Frequency Stability

TEST CONDITIONS				Reference Frequency：5240MHz			
				f	fc	Max. Deviation (MHz)	Max. Deviation (ppm)
T nom (°C)	20	V nom (V)	5	5240.0114	5240	0.0114	2.1756
		V max (V)	5.5	5240.0171	5240	0.0171	3.2634
		V min (V)	4.5	5240.0154	5240	0.0154	2.9389
Limits				Within 5150-5250MHz			
Result				Complies			

Temperature vs. Frequency Stability

TEST CONDITIONS				Reference Frequency：5240MHz			
				f	fc	Max. Deviation (MHz)	Max. Deviation (ppm)
V nom (V)	5	T (°C)	-20	5240.0112	5240	0.0112	2.1329
		T (°C)	-10	5240.0153	5240	0.0153	2.9224
		T (°C)	0	5240.0151	5240	0.0151	2.8906
		T (°C)	10	5240.0228	5240	0.0228	4.3433
		T (°C)	20	5240.0122	5240	0.0122	2.3376
		T (°C)	30	5240.0144	5240	0.0144	2.7492
		T (°C)	40	5240.0174	5240	0.0174	3.3286
		T (°C)	50	5240.0163	5240	0.0163	3.1106
		T (°C)	60	5240.0125	5240	0.0125	2.3785
		T (°C)	70	5240.0110	5240	0.0110	2.0967
Limits				Within 5150-5250MHz			
Result				Complies			

EUT :	Docking Station	Model Name. :	PCDock
Temperature :	25 ℃	Relative Humidity :	56%
Pressure :	1012 hPa	Test Voltage :	DC 5V powered by Adapter AC 120V/60Hz
Test Mode :	TX Frequency(5745-5850MHz)		

Voltage vs. Frequency Stability

TEST CONDITIONS				Reference Frequency：5745MHz			
				f	fc	Max. Deviation (MHz)	Max. Deviation (ppm)
T nom (°C)	20	V nom (V)	5	5745.0138	5745	0.0138	2.4074
		V max (V)	5.5	5745.0208	5745	0.0208	3.6144
		V min (V)	4.5	5745.0207	5745	0.0207	3.6078
Limits				Within 5745-5850MHz			
Result				Complies			

Temperature vs. Frequency Stability

TEST CONDITIONS				Reference Frequency：5745MHz			
				f	fc	Max. Deviation (MHz)	Max. Deviation (ppm)
V nom (V)	5	T (°C)	-20	5745.0196	5745	0.0196	3.4093
		T (°C)	-10	5745.0181	5745	0.0181	3.1449
		T (°C)	0	5745.0115	5745	0.0115	2.0038
		T (°C)	10	5745.0133	5745	0.0133	2.3108
		T (°C)	20	5745.0107	5745	0.0107	1.8611
		T (°C)	30	5745.0119	5745	0.0119	2.0790
		T (°C)	40	5745.0162	5745	0.0162	2.8225
		T (°C)	50	5745.0160	5745	0.0160	2.7907
		T (°C)	60	5745.0145	5745	0.0145	2.5257
		T (°C)	70	5745.0123	5745	0.0123	2.1450
Limits				Within 5745-5850MHz			
Result				Complies			

Voltage vs. Frequency Stability

TEST CONDITIONS				Reference Frequency：5785MHz			
				f	fc	Max. Deviation (MHz)	Max. Deviation (ppm)
T nom (°C)	20	V nom (V)	5	5785.0147	5785	0.01466	-2.5339
		V max (V)	5.5	5785.0126	5785	0.01260	-2.1787
		V min (V)	4.5	5785.0125	5785	0.01254	-2.1681
Limits				Within 5745-5850MHz			
Result				Complies			

Temperature vs. Frequency Stability

TEST CONDITIONS				Reference Frequency：5785MHz			
				f	fc	Max. Deviation (MHz)	Max. Deviation (ppm)
V nom (V)	5	T (°C)	-20	5785.0106	5785	0.0106	1.8409
		T (°C)	-10	5785.0129	5785	0.0129	2.2239
		T (°C)	0	5785.0159	5785	0.0159	2.7569
		T (°C)	10	5785.0091	5785	0.0091	1.5651
		T (°C)	20	5785.0138	5785	0.0138	2.3833
		T (°C)	30	5785.0105	5785	0.0105	1.8217
		T (°C)	40	5785.0080	5785	0.0080	1.3816
		T (°C)	50	5785.0122	5785	0.0122	2.1090
		T (°C)	60	5785.0155	5785	0.0155	2.6737
		T (°C)	70	5785.0153	5785	0.0153	2.6446
Limits				Within 5745-5850MHz			
Result				Complies			

Voltage vs. Frequency Stability

TEST CONDITIONS				Reference Frequency：5825MHz			
				f	fc	Max. Deviation (MHz)	Max. Deviation (ppm)
T nom (°C)	20	V nom (V)	5	5825.0116	5825	0.0116	1.9947
		V max (V)	5.5	5825.0173	5825	0.0173	2.9635
		V min (V)	4.5	5825.0172	5825	0.0172	2.9444
Limits				Within 5745-5850MHz			
Result				Complies			

Temperature vs. Frequency Stability

TEST CONDITIONS				Reference Frequency：5825MHz			
				f	fc	Max. Deviation (MHz)	Max. Deviation (ppm)
V nom (V)	5	T (°C)	-20	5825.0091	5825	0.0091	1.5595
		T (°C)	-10	5825.0147	5825	0.0147	2.5252
		T (°C)	0	5825.0109	5825	0.0109	1.8710
		T (°C)	10	5825.0081	5825	0.0081	1.3933
		T (°C)	20	5825.0090	5825	0.0090	1.5467
		T (°C)	30	5825.0168	5825	0.0168	2.8840
		T (°C)	40	5825.0150	5825	0.0150	2.5680
		T (°C)	50	5825.0091	5825	0.0091	1.5601
		T (°C)	60	5825.0163	5825	0.0163	2.8048
		T (°C)	70	5825.0136	5825	0.0136	2.3328
Limits				Within 5745-5850MHz			
Result				Complies			

10. ANTENNA REQUIREMENT

10.1 STANDARD REQUIREMENT

15.203 requirement: For intentional device, according to 15.203: an intentional radiator shall be designed to ensure that no antenna other than that furnished by the responsible party shall be used with the device.

10.2 EUT ANTENNA

The EUT antenna is permanent attached Antenna 1: FPCB Antenna (Gain:6.33dBi), Antenna 2: FPCB Antenna (Gain:5.38dBi).
It comply with the standard requirement.

END OF REPORT